CITY of CAPE GIRARDEAU

DEVELOPMENT SERVICES

# Development Manual

***REVISED JULY 2015***

**CONTACT INFORMATION**

Development Services Department
401 Independence St.
Cape Girardeau, MO 63703
573-339-6327

Molly Hood, AICP – Deputy City Manager
Casey Brunke, PE – City Engineer
Anna Kangas, AIA – Building and Code Enforcement Manager
Ryan Shrimplin, AICP – City Planner

# TABLE OF CONTENTS

**Procedures**

Subdivision Plat ..... 5
Rezoning/Special Use Permit Request Procedures ..... 6
Site Plan ..... 7
Infrastructure Improvements/Relocations/Modifications ..... 8
Work Guarantee Process ..... 9
Easement Process ..... 10
Stormwater Management Permit ..... 11
Floodplain Development Permit ..... 12
Commercial/Multifamily Building/Remodel Plan ..... 13
Residential Building/Remodel Plan ..... 14
License and Indemnity Agreement Procedures ..... 15
Vacation of Right-Of-Way or Easement ..... 16
Adjustment of Property/Lot Lines ..... 17
Local Historic Landmark Designation Process ..... 18
Local Historic District Designation Process ..... 19
Certificate of Appropriateness ..... 20
Central Business District- Building Modification ..... 21
Voluntary Annexation Procedures ..... 22

**Appendix A**

Street Addressing Procedures
Zoning Variance Request Procedures
Development Code Variance Request Procedures
Building Code Appeal Request Procedures
Subsurface Drainage within Rights-Of-Way

**Appendix B**

Comprehensive Permit List
Permit Description
Fee Schedule {Private}

**Appendix C**

List of Approved Manuals
Building Codes
Specifications and Standard Drawings
Other Helpful Resources
Computer-Aided Design Standards
Plan Review Check Lists

**Appendix D**

Construction Trades Licenses
Citizen Board and Commission Submittal Deadlines
Citizen Board and Commission Information

**Appendix E**

Permit Applications
Other Forms

# Subdivision Plat

## Preliminary Plat

Submittal:

1. Applicant submits two- 22” X 34”, one- 11” X 17”, one - 8.5” X 11” plats, to Planning Division. (3- Planning, 1- Engineering)

Review:

2. Plat is reviewed by Planning Division, Engineering Division, and Development Review Group. If any required changes are necessary, a letter will be sent to the Applicant.

Re-submittal:

3. Applicant submits four final corrected and signed plats. A letter shall accompany the plat and state the corrections made. (1- Applicant, 1- Vault, 1- Planning, 1- Hanging File)

Approval of Plat:

4. The plat is placed on the Planning and Zoning Commission agenda for recommendation. If the Commission’s approval is conditional, all corrections must be made and approved prior to the plat being submitted to City Council for approval. After all approvals have been received, the plat is recommended to City Council for approval by motion.

Final:

5. Four copies of the plat are forwarded to the City Clerk to be signed and sealed as approved. (1-Vault, 1- Applicant, 1-Planning, 1- Hanging File)

## Record Plat

Submittal:

1. Applicant submits two- 22” X 34”, one- 11” X 17”, one - 8.5” X “11” plats and appropriate fees to the Planning Division. (3- Planning, 1- Engineering)

Review:

2. Plat is reviewed by Planning Division, Engineering Division, and Development Review Group. If any required changes are necessary, a letter will be sent to the Applicant.

Re-submittal:

3. Applicant submits six final corrected and signed plats. A letter shall accompany the plat and state the corrections made.

Approval of Plans:

4. The plat is placed on the Planning and Zoning Commission agenda for recommendation. If the Commission’s approval is conditional, all corrections must be made and approved prior to the plat being submitted to City Council for approval. After all approvals have been received, the plat is recommended to City Council for approval by ordinance.

Final:

5. Six copies, signed by the Development Services Director (when ordinance takes effect), of the plat are forwarded to the City Clerk to be signed and sealed as approved. (2- County, 2- Applicant, 1- Inspections, 1-Vault)
6. After the Ordinance approving the record plat becomes effective, the plat is then filed with the Recorder of Deeds of Cape Girardeau County by the Planning Division. This must be done within sixty (60) days after approval by the City Council.
7. A digital exchange file (DXF) copy, and one .pdf format of the record plat is submitted to the Planning Division before the recorded plat is released.
8. The Applicant is then billed for the recording fees. Once the fees have been collected, the recorded plat is released to the Applicant and lots may be sold and building permits may be issued.

# Rezoning/Special Use Permit Request Procedures

Submittal:

1. One copy of the completed application form is to be returned to the Planning Division.

Review:

2. The application is reviewed by the Planning Division, the City Attorney, and the Development Review Group. If required changes are necessary, a letter will be sent to the Applicant.

Re-submittal:

3. The Applicant submits one Final corrected application. A letter shall accompany the application and state the corrections made.

Approval:

4. The application placed on the Planning and Zoning Commission agenda for their recommendation.
5. If the Planning and Zoning Commission recommends that the application is approved, a Public Hearing before City Council is set. Concurrently, the application is recommended to Council for approval by ordinance.
6. If the Planning and Zoning Commission recommends that the application be disapproved, the application is forwarded to the City Council at its next meeting. The Council has two options. The Council can set a public hearing on the application on its own, it can file the application for ten days, or the Applicant can request a public hearing.
7. If the Council files the application, the applicant has ten days in which to request a public hearing before the City Council, if they desire. The applicant is notified by letter of the Council's filing action and the ten day time period for the public hearing request. This notice is sent by the Planning Division. If the applicant does not request a public hearing within that time period, the application is deemed rejected

Final:

8. Special Use Permits are recorded with the County Recorder of Deeds Office by the Planning Division. Once the permit has been recorded, a copy is sent to the applicant by the Planning Division for their records. The use granted under a special use permit must be started within twelve months of the permit being approved, unless an extended period was granted with the permit. If it does not begin within that time period, the permit is void.
9. Rezoning applications are done by ordinance only. The ordinance goes into effect ten days after the second and third reading. The Planning Division mails a copy of the ordinance to the applicant.

# Site Plan

Submittal:

1. The Applicant submits signed application, permit fees, one set of site plans to the Inspections Division.

Review:

2. The site plans are reviewed by the Inspections Division. If any required changes are necessary, a letter will be sent to the Applicant.

Re-submittal:

3. The applicant submits three final corrected sets of site plans. A letter shall accompany the plans and state the corrections made. (1-Inspections, 1- Appropriate Inspector, 1-Applicant)

Other Permits:

4. If appropriate, other permits and legal documents shall be applied for.

Work Guarantee:

5. If building improvements are planned, all work shall be completed and approved before any occupancy permit is issued.

Approval of Plans:

6. After all approvals and appropriate permits have been received, the Inspections Division issues an approval letter to the Applicant along with 1 set of the approved plans. The Consultant Engineer, the Inspection Services Division, and the Stormwater Coordinator receive copies of the approval letter.

# Infrastructure (Streets, Water, Sanitary Sewer, and Storm Sewer) Improvements/Relocations/Modifications

Submittal:

1. The Applicant submits one set of improvement plans to Engineering Division. (if Stormwater or Floodplain permit is necessary, see appropriate section.)

Review:

2. The proposed water system will be modeled to determine feasibility and impacts.
3. Improvement plans are reviewed by the Engineering Division and the Development Review Group, where the City Engineer, the Public Works Director, and the Water Systems Manager (if applicable) approve the plans. If any required changes are necessary, a letter is sent to the Applicant.

Re-submittal:

4. The Applicant submits nine final corrected sets of improvement plans. A letter shall accompany the plans and state the corrections made. (1-Engineering, 1 Inspector, 3-MoDNR (sewer plans sent to Jefferson City), 2- MoDNR (water plans sent to Jefferson City), 1- Public Works, 1-Vault)
5. Inspection fees are estimated based on quantities and time.

Other Permits:

6. Three sets of Sewer Improvement plans, application, and State fees, paid by the Applicant, are sent, by the City, to the Missouri Department of Natural Resources (DNR) in Jefferson City for a sewer construction permit.
7. Two sets of Water Improvement plans, application, and State fees, paid by the Applicant, are sent, by the City, to the Missouri Department of Natural Resources (DNR) in Jefferson City for a water construction permit.
8. If appropriate, other permits and legal documents shall be applied for. See Check Lists.

Work Guarantee:

9. A Work Guarantee is required. See Escrow Agreement Section.

Approval of Plans:

10. After all approvals and appropriate permits have been received and estimated Inspection Fees have been paid, the Applicant may begin construction.

Construction and Inspection:

11. Engineering Division inspects the construction of the project and performs/observes appropriate tests.
12. The Water Division performs pressure tests, fire hydrant flow tests, and obtains health samples upon a request by the Engineering Division. The Water Division notifies the Engineering Division both verbally and in writing of the tests results.

Final:

13. The Applicant submits one set of the record drawings to the Engineering Division.
14. Record drawings are reviewed.
15. Applicant submits three final corrected sets of record plans, one Digital Exchange File (DXF) copy, and one compact disk with .pdf format of the improvements are submitted to the Engineering Division. (1-Engineering, 1- Public Works; 1- Vault)
16. The remainder of actual Inspection fees based on actual inspection time will be collected or refunded to Applicant.
17. The improvements are recommended to City Council for acceptance by motion.

# Work Guarantee Process

Improvements must be guaranteed until accepted by Council either by an Escrow Agreement or the City may hold the record plat.

**ESCROW AGREEMENT**

Submittal:

1. The Applicant submits three original copies of an escrow agreement and letter of credit or other form of surety to the Planning Division. (1- Bank, 1- Vault, 1- Applicant)

Review:

2. The escrow agreement and the form of surety are reviewed by the Planning Division and forwarded to the City Attorney for review.

Approval:

3. The escrow is recommended to the Council to be approved by Resolution.
4. Once approved, the City Manager signs all copies of the escrow agreement and letters of credit and returns to the Planning Division for recording

Final:

5. One original copy in vault; one original copy sent to escrow agent; one original copy sent to Applicant. Copies of the documents are made for the Planning Division records and the Engineering Division records.

Release:

6. Release of escrow is recommended to City Council by motion.
7. The Planning Division prepares a Release of Escrow for the City Manager to sign.
8. One original copy in vault; one original copy to escrow agent; one copy to Applicant. Copies are made for the Planning Division records and the Engineering Division records.

**RECORD PLAT**

If the Applicant chooses not to Escrow the Improvements, the record plat will be held until the City Council accepts the Improvements.

# Easement Process

If improvements are in a subdivision, the right-of-way and easements are dedicated on the record plat. If improvements are not in a subdivision, the right-of-way and easements shall be granted by deed or separate document and accepted by City Council as part of the improvement.

Submittal:

1. The Applicant submits one copy of Exhibit and Legal Description to the Planning Division.

Review:

2. The Exhibit and Legal Description are reviewed by the Planning Division, Engineering Division and the Development Review Group. If any required changes are necessary, a letter will be sent to the Applicant.

Re-submittal:

3. The Applicant submits one final corrected Legal Description and Exhibit and Digital Exchange File (DXF) file of exhibit. A letter shall accompany the documents and state the corrections made.

Approval of Easement:

4. The easement documents are recommended to City Council for acceptance by ordinance.

Final:

5. After the Ordinance accepting the easement becomes effective, the easement is then filed with the Recorder of Deeds of Cape Girardeau County by the Planning Division. This must be done within sixty days after approval by the City Council.
6. The Applicant is then billed for the recording fees. Once the fees have been collected, the recorded easement is released to the Applicant. (1 Original- Vault, 1 Copy- Applicant, 1 Copy- Planning, 1 Copy- Engineering)

# Stormwater Management Permit

Applicant may include this submittal with the Site Plan.

Submittal:

1. The Applicant submits signed application, permit fees, one set of improvement plans, and one Stormwater Pollution Protection Plan (SWPPP) to the Inspections Division.

Review:

2. The improvement plans are reviewed by the Inspections Division and the Stormwater Coordinator. If any required changes are necessary, a letter will be sent to the Applicant.

Re-submittal:

3. The applicant submits four final corrected sets of improvement plans. A letter shall accompany the plans and state the corrections made. (1-Inspections, 1- Appropriate Inspector, 2-Applicant)

Other Permits:

4. If appropriate, other permits and legal documents shall be applied for.

Work Guarantee:

5. If building improvements are planned, all work shall be completed and approved before any occupancy permit is issued.

Approval of Plans:

6. After all approvals and appropriate permits have been received the Inspections Division issues a permit and approval letter to the Applicant along with 2 sets of the approved plans. The Consultant Engineer and the Stormwater Coordinator receive copies of the permit and approval letter.

Construction and Inspection:

7. The Engineering Division inspects the construction of the project if it is included in the improvements of a Subdivision.
8. The Stormwater Coordinator inspects the construction of the project if it is included in the improvements of a single commercial development.
9. The Inspection Services Division inspects the construction of the project if it is included in the improvements of a single residential development.

Final:

10. Applicant submits one set of the record drawings to the Inspections Division. The Consultant certifies that the improvements have been constructed in conformance with the approved drawings.
11. Record drawings are reviewed.
12. Applicant submits two final corrected sets of record plans, one Digital Exchange File (DXF) copy, and one compact disk with .pdf format of the improvements and the stormwater report are submitted to the Inspections Division. (1- Inspections, 1- Vault)

# Floodplain Development Permit

Applicant may include this submittal with the Site Plan.

Submittal:

1. The Applicant submits signed application, permit fees, and one set of improvement plans to the Inspections Division.

Review:

2. The improvement plans are reviewed by the Inspections Division and the Stormwater Coordinator. If any required changes are necessary, a letter will be sent to the Applicant.

Re-submittal:

3. The applicant submits four final corrected sets of improvement plans. A letter shall accompany the plans and state the corrections made. (1-Inspections, 1- Appropriate Inspector, 2-Applicant)
4. The Inspection fees are estimated based on quantities.

Other Permits:

5. If appropriate, other permits and legal documents shall be applied for.

Work Guarantee:

6. If building improvements are planned, all work shall be completed and approved before any occupancy permit is issued.

Approval of Plans:

7. After all approvals and appropriate permits have been received the Inspections Division issues a permit and approval letter to the Applicant along with two sets of the approved plans. The Consultant Engineer and Stormwater Coordinator receive copies of the permit and approval letter.

Construction and Inspection:

8. The Engineering Division inspects the construction of the project if it is included in the improvements of a Subdivision.
9. The Stormwater Coordinator inspects the construction of the project if it is included in the improvements of a single commercial development.
10. The Inspections Services Division inspects the construction of the project if it is included in the improvements of a single residential development.

Final:

11. The Applicant submits two sets of the record drawings and elevation certificate, if applicable, to the Inspections Division. The Consultant certifies that the improvements have been constructed in conformance with the approved drawings.
12. Record drawings and/or elevation certificates are reviewed.
13. Applicant submits one final corrected set of record plans, one Digital Exchange File (DXF) copy, and one compact disk with .pdf format of the improvements and the elevation certificate are submitted to the Inspections Division.

Letters of Map Revision (LOMR)

1. If Applicant requests Federal Emergency Management Agency (FEMA) for issuance of a LOMR, then the Inspections Division reviews and files the documentation, including information that the structure is at or above the Base Flood Elevation (BFE). FEMA is responsible for issuance of LOMR.

# Commercial/Multifamily Building/Remodel Plan

Zoning for the proposed building/remodel is reviewed. The Inspection Services Division provides the applicant with a list of additional permits and fees that might be required for the completion of the project and issuance of the Certificate of Occupancy.

Submittal:

1. The applicant shall submit signed application and three sets of plans to the Inspection Services Division. (1-Inspections, 1-Fire Marshal, 1-Applicant)
    - If Commercial Building/Remodel plan includes food preparation use, applicant shall submit one additional set of plans. (1-County Health Department)
    - If the building or a portion thereof will be used as a State licensed daycare facility, applicant shall submit one additional set of plans. (1- State Fire Marshal)

Review:

2. The building plans are reviewed by the Inspection Services Division and the Fire Marshal. Additionally, the County Health Department and State Fire Marshal shall review building plans if building use requires their approval. If any changes are necessary, the Inspection Services Division will send a letter to the applicant.
3. The site plan if applicable is reviewed by the Development Review Group. If any changes are necessary, site plan comments shall be included in the letter that will be sent to the applicant.

Re-submittals:

4. The Applicant submits three final corrected sets of plans and a letter stating the corrections made. (1-Inspections, 1-Fire Marshal, 1-Applicant)

Other Permits:

5. A building permit shall not be issued until all other required permits and legal documents are acquired.

Work Guarantee:

6. Certificate of Occupancy is not issued until work is inspected and meets required standards.

Approval of Plans:

7. If the plans are approved, the applicant is notified. The applicant pays the Plan Review fees and all fees for necessary permits included in the building process. The Building Permit and Approved Set of Plans are issued to the licensed construction contractor. An Approved Set of Plans shall be retained at the job site for use by the City Inspectors. The remaining set is filed in the Inspection Services Office.

Construction and Inspection:

8. The Inspection Services Division inspects the construction of the project and performs/observes appropriate tests. Additionally, the Fire Marshal and County Health Department, where applicable, inspects the facility.

Final:

9. Inspection Services reviews the project to ensure that all applicable inspections and certificates have been obtained.
10. Certificate of Occupancy is issued.

# Residential Building/Remodel Plan

Zoning for the proposed building/remodel is reviewed. The Inspection Services Division provides the applicant with a list of additional permits and fees that might be required for the completion of the project and issuance of the Certificate of Occupancy.

Submittal:

1. The applicant shall submit signed application and two sets of plans to the Inspection Services Division. (1-Inspections, 1-Fire Marshal)
2. The applicant shall meet with the Fire Marshal to learn about optional sprinkler systems. If applicant opts out of building sprinkler systems in the building, then the applicant must sign a waiver.

Review:

3. The building plans are reviewed by the Inspection Services Division and the Fire Marshal. If any changes are necessary, the Inspection Services Division will send a letter to the applicant.

Re-submittals:

4. The Applicant submits two final corrected sets of plans and a letter stating the corrections made. (1-Inspections, 1-Applicant)

Other Permits:

5. A building permit shall not be issued until all other required permits and legal documents are acquired.

Work Guarantee:

6. Certificate of Occupancy is not issued until work is inspected and meets required standards.

Approval of Plans:

7. If the plans are approved, the applicant is notified. The applicant pays the Plan Review fees and all fees for necessary permits included in the building process. The Building Permit and Approved Set of Plans are issued to the licensed construction contractor. An Approved Set of Plans shall be retained at the job site for use by the City Inspectors. The remaining set is filed in the Inspection Services Office.

Construction and Inspection:

8. The Inspection Services Division inspects the construction of the project and performs/observes appropriate tests. Additionally, the Fire Marshal, where applicable, inspects the facility.

Final:

9. The Inspection Services Division reviews the project to ensure that all applicable inspections and certificates have been obtained.
10. Certificate of Occupancy is issued.

# License and Indemnity Agreement Procedures

Submittal:

1. The Applicant submits signed License and Indemnity Agreement to the Engineering Division.

Review:

2. The Engineering Division reviews to determine if the License and Indemnity Agreement is in the public interest. The request is reviewed by the Development Review Group and the agreement is reviewed by the City Attorney. If any required changes are necessary, a letter will be sent to the Applicant.

Approval:

3. If the agreement is sufficient, it is recommended to the City Council for approval by motion.

Final:

4. The agreement will be sent to the County Recorder's office to be recorded by the Engineering Division.
5. The Recording Fee will be the responsibility of the Applicant.

# Vacation of City Right-Of-Way or Easement

Submittal:

1. The Applicant submits signed Petition to the Engineering Division.

Review:

2. The Engineering Division will review to determine if this vacation is in the public interest and that all adjoining owners are represented on the petition. The Petition is reviewed by the Development Review Group. If any required changes are necessary, a letter will be sent to the Applicant.
3. Utilities will be contacted by letter to determine if they have a utility interest in the area of the request. If there are utilities located within the requested area of vacation and an easement may be retained for such utilities, the process may continue. If no easement is allowable, or the petition is not valid, the city will not be able to proceed with the request.

Approval:

4. If the petition is sufficient and there are no utility interests in the property, the City will hold a public hearing to consider vacating the city street or city's interest in any real estate. The public hearing will be conducted at a scheduled regular Council Meeting. A Notice of Public Hearing must be published in a local newspaper ten days prior to the Public Hearing. The Petition is recommended to the City Council for approval of the ordinance.

Final:

5. The ordinance will be sent to the County Recorder's office to be recorded by Engineering Services.
6. The Cost of Advertising and the Recording Fee will be the responsibility of the Applicant making the request.

# Adjustment of Property/Lot Lines

Formal subdivision plats are not required when a property line is adjusted between two parcels of land. However, the City does require that a plat of the survey used to transfer the property segment(s) be submitted. This simplified method can be used provided that no additional lots are created and no original lot is reduced below the minimum size required by the Subdivision Regulations or the Zoning Ordinance.

Submittal:

1. The Applicant submits two - 22" X 34", one - 11" X 17", one - 8.5" X 11" sets of plats to the Planning Division. (4- Planning, 1- Engineering) The following language shall be shown on the plat:
    - ***SURVEY PLAT OF SALE/EXCHANGE OF PARCELS BETWEEN ADJOINING LOTS WHERE RECORDING OF A PLAT IS NOT REQUIRED. Under provisions of Section 25-13, Chapter 25, Cape Girardeau Code of Ordinances.***
    - The description for the first parcel should include the property to be transferred from the second parcel.
    - The description for the second parcel should exclude the property to be transferred to the first parcel.
    - A description of the property being transferred may be included.

Review:

2. The Plat is reviewed by the Planning Division, the Engineering Division, and Development Review Group. If any required changes are necessary, a letter will be sent to the Applicant.

Re-submittal:

3. The Applicant submits six final corrected sets of plans. A letter shall accompany the plans and state the corrections made.

Approval of Plans:

4. The property /lot line adjustment plat is stamped and approved by the Development Services Director.

Final:

5. Six copies, signed by the Development Services Director, of the plat are forwarded to the City Clerk to be signed and sealed as approved. (2- County, 2- Applicant, 1- Inspections, 1-Vault)
6. The plat is then filed with the Recorder of Deeds of Cape Girardeau County by the Planning Division.
7. A digital exchange file (DXF) copy and one compact disk with .pdf format of the record plat are submitted to the Planning Division before the plat is released.
8. The digital exchange file (DXF) copy of the recorded plat is sent to the GIS Coordinator and to County Mapping and Appraisal Office.
9. One copy of the signed plat is placed in the vault by the Planning Division for permanent record.
10. The second copy of the recorded plat is addressed by the Planning Division and forwarded to the Inspection Services Division for their records.

**Planning Division**
**(Historic Preservation Commission)**

# Local Historic Landmark Designation Process

Submittal:

1. The Applicant submits one completed application and proposed design guidelines to the Planning Division.

Review:

2. The application and design guidelines are reviewed by the Planning Division and the Historic Preservation Commission (HPC) for preliminary review. The applicant is requested to be present at the meeting to answer any questions. If additional information is needed a historic preservation professional for the Department of History at Southeast Missouri University may be asked to assist with the application.
3. If no additional documentation is needed and the information is deemed accurate, HPC will set the date for a Public Hearing, normally the next regularly scheduled meeting.

Approval of Application:

4. The application is recommended to HPC for adoption by resolution. If approved, the application is forwarded to the Planning and Zoning Commission. The application then follows the steps adopted by the Planning and Zoning Commission for zoning applications. (Historic Landmark Zoning is regarded as an overlay zone and does not change the primary zoning use of the property.)
5. The Planning and Zoning Commission holds a Public Meeting and makes a recommendation for approval or denial to the City Council.
6. If approved, the City Council adopts by ordinance.

Final:

7. A copy of each designating ordinance is sent to HPC, the Planning and Zoning Commission and to the Planning Division as well as to the owner(s) of the property(ies).
8. A copy of the design guidelines is recorded with the County Recorder of Deeds by the Planning Division. The Cost of Advertising and the Recording Fee will be the responsibility of the Applicant making the request.
9. Once adopted by the City Council as a local landmark, a plaque provided by the Historic Preservation Commission is placed on the property in an appropriate location, signifying its significance as a local landmark.

# Local Historic District Designation Process

The Property Owners set the District Boundaries, the Design Guidelines, and circulates the petition. The Applicant meets with the Planning Division to discuss the request.

Submittal:

1. The Applicant submits one completed application, Design Guidelines, and Petition (signed by at least 51% of the property owners within the District) to the Planning Division.

Review:

2. The Application is reviewed by the Planning Division. If any required changes are necessary, a letter will be sent to the applicant.
3. The Application is recommended to the Historic Preservation Commission (HPC) for preliminary review. The applicant is requested to be present at the meeting to answer any questions. If additional information is needed a historic preservations professional for the Department of History at Southeast Missouri University may be asked to assist with the application.
4. If no additional documentation is needed and the information is deemed accurate, HPC will set the date for a Public Hearing, normally the next regularly scheduled meeting.

Approval of Application:

5. The application is recommended to HPC for adoption by resolution. If approved, the application is forwarded to Planning and Zoning Commission. The application then follows the steps adopted by the Planning and Zoning Commission for zoning applications. (Historic Landmark Zoning is regarded as an overlay zone and does not change the primary zoning use of the property.)
6. The Planning and Zoning Commission holds a Public Meeting and makes a recommendation for approval or denial to the City Council.
7. City Council holds a Public Hearing for approval or denial of the District Designation and Design Guidelines.
8. If approved, the City Council adopts by ordinance.

Final:

9. A copy of each designating ordinance is sent to HPC, the Planning and Zoning Commission and to the Planning Division as well as to the owner(s) of the property(ies). A copy of the design guidelines is recorded with the County Recorder of Deeds by Planning.

# Certificate of Appropriateness

If exterior changes need to be made on a Local Historic Landmark or on property within a Local Historic District, a Certificate of Appropriateness must be obtained from the Historic Preservation Commission (HPC). The Applicant meets with the Planning Division to discuss the request.

Submittal:

1. The Applicant submits one completed application to the Planning Division.

Review:

2. The application is reviewed by the Planning Division and the HPC.

Approval of Application:

3. The HPC decides to approve or deny the request as presented or with modifications.
4. If the HPC denies the request, an appeal can be made to the City Council. The application is then forwarded to the City Council. The Council votes to approve or deny the request for a Certificate of Appropriateness as presented or with modifications.

Final:

5. If approved, the Certificate of Appropriateness is issued by the Planning Division. One copy is provided to the Inspections Services Division.

# Central Business District- Building Modification

Submittal:

1. Applies to work affecting the exterior appearance of a building or structure in the CBD, but for which a permit is not required. Excludes ordinary maintenance and repair.
2. The applicant submits a completed CBD Design Standards Approval Application and required documents to the Inspection Services Division.

Review:

3. The application is reviewed by the Inspection Services Division and the Planning Services Division. If there are any issues with the application, the Inspection Services Division will notify the applicant, who may amend the application and/or submit revised documents.

Approval:

4. The Inspection Services Division approves or denies the request. If denied, the reason(s) for denial is stated on the application or in a separate letter to the applicant.

Final:

5. Upon approval or denial of the request, a copy of the application with the reviewer's signature is given to the applicant.

# Voluntary Annexation Procedures

Submittal:

1. The owner(s) of record of the property shall submit a copy of the property deed(s) and application form to the Planning Services office. A petition for annexation and an annexation agreement will be prepared by Planning Services and delivered to the Owner(s) to be signed, notarized and returned to Planning Services.

Review:

2. The Development Review Group will review the request for annexation. If the DRG agrees that the property should be annexed (if contiguous) or allowed to use City services and annexed in the future (non-contiguous to existing city limits), Planning Services will begin processing the annexation.

Approval:

3. If the property is not contiguous, the annexation petition and agreement are recorded in the County Recorders office. The property owner can use City utilities once the petition and agreement are fully signed.
4. If the property is contiguous, a resolution is prepared for the City Council which accepts the petition and sets a public hearing date for the annexation. Additionally, the property owner will need to submit a rezoning application which will be processed concurrently with the annexation. See the Planning Services office for more detailed timeframes regarding these actions.

Final:

5. Once the annexation is finalized, the Planning Services office notifies interested parties of the annexation.
6. The GIS Coordinator updates the city limits information to include the annexed area.
7. The Planning Services office revises the ward boundaries to include the annexed area.

# APPENDIX A

Street Addressing Procedures
Zoning Variance Request Procedures
Development Code Variance Request Procedures
Building Code Appeal Procedures
Subsurface Drainage within Rights-Of-Way

# Street Addressing Procedures

1. The principal purpose in assigning proper street numbers to structures, and posting them prominently on the structures, is to enhance, if not ensure, rapid response from emergency service providers; primarily ambulance, fire and police services. Every building fronting on any street, or upon any lot or fractional lot, shall be numbered.

For proper distribution of numbers, one (1) number shall be allotted to every twenty (20) feet of frontage.

Numbers on residential buildings shall be at least four (4) inches high or reflective white numbers at least three (3) inches high on a reflective green or blue background, showing the correct number of the building, and shall be placed in a location visible from the street. Numbers on commercial buildings shall be at least six (6) inches high and shall be placed in a location visible from the street, and a second set shall be placed in a location visible from the rear of the building. The numbers shall be Arabic, and shall be in a color contrasting to the background upon which they are placed.

Buildings on streets running north and south begin at Independence Street as the dividing line from Water Street to Farrar Drive; Percy Street from Mt. Auburn Road to Interstate 55; and William Street from Interstate 55 west. Even numbers are located on the east side and odd numbers are located on the west side.

Buildings on streets running east and west begin at the levee, or Water Street, and go west. Even numbers are located on the north side and odd numbers are located on the south side.

2. After the subdivision plat is approved, the digital version (.dxf) of the plat in the state plane coordinate system and two paper copies are given to the GIS coordinator. The GIS Coordinator uses the digital version to assign address numbers and then saves the plat along with the addresses to the GIS network under the Addressing Folder. The original paper copy is given to the Permit Technician along with the address numbers to be stored in the plat file. The second paper copy is stored in the addressing filing cabinet. The Permit Technician assigns a plat number to the addressed plat which then gets added to the subdivision master list. Every three months these plats are scanned and added to the Subdivision Plat folder under the GIS network.

3. Address numbers are issued by GIS Division. For new residential subdivisions, address numbers are generally assigned to each lot at the time the record plat is received. The address numbers are placed on the copy of the record plat provided to Inspection Services. The address numbers are also provided to all utilities and emergency service offices.

4. For commercial and multi-family developments, the GIS Division may assign an address or addresses in conjunction with the site plan review process. This site plan should be to scale, and should show the location of the structure on the lot.

5. If plans are submitted to the Inspection Services Office for which no address has been assigned for one and two family residential development, a copy of the site plan is provided to the GIS Division so the correct address can be calculated and assigned for the structure.

# Zoning Variance Request Procedures

Submittal:

1. Applicant submits two copies of the completed request form are to be returned to the Planning Services.

Review:

2. The request is reviewed by the City Planner, DRG, and the City Attorney. If required changes are necessary, a letter will be sent to the Applicant.

Re-submittal:

3. Applicant submits 1 Final Request. A letter shall accompany the plans and state the corrections made.

Approval:

4. The City will hold a public hearing to consider the Variance. Notice of Public Hearing must be advertised in a local newspaper 7 days prior to the Public Hearing. At least ten (10) days notice of the time and place of such hearing (this will take place at the Board's meeting) will be published in a local newspaper. The Applicant or Applicant's Agent shall appear at the Public Hearing to present the request and to answer any questions that may arise.
5. The Board of Adjustment will then vote to approve or disapprove the request. The Board also adopts Findings and Conclusions of Law.

Final:

6. If the Board approves the request, the process is complete. The owner or his agent may then obtain any permits required by the Inspection Services office to complete their project.
7. If the Board denies the request, the owner may appeal its decision to the Circuit Court of the county within thirty (30) days of the filing of the decision in the office of the Board, if they desire. If the applicant does not wish to appeal the decision, the request stands as denied. Any construction must then meet the requirements of the Zoning or Development Code Ordinance.

**Planning Division**
**(Planning and Zoning Commission)**

# Development Code Variance Request Procedures

Submittal:

1. Applicant submits two copies of the completed requests forms are to be returned to the Planning Division.

Review:

2. The application is reviewed by the City Planner, the City Attorney, and the Development Review Group. If required changes are necessary, a letter will be sent to the Applicant.

Re-submittal:

3. The Applicant submits one Final corrected application. A letter shall accompany the application and state the corrections made.

Approval:

4. The City will hold a Public Hearing to consider the Variance Request. Notice of the Public Hearing must be advertised in a local paper seven days prior to the Public hearing. The Applicant or Applicant's Agent shall appear at the Public Hearing to present the request and to answer any questions.
5. The Planning and Zoning Commission will then vote to approve or disapprove the request. The Commission also adopts Findings and Conclusions of Law.

Final:

6. If the Commission approves the request, the process is complete. The applicant or applicant's agent can then obtain the City permits allowed by the variance.
7. If the Commission denies the request, the applicant may appeal the decision to the Circuit Court of the County within thirty days of the filing of the decision in the office of the Board. If the applicant does not wish to appeal the decision, the request stands as denied. Any construction must then meet the requirements of the Development Code.

**Inspections Division**
**(Board of Appeals)**

# Building Code Appeal Request Procedures

Submittal:

1. Applicant submits two copies of the completed request form and supporting documentation to Inspections Services.

Review:

2. The request is reviewed by the Inspection Services Director to verify that it meets criteria set out in Section 112.1 of the Building Code. If required changes are necessary, a letter will be sent to the Applicant.

Re-submittal:

3. Applicant submits 1 Final Request. A letter shall accompany the plans and state the corrections made.

Approval:

4. The City will hold a public hearing at the Board of Appeals meeting to consider the Appeal. Notice of Public Hearing must be advertised in a local newspaper 7 days prior to the Public Hearing. At least ten (10) days notice of the time and place of such hearing (this will take place at the Board's meeting) will be published in a local newspaper. The Applicant or Applicant's Agent shall appear at the Public Hearing to present the request and to answer any questions that may arise.
5. The Board of Adjustment will then vote to approve or disapprove the request.

Final:

6. If the Board approves the request, the process is complete. The owner or his agent may then obtain any permits required by the Inspection Services office to complete their project.
7. If the Board denies the request, the owner may appeal its decision to the Circuit Court of the county within thirty (30) days of the filing of the decision in the office of the Board, if they desire. If the applicant does not wish to appeal the decision, the request stands as denied. Any construction must then meet the requirements of the Zoning or Development Code Ordinance.

# Subsurface Drainage within Rights-Of-Way

In reference to the installation of culverts in front of your property, the following is required according to City Ordinances and City Engineering policies:

1. Obtain Permit from Inspection Services. The property owner must submit plans of the drainage system for review and approval. The plans shall show the following:

    a. Existing structures, roads, driveways, culverts (Including type, size, and direction of flow), utilities (include type and size, if known) that are within the proposed construction area.
    b. Proposed pipe and structures (include type, size and direction of flow).

2. The pipes required shall be new 15" (minimum) reinforced concrete pipe of Bell and Spigot type with "O" ring rubber gaskets. The City Engineer's Office will verify, with the owner, the pipe size to be used. The equivalent elliptical pipe sizes are required when adequate ground cover can not be achieved with round pipe. The owner must verify the pipe size with the Engineering Division.

3. The bells of the pipes shall be laid upstream.

4. All pipes shall require a 3" compacted limestone base.

5. Inspection by the Engineering Division is required before backfilling the pipes. One (1) working days notice is required for scheduling of inspections. The inspection will be performed as scheduled. The requests are to be scheduled with the Division secretary at (573) 339-6327. Engineering will contact Inspection Services with acceptance or denial of the work.

6. It is the property owner's responsibility to install all culverts in accordance with the City of Cape Girardeau's codes, manufacturer's recommendations and standard engineering practices.

7. The property owner shall call 1-800-DIG-RITE (1-800-344-7483) to ascertain utility locations.

8. Failure to comply with the above requirements will result in the removal and re-installation of culverts or correction of any defects at the owner's expense.

# APPENDIX B

Comprehensive Permit List
Permit Description
Permit Fees
Plan Review Fees

## COMPREHENSIVE PERMIT LIST

Building Permits- Inspection Services
Electrical Permits- Inspection Services
Plumbing Permits- Inspection Services
Mechanical Permits- Inspection Services
Demolition Permits- Inspection Services
Occupancy Permit- Inspection Services
Excavation Permits- Inspection Services
Alteration to Public Street Permit/Driveways- Inspection Services
Mobile Home – Inspection Services
Pre-manufactured Carport– Inspection Services
Sign– Inspection Services
Billboard– Inspection Services
Sidewalk– Inspection Services
Residential Driveway– Inspection Services
Commercial Driveway– Inspection Services
Driveway with a Culvert– Inspection Services
Fence– Inspection Services
Retaining Wall– Inspection Services
Water Tap– Inspection Services
Sewer Tap– Inspection Services
Stormwater Management Permit- Engineering
Floodplain Development Permit- Engineering
Special Use Permits- Planning
Certificate of Appropriateness- Planning

## PERMIT DESCRIPTION

**Building Permits- Inspection Services**

Must be obtained to construct, enlarge, or alter a structure. The installation of a pre-manufactured carport is included.

**Electrical Permits- Inspection Services**

Must be obtained to install new electrical service, wiring, or appliance, or to alter or add to an existing installation, EXCEPT minor repair work, such as replacing flush and snap switches, replacing fuses, lamp sockets, and receptacles.

**Plumbing Permits- Inspection Services**

Must be obtained new plumbing or drain laying work, whenever alterations are made in the waste and/or vent line in new and existing piping or fixtures. A plumbing permit is NOT REQUIRED for repairs which involve only the working parts of a faucet or valve, clearance of stoppages, or repairing or replacement of defective faucets or valves.

**Mechanical Permits- Inspection Services**

Must be obtained for installation of devices or appliances such as furnaces, air conditioners, gas piping, venting of gas appliances, etc.

**Demolition Permits- Inspection Services**

Must be obtained to demolish any structure. This permit can only be issued AFTER all utilities have been disconnected by Ameren UE (for gas and electric) and Alliance Water Resources (for water). The owner and/or contractor is responsible for disconnecting the sewer at the property line. The City inspects the sewer disconnect prior to it being covered. Utility disconnection forms may be obtained from the Inspection Services Office at City Hall. No demolition work can begin until the permit has been acquired. The demolition must be completed, the lot cleaned off and graded within 45 days of issuance of the permit.

**Occupancy Permit- Inspection Services**

Is required on any structure that requires a building permit prior to the structure being occupied, whether it residential, commercial, or industrial. The final occupancy inspection is especially important to ensure the safety of your structure.

**Excavation Permits- Inspection Services**

A ROW Permit is required for any work on City right-of-way for sewer, water, or gas connections, or for installing utility cables in right-of-way. This includes any street cut made, or excavation behind the pavement on City right-of-way. Where applicable, the permit number of the Excavating Permit is to be written into the concrete placed in the patch, along with the date the patch was made.

**Alteration to Public Street Permit/Driveways- Inspection Services Division**

An Alteration to Public Street Permit is required to construct, reconstruct, repair, alter, or grade any sidewalk, curb, gutter, curb-cut, or driveway on City right-of-way. The portion of the driveway on City right-of-way MUST be meet City Ordinances and Standards. Any variances are to be approved by the City Manager

**Driveway with a Culvert- Inspection Services Division**

Must be obtained to construct, enlarge, or alter any culvert within the Right-of-Way. For more information follow attached form, Subsurface Drainage within Rights-Of-Way.

**Mobile Home - Inspection Services Division**

Must be obtained to construct, enlarge, or alter a structure

**Sign- Inspection Services Division**

Must be obtained to construct, enlarge, or alter any device visible from a public place that displays either commercial or noncommercial messages by means of graphic presentation of alphabetic or pictorial symbols or representations.

**Billboard- Inspection Services Division**

Special Use Permit is required. Must be obtained to construct, enlarge, or alter any billboard.

**Sidewalk- Inspection Services Division**

Must be obtained to construct, enlarge, or alter any sidewalk

**Fence- Inspection Services Division**

Must be obtained to construct, extend, or replace any fence over 30” in height.

**Retaining Wall- Inspection Services Division**

Must be obtained to construct, extend, or replace any retaining wall over 4’ in height.

**Water and Sewer Tap- Inspection Services Division**

Must be obtained to tap City services. New construction will be charged a sewer tap fee, which is based on water tap size.

**Stormwater Management Permit- Engineering Division**

Must be obtained if grading/filling property or developing property. Shall be issued prior to issuance of a Building Permit to assure that stormwater runoff is adequately controlled. This provision applies to all development except for single-family and two-family construction on lots of record. In some cases, stormwater management plans may be incorporated into the development of a subdivision, while in others stormwater management provisions will be included for individual lots.

**Floodplain Development Permit- Engineering Division**

Must be obtained for all construction, development, or substantial improvement located within a special flood hazard area. Special flood hazard areas or delineated on maps provided by the Federal Emergency Management Agency.

An Elevation Certificate is required upon the completion of any structure, including manufactured homes, certifying that the lowest floor, including basement, is elevated to or above the base flood elevation.

Non-residential structures may be flood proofed so that any finished floor located below the base flood elevation providing that the structure is watertight with walls substantially impermeable to the passage of water, in which case a Flood proofing Certificate is required in addition to an Elevation Certificate upon completion and prior to occupancy.

# FEE SCHEDULE

*effective July 1, 2015*

## APPLICATION FEES

**CBD DESIGN STANDARDS APPROVAL - Planning Services Division**

*No fee*

**CERTIFICATE OF APPROPRIATENESS - Planning Services Division**

*No fee*

**LOCAL HISTORIC DISTRICT DESIGNATION - Planning Services Division**

$126.00 application fee

**LOCAL HISTORIC LANDMARK DESIGNATION - Planning Services Division**

$126.00 application fee

**REZONING / SPECIAL USE PERMIT - Planning Services Division**

$126.00 application fee

**VARIANCE** *(DEVELOPMENT / ZONING CODE)* **- Planning Services Division**

$50.00 per request

## INSPECTION FEES

**INFRASTRUCTURE IMPROVEMENTS / RELOCATIONS / MODIFICATIONS** *(STREETS, WATER, SANITARY SEWER, AND PUBLIC STORM WATER)* **- Engineering Division**

*Actual inspection costs*

## LICENSE FEES

**RESIDENTIAL RENTAL LICENSE - Inspection Services Division**

| | | |
|---|---|---|
| One (1) - five (5) units | = | $ 50.00 (*renewable annually*) |
| Six (6) or more units | = | $100.00 (*renewable annually*) |

**License Renewal Late Fees**

$ 0.50 per day beginning on day 31 and every calendar day thereafter past renewal date

**TRADE LICENSES - Inspection Services Division**

| | | |
|---|---|---|
| Building trade licenses | = | $ 35.00 (*renewable annually*) |

**License Renewal Late Fees**

| | | |
|---|---|---|
| 1 to 30 days past renewal date | = | $ 10.00 |
| 31 to 60 days past renewal date | = | $ 20.00 |
| 61 to 90 days past renewal date | = | $ 30.00 |

# PERMIT FEES

## BUILDING PERMITS - Inspection Services Division

### Demolition

$20.00 *(flat fee)*

### New Construction and Additions

| | | |
|---|---|---|
| 0 - 2,500 sq ft | = | $ 0.10 per sq ft **($40.00 minimum)** |
| 2,501 - 10,000 sq ft | = | $125.00 + $0.10 per sq ft for area over 2,500 sq ft |
| Over 10,000 sq ft | = | $462.50 + $0.10 per sq ft for area over 10,000 sq ft |

### Re-Inspection Fees

$15.00 per inspection after the first two (2) inspections

### Remodeling

| | | |
|---|---|---|
| $0 - $3,000 | = | $ 40.00 |
| $3,001 - $10,000 | = | $ 40.00 + $3.00 each additional $1,000 (next $7,000) |
| $10,001 - $50,000 | = | $ 61.00 + $2.00 each additional $1,000 (next $40,000) |
| $50,001 - $100,000 | = | $144.00 + $1.00 each additional $1,000 (next $50,000) |
| Over $100,000 | = | $191.00 + $0.50 each additional $1,000 (over $100,000) |

### Signs and Billboards

| | | |
|---|---|---|
| Sign | = | $ 20.00 |
| Billboard | = | $ 50.00 |

### Miscellaneous

| | | |
|---|---|---|
| Commercial driveway | = | $ 75.00 |
| Residential driveway | = | $ 50.00 |
| Driveway with culvert | = | $100.00 |
| Fence | = | *No fee* |
| Mobile home re-inspection | = | $ 15.00 |
| Pre-manufactured carport | = | $ 40.00 |
| Retaining wall | = | *No fee* |
| Sidewalk | = | $ 50.00 |

## ELECTRICAL PERMITS - Inspection Services Division

$ 3.00 per circuit
$25.00 per service
**$15.00 minimum** permit charge

## EXCAVATION - Inspection Services Division

Excavation with no pavement cut: $50.00
Excavation with pavement cut: $100.00

## FLOODPLAIN DEVELOPMENT - Engineering Division

Development in the floodplain: $25.00
Development in the floodway: $50.00

## MECHANICAL PERMITS - Inspection Services Division

$ 0.20 per 1,000 BTU input of appliances
$ 2.00 per 10 feet of pipe or portion thereof
$20.00 to move meter
**$15.00 minimum** permit charge

## PLUMBING PERMITS - Inspection Services Division

$15.00 permit charge + $2.00 per fixture
$15.00 cut wye into sewer main
$15.00 septic tank installation

## SANITARY SEWER PERMITS - Inspection Services Division

### Private Sewage Disposal System

Single family: $15.00
Multifamily, commercial, and industrial: $50.00

### Sewer Connection for Parcel Outside the Boundaries of a Sewer District

$250.00 per building served

### Sewer Main Connection

$500.00 *(flat fee)*

### Sewer Service if Producing Industrial Wastes

Residential or commercial building sewer permit: $15.00
Industrial building sewer permit: $35.00

### Sewer Tap Fees

| | | |
|---|---|---|
| ¾" water tap | = | $ 750.00 |
| 1" | = | $1,460.00 |
| 1 ½" | = | $2,640.00 |
| 2" | = | $3,820.00 |
| 3" | = | $9,010.00 |
| 4" & larger | = | $ 0.373 per est. gallon/day of volume for new connector |

## STORMWATER MANAGEMENT *(INCLUDING FILL / GRADING)* - Engineering Division

Less than 25 acres: $35.00
25-200 acres: $70.00
Over 200 acres: $140.00

### WATER PERMITS - Inspection Services Division

#### Water Main Connection

$500.00 *(flat fee)*

#### Water Service Installation Fees

| | | |
|---|---|---|
| ¾" service line | = | $ 635.29 |
| 1" | = | $ 942.96 |
| 1 ½" | = | $1,860.46 |
| 2" | = | $2,467.76 |
| OVER 2" | = | $2,467.76 DEPOSIT – *adjustments to reflect actual cost will be made after completion of work* |

## PLAN REVIEW FEES

### COMMERCIAL BUILDING - Inspection Services Division

New construction & additions: $40.00 + $ 0.035 per sq ft
Remodels: $20.00 + 0.2% of the cost of construction

### SUBDIVISION PLAT - Planning Services Division

One- and two-family residential: $18.00 per lot **($90.00 minimum) +** recording fee
Multifamily residential: $18.00 per dwelling unit **($90.00 minimum) +** recording fee
Commercial/industrial: $18.00 per acre **($90.00 minimum) +** recording fee

#### Recording Fee

| | | |
|---|---|---|
| 18" x 24" | = | $44.00 |
| 24" x 36" | = | $69.00 |

# APPENDIX C

List of Approved Manuals and Resources
Building Codes
Specifications and Standard Design Drawings
Other Helpful Resources
Computer-Aided Design Standards
Check Lists - ***The checklists presented here are not an exhaustive compilation of code requirements. The design professional is responsible for compliance with locally adopted Codes and Ordinances.***

**APPROVED MANUALS:**

Coming Soon…

**BUILDING CODES:**

**International Building Code (IBC) - 2009 Series**
**National Electric Code (NEC)**

**SPECIFICATIONS AND STANDARD DRAWINGS:**

**City of Cape Girardeau Standard Specifications**

**OTHER HELPFUL RESOURCES:**

**MoDOT Engineering Policy Guide (http://epg.modot.org)**
**MoDOT Standards and Specifications**
**Division 20 Chapter 8 Design Guides (MoDNR) (Sanitary Sewer)**
**Design Guide for Community Water Systems (MoDNR)**
**Manual on Uniform Traffic Control Devices (Current Edition)**
**AASHTO Green Book**

## CAD STANDARDS

Coming Soon…

**CITY *of* CAPE GIRARDEAU**

DEVELOPMENT SERVICES

## TRACKING AND APPROVAL

**Procedure Requested**

_____ Subdivision Plat
_____ Rezoning/Special Use Permit
_____ Site Plan
_____ Infrastructure Improvements
_____ Work Guarantee
_____ Easement
_____ Stormwater Management
_____ Floodplain Development

_____ Commercial/Multifamily Building/Remodel
_____ Residential Building/Remodel
_____ License and Indemnity
_____ Vacation of Right-of-Way or Easement
_____ Adjustment of Property Lines
_____ Local Historic Landmark Designation
_____ Local Historic District
_____ Certificate of Appropriateness
_____ Voluntary Annexation

Name of Developer: _____ Contact Info: _____
Name of Consultant: _____ Contact Info: _____
Name of Property Owner: _____ Contact Info: _____

Staff Responsible: _____ Contact Info: _____
Date Submitted: _____

DRG Comments:

_____
_____
_____
_____
_____

Date Re-Submitted: _____

Notes:

_____
_____
_____

**Approval (if applicable):**

| Staff | Date | Name | Signature | Comments |
|---|---|---|---|---|
| Planning | | | | |
| Engineering | | | | |
| Inspections | | | | |
| PW | | | | |
| Alliance | | | | |
| Fire | | | | |
| Attorney | | | | |

**Preliminary Plat**
**Check List**

## Engineering Division

Subdivision Title: Sewer District #:
Staff Reviewer: Date:

General Requirements:

_____ Subdivision name (is it a duplicate?)
_____ Prepared by
_____ Prepared for
_____ Designer and surveyor
_____ Area of tract
_____ Contour data, north arrow, and scale
_____ Location of existing and proposed improvements and property lines
_____ Zoning, floodplain certification or delineation
_____ Area of lot (minimum – maximum)
_____ Alteration to areas in floodplain
_____ Sewage disposal system (trunk, lateral, other)
_____ Certification of party who prepared plat
_____ Location of water supply
_____ Location proposed street lights

Residential Subdivision Requirements:

_____ Street frontage
_____ Avoid double lots
_____ Area of lot not including street right of way
_____ Lot areas meet zoning
_____ Minimum frontage on cul-de-sacs 36 ft.
_____ Lot lines perpendicular and radial to street
_____ Corner lots have adequate width on both sides

Non-Residential Subdivision Requirements:

_____ Required minimum road width and right of way
_____ Alleys as required for service access

Street Requirements:

_____ Arrangements conform to street master plan
_____ Street name (are there any duplicates?)
_____ Tangents between reverse curves on major streets 100 ft.
_____ Minimum angle of intersection 90 deg.
_____ Minimum horizontal curve
_____ Maximum length of cul-de-sac

Additional Comments:

**Record Plat**
**Check List**

**Engineering Division**

Subdivision Title: Sewer District #:

Staff Reviewer: Date:

General Requirements:

_____ Subdivision name (is it a duplicate?)
_____ North arrow, scale, owners
_____ Boundary lines with bearings and distances
_____ Government survey lines
_____ Street and alley right of way width and name
_____ Delineation of property dedicated to public use
_____ Departure between streets
_____ Boundary lines of adjoining property and street right of way
_____ Lot lines and identification system
_____ Building line and easement dimensions and use
_____ Dimensions and bearings to locate boundary, lots, easements
_____ Survey monuments
_____ Zoning and floodplain certification or delineation
_____ Area of lot (minimum – maximum)
_____ Name and description of subdivision
_____ Certification of surveyor
_____ Private restrictions
_____ City clerk's and recorder's statements
_____ Language dedicating all streets to public use forever
_____ Number of lots ___ and/or ___ acreage
_____ Subdivision review fee

Residential Subdivision Requirements:

_____ City street frontage
_____ Avoid double lots
_____ Area of lot not including street right of way
_____ Lot areas meet zoning
_____ Minimum frontage on cul-de-sacs
_____ Lot lines perpendicular and radial to street
_____ Corner lots have adequate width on both sides
_____ Existing structures shown

Non-Residential Subdivision Requirements:

_____ Required minimum road width and right of way
_____ Alleys as required for service access

Street Requirements:

_____ Arrangements conform to street master plan
_____ Street name (are there any duplicates?)
_____ Tangents between reverse curves on major streets 100 ft.
_____ Minimum angle of intersection 90 deg.
_____ Minimum horizontal curve
_____ Maximum length of cul-de-sac

Additional Comments:

**Sanitary Sewer Plan**
**Check List**

**Engineering Division**

Subdivision Title: Sewer District #:

Staff Reviewer: Date:

General Requirements:

_____ Drawing title that includes: municipality, sewer district, engineer, and seal.
_____ Scale & North arrow included.
_____ Drawing size: 22”X 34”.
_____ Identified Benchmark(s)
_____ Existing and proposed streets shown and identified.
_____ All streams or water surfaces including direction of flow shown clearly and identified if possible.
_____ Contour lines at “suitable” intervals that are shown properly.
_____ The size, location, and direction of flow of all existing and proposed sanitary sewers are shown and identified.

Detailed Plan Requirements:

_____ A horizontal scale not more than 100 feet to an inch.
_____ Shown line of ground surface.
_____ Both pipe size and type shown and identified.
_____ Length and grade of sewer line between each manhole shown and identified.
_____ Invert and surface elevation at each manhole shown and identified.
_____ Numbered manholes on both the plan and profile views.
_____ Locations of all special features i.e. inverted siphons, elevated sewers, concrete encasements, & etc, shown and identified.
_____ Lateral and wye locations shown, identified, and detailed.
_____ Minimum grade of pipe meets DNR requirements for pipe size
_____ Maximum length between manholes 400 feet
_____ Locations of existing structures and utilities shown and identified.
- ___ Water mains
- ___ Gas mains
- ___ Storm drains
- ___ Electric lines
- ___ Telephone lines

_____ Special details shown if applicable.
_____ Stream crossings shown if applicable.
_____ Sewer outlets shown if applicable.
_____ Special sewer joints and cross sections are shown and described if applicable.
____ Manholes, lampholes, inspection chambers, inverted siphons, regulators, tide gates, and elevated sewers shown and described if applicable.
_____ DNR Application and fees
- ___ Sewer extension under 1,000 feet. ($75)
- ___ Sewer extension over 1,000 feet. ($300)
- ___ Construction of a lift station. ($300)

**Water Improvement Plan**
**Check List**

**Engineering Division**

Subdivision Title: Sewer District #:

Staff Reviewer: Date:

General Information:

_____ Required number of plans submitted (8 copies)
_____ Sheet size 22" X 34"
_____ Border
_____ Title block
- _____ Name of project/subdivision
- _____ Name and address of owner/developer
- _____ Name and address of engineering firm
- _____ Licensed engineer seal and signature
- _____ Revision block
- _____ Sheet number

_____ North arrow and scale not less than 1"=100' horizontal and 1"=10' vertical
_____ Text sizes and location easily readable
_____ Location map (showing nearest cross street)
_____ Symbol key
_____ Notes
_____ Benchmark data in State Plane coordinates
_____ Stationing and dimensions shown
_____ Street name(s) shown
_____ Lot lines w/addresses or lot numbers
_____ ROW and proposed/existing easement lines
_____ Are DNR and City standards/specifications used/indicated?
_____ Section _____ Township _____ Range _____ or USPS _____

General Requirements:

_____ Water main extension request completed and submitted
_____ Is proposed location inside existing City limits?
If no, _____ Has an annexation petition been completed and submitted?
_____ Location and size of existing watermain to be tied to
_____ Has this been verified by City staff?
_____ Pressure and flow calculations submitted
- _____ Cybernet
- _____ Hydrant flow
- _____ Other method/software

_____ Were demand calculations submitted?
_____ Has the impact on the existing system been analyzed?
_____ Does project require a site visit?
_____ Will easement(s) be needed
If yes, _____ plat dedication
_____ Separate document
_____ DNR application completed

Design:

_____ Does project fit with Master Plan?
_____ Have minimum pressure requirements been met?
- _____ Residential normal demand (40 psi min.)
- _____ Fire flow demand (20 psi residual min.)

_____ Have any pressure zone boundaries been crossed?
_____ Minimum diameter met? (6" or greater as necessary)
- _____ Is larger pipe required to adequately serve development?
- _____ Is City requiring a larger size?

_____ Valve placement and spacing acceptable?
_____ Hydrant placement and spacing acceptable?
_____ Minimum pipe cover of 42 inches met? (or requirement noted if no profile)
_____ Minimum separations met from sanitary sewers
- _____ 10 feet horizontal minimum from outside of pipe to outside of pipe
- _____ 18 inches vertical minimum from bottom of pipe to top of pipe
- _____ 10 feet from manhole minimum
- _____ 18 inches vertical at pipe crossings

_____ Acceptable pipe material
- _____ 6"-12" PVC AWWA C900-89 DR 18 Pressure Class 150
- _____ 14"-24" PVC AWWA C905-88 DR 18 Pressure Class 235
- _____ Ductile Iron AWWA C151 Class 52
- _____ 6"-12" HDPE AWWA

____ Thrust blocks shown
_____ Existing utilities shown
- _____ Water
- _____ Sanitary sewer
- _____ Storm sewer
- _____ Gas
- _____ Electric

_____ Are standard symbols used?
_____ Are high point and low point identified on plan?
_____ Have high and low point pressures been calculated?
_____ Has a "constructability" review been done?

**Subdivision Improvement Plan**
**Check List**

**Engineering Division**

Subdivision Title: Sewer District #:

Staff Reviewer: Date:

General Requirements:

_____ Preliminary plat approved
_____ Drawing size of 22" X 34"
_____ Title page and site map showing location of tract
_____ North arrow and scale included
_____ Name and address of Developer and Engineering firm with Engineer's seal included
_____ Benchmarks with elevations based on sea level datum
_____ Compliance with City Standards and Specifications
_____ Paving details, conforming to City Specifications
_____ Details of existing and proposed streets with cross sections
_____ Drawing scales: Not less than 1"=100' horizontal; and 1"=10' vertical
_____ Text sizes and location easily readable
_____ Base flood elevation data
_____ Plan and Profile views of streets and sewers
_____ Existing and proposed survey monuments
_____ Location of existing water mains
_____ Necessary easements shown for drainage, utilities, and etc

Multiple Dwelling Unit:

_____ Number of dwelling units not to exceed the maximum of zoning district
_____ Access for pedestrians and vehicles not directly on street
_____ Roadways to service parking and vehicles not considered streets
_____ Parking bays in r-4 zoning district ( as recommended )

Non-Residential Subdivision:

_____ Road footage of 50 feet required where off-street parking or loading is required
_____ Walk-ways, fencing as necessary to ensure public safety
_____ Minimum curb radius at intersections of 32 feet
_____ Minimum pavement width of 40 feet
_____ Minimum right of way width of 60 feet
_____ Dead-end street, minimum 84 feet diameter turnaround
_____ Shown alleys ( as required )
_____ Permanent survey monuments on two corners of intersection

Sanitary Sewers:

_____ Sewer district number _____
_____ Plan view of proposed and existing sewers
_____ Profile view of proposed and existing sewers
_____ Horizontal scale not more than 1"=100'
_____ Line of ground surface shown
_____ Pipe size and type shown
_____ Minimum grade of .4%
_____ Length between manholes, 400 feet
_____ Invert and surface elevation at each manhole
_____ Manholes numbered and plan and profile views
_____ Lateral and wye locations indicated
_____ Locations of all special features, i.e. inverted siphons, elevated sewers, concrete encasement, etc.

_____ Locations of existing structures and utilities shown and identified.
- ___ Water mains ___ Electric lines
- ___ Gas mains ___ Telephone lines
- ___ Storm drains

_____ Special details shown as needed
_____ Stream crossings shown if applicable
_____ Sewer outlets shown if applicable
_____ Special sewer joints and cross sections are shown and described if applicable
_____ DNR Application and fees
- ___ Sewer extension under 1,000 feet. ($75)
- ___ Sewer extension over 1,000 feet. ($300)
- ___ Construction of a lift station. ($300)

Storm Sewers:

_____ Stormwater management plan submitted and approved
_____ EPA Stormwater permit
_____ Plan and profile views of proposed improvements
_____ Existing stormwater inlets, pipes, etc. shown
_____ Elevations, grades, and lengths clearly labeled
_____ Future improvements considered
_____ Inlet placement suitable
_____ Detail showing flow directions at intersections
_____ Detention basin(s) labeled
_____ Detail of detention basin(s)
- ___ Inlet / outlet basin(s)
- ___ Slope
- ___ Overflow weir

___ Proposed system sufficient to drain subdivision
- ___ sufficient inlets
- ___ pipe size and slope
- ___ discharge protected

Street Standards:

_____ Major street plan followed
_____ Provisions for future extensions
_____ Local street discontinuities are more than 100 feet
_____ 100 feet tangent between reverse curves on arterial and collector streets
_____ Intersection angle between $70^o$ and $90^o$
_____ Minimum radius of 20 feet at right of way intersections
_____ Minimum radius of 32 feet at back of curb
_____ Street crossing major street, on centerline or 300 feet offset
_____ Meet standard street specifications including Table A
_____ Stub streets longer than 250 feet have turnaround
_____ Necessary right of way platted next to existing street
_____ No ½ streets allowed
_____ Sufficient right of way at railroad crossing
_____ Minimum lot depth of 160 feet along railroad right of way
_____ Street names shown and labeled clearly
_____ Minimum grade of 1%
_____ Maximum grade not exceeded, See Table A for specific numbers
_____ Minimum curve radius met, See Table A for specific numbers
_____ Vertical curve data shown and sufficient
_____ Sight distance okay
_____ Turnarounds: 52’ radius to right of way
42’ radius to outer pavement curb
_____ Plan and profile views of each proposed street
_____ Intersection details showing elevations, radii, etc.
_____ Cross sections shown for streets

***The checklist presented here is not an exhaustive compilation of code requirements. The design professional is responsible for compliance with locally adopted Codes and Ordinances.***

**Site Plan Review Checklist**

Project Name: _____

Date: _____

Permit #: _____

Reviewed by: _____

Signed/sealed by design professional? ____

Acreage of Development: _____

Building Use: _____

- — Zoning designation
- — Permitted use

| Complies with: | Allowed | Provided |
|---|---|---|
| Max. Height | _____ | _____ |
| Min. lot area | _____ | _____ |
| Min. lot width | _____ | _____ |
| Max. density | _____ | _____ |
| Max. Bldg Coverage | _____ | _____ |

- — Yard requirements:

| | | |
|---|---|---|
| Front yard | _____ | _____ |
| Rear yard | _____ | _____ |
| Side yard | _____ | _____ |

Overlay district?
- — NCON
- — H
- — CX
- — IO
- — DCC

Off-Street Parking
- — 25-201 Not required in CBD
- — 25-202 Parking/drive aisle dimensions
- — ≥ 20% compact parking allowed
- — Signage for compact parking
- — 25-203 Required # of spaces per use

| | Req'd | Provided |
|---|---|---|
| Parking spaces | _____ | _____ |
| Stacking spaces | _____ | _____ |

- — 25-210 Up to 10% of parking may be replaced with bicycle or motorcycle spaces, 2:1 ratio
  - — ≥ 10 parking spaces to qualify
  - — 25-210 bicycle/motorcycle parking dimensions

Off-Street Loading
- — 25-211 # required

Req'd _____ Provided _____
- — 25-211 Dimensions

Exterior lighting 25-303
- — Without cutoff, 15' max
- — With total cutoff, 60' max
- — Shields on building & ground lighting
- — Not w/in bufferyard
- — Site lighting plan
- — Photometric plan
- — Lighting cut sheets
- — If >30% of lighting moved/replaced, lighting to comply with 25-303

Subdivision Requirements 25-1400
- — Min. lot sizes
- — Easements 25-1408
  - — 10' along public street
  - — 5' along rear of lot
  - — 5' along side lot lines (if req'd by City Engineer)

Sidewalks 25-1413
- — In all new residential subdivisions

Signs 25-506

Complies with:
- — Max height
- — Max area
- — Max # of signs
- — Location

Fences 25-600
- Not on property line
- Not w/in 30’ of intersection
- Not w/in utility easement
- 25-604 Max height
- Type
- Location

Retaining Walls 25-700
- Engineer Certification if >4’
- Not w/in 25’ of intersection if over 30” tall
- Not w/in easement

Landscaping 25-800
- 15% of lot landscaped
- No landscaping w/in utility easement
- Parking lots w/in 20’ of street, have 10’ landscape strip
- 15% of parking lot landscaped
- 10’ Landscaped islands if over 150 parking spaces

Bufferyards 25-805
- 20’ min, allowed in setback
- No utility easement in bufferyard, unless approved
- Bufferyard Type (A,B,C)
- Meets req’d # of plantings?
- 6’ fence/wall/hedge for Type C

Sidewalks 25-911
- Min. 2’-6” between sidewalk and street curb
- Not req’d if no sidewalks w/in 500’

Driveways 25-912
- Dimensions Table 25-912
- Driveway spacing 25-1005
- # of Drives allowed 25-1006

Grease Interceptor 29-5
- Req’d for food establishments

Public Sewer 29-45
- Available w/in 200’?

Utility locations OK?
- Water
- Storm Sewer
- Sanitary Sewer
- Fiber optic
- Electric

**International Building Code**
- 1104.2 ≥ 1 accessible route
- 1105.1 ≥ 60% of public entrances to be accessible
- Table 1106.1 # of Accessible parking spaces

Additional parking spaces:
- R2 and R3: ≥ 2% accessible
- Hospital outpatient: ≥ 10% accessible
- Rehab/outpatient PT: ≥ 20%

Van spaces:
- 1 for each 6 accessible spaces (1106.5)
- Detectable warnings 1109.9

HC parking:
Req’d _____ Provided _____

**ANSI 117.1-2003**
Accessible routes (Table 403.5):
- 32” wide min. if ≤ 24” long
- 36” wide min. if > 24” long
- Clear width at turn (403.5.1)
- Clear width at doorways 32” (404.2.2)
- Manuevering clearance at doors (404.2.3)

Ramps 405
- 1:12 slope max
- 1:48 cross slope max
- 36” min width
- 30” max rise of ramp run
- Landing at top and bottom
- landing 60” clear length
- Edge protection

Curb Ramps 406
- 1:20 max adjoining slope
- 1:10 max side flares
- Landing

HC Parking Spaces 502
- 8’ wide car spaces w/ 5’ wide aisle
- 11’ wide van spaces w/ 5’ wide aisle

OR
- 8’ wide van space with 8’ wide aisle

Stairways 504
- 4 to 7” risers, 11” min treads
- No open risers
- ½” max nosings, 1-1/2” projection

Handrails 505

- Handrails both sides of stairs and ramps (505.2)
- 34 to 38” mounting height
- 1-1/2” handrail clearance
- 1-1/4 to 2” handrail cross section
- Continuous at inside turn of stairs and ramps
- Extension:
  - Ramp Top & Bottom: 12”
  - Stair top: 12”
  - Stair bottom: one tread depth

**International Fire Code**

- Access w/in 150’ of each building (503.1.1)
- Min 26’ road if fire hydrant (D103.1)
- Max 10% grade for fire access roads (D103.2)
- Turn around req’mts on dead ends (D103.4)
- Gates on fire access roads 20’ min width (D103.5)
- Fire lane signage req’mts (D103.6)
- Min 26’ wide drive for buildings over 30’ tall (D105.1)

***The checklist presented here is not an exhaustive compilation of code requirements. The design professional is responsible for compliance with locally adopted Codes and Ordinances.***

**Stormwater Management Plan Review Checklist**

Project Name: _____

Stormwater file #: _____

Reviewed by: _____

Date: _____

Fee Received: _____

**General Requirements:**

Application Form:

- — Applicant name, address, telephone
- — Owner name, address, telephone
- — Design professional name, address, telephone
- — Design professional has current MO license
- — Legal description

If applicable:

- — Waiver due to zero runoff

Predevelopment Site Information:

- — Location map with adjacent roads
- — Topographic map 1:200 w/ 5'-0" intervals
- — For percolation or exfiltration systems: location & type of vegetative cover, soil types
- — Locations of streams and floodwater channels, including floodplain and floodway
- — Locations of lakes, ponds, streams, detention basins; their normal shorelines, floodplains
- — Locations of farm drains, inlets, outfalls, storm sanitary and combined sewers and outfalls, septic tank systems, seeps, springs, wells
- — Locations of nearby off-site water management facilities: wells, lakes, drainageways, affected by proposed development

Existing drainage facilities maintained/altered:

- — Size, slope, depth
- — Outfalls, receiving waters
- — Elevations, cross sections, profiles
- — Construction materials

New stormwater facilities:

- — Detention basins and other water quality elements
- — Design details

— Locate existing and proposed impervious surfaces

— Grading and paving plans and specifications

- Location and extent of Right of Way and easements

- Identify special maintenance procedures

Stormwater management system design calculations:

- Design storms used
- For detention basins: storage volumes, water surface elevations, outflow rates
- Acreages and percentages of property proposed for:
  - Impervious surfaces
  - Pervious surfaces
  - Lakes, canals, detention areas, etc
  - Total project acreage
  - Other: _____
- Runoff routing calculation showing discharge, elevations and volumes retained/detained during storm events
- Calculations for minimum building floor and road elevations
- Calculations for inlets, pipes, and ditches

**Narrative:**

- Identify potential pollution sources
- Identify project managers and their area of control
- Temporary and permanent structural and nonstructural BMPs
- BMP implementation schedule
- Temporary and permanent stabilization practices
- Dewatering methods
- Dust minimizing procedures
- Method of waste disposal
- Sources of nonstormwater discharge
- Sediment removal and disposal process
- Pollution prevention measures for nonstormwater discharges

- Site specific erosion and sediment controls

- Operation and maintenance procedures for stormwater management facilities: cleaning frequency, access routes, special equipment

- Identify party responsible for operation and maintenance

**Classification:**

- Less than 25 acres
- 25 to 200 acres
- Over 200 acres

**Stormwater Pollution Prevention Plan (SWPPP)**

Maximize allowable release rate of stormwater:

- Rate shall not exceed pre-development rate for 2- and 10-year storms
- 25-year storm shall have release rate of 15-year storm
- Calculate release rate based on total drainage area
- Storage volume based on project area only
- At minimum, storage volume for 25-year storm
- Control runoff within each watershed
- Emergency overflow facilities for 100-year storm capacity

Allowable locations for stormwater runoff channels:

- Depressed median of double roadway
- Centered on rear lot lines
- Depressed area along roadway
- Landscaped areas
- Curb and gutter that discharge into detention basin
- Drainage channels and swales

Utility drainage easement:

- Along rear lot lines < 20’ wide
- No structures
- No fences
- No shrubbery or trees

Manholes within floodplain, street for detention, or area designed for floodwater or stormwater:

- Watertight bolted manhole cover
- Watertight concealed pick-hole cover
- Rim elevation at/above 100-year flood

- Max finish grade 3:1

- Retaining walls over 30” require guards

- Grading plans for sites < 1 acre require erosion & sediment control

- Protect adjacent sites from water, erosion and sediment

- Provide 50’-0” maintenance and drainage easement along natural watercourses

**Stormwater design:**

- Detention basins: 25-year
- Primary drainage systems: 25-year
- Bridges: 50-year
- Secondary drainage systems: 15-year
- Critical areas may require 100-year, per city manager

**Calculations:**

- 0 to 25 acres: Rational Method
- Over 25 acres: Technical Release 55 (TR-55)

**Open Channels:**

- May be at rear or sides of property
- 50’-0” drainage setback from channel
- Area inlets required if flow greater than 1 cf/s, to prevent flow over sidewalks/curbs

**Inlets and junction boxes**

- Spaced per city standards
- 100-year design storm level indicated

- Building gutters may not discharge directly into city’s enclosed system

- If enclosing an existing natural drainageway that carries < 50 cf/s during design storm event, size enclosure for 50-year 20-minute storm

**Dry detention facilities:**

- 20’-0” perimeter maintenance easement
- Maximum 3:1 slopes
- Facilitate complete interior drainage to dry bottom basins
- May be secondary multipurpose recreational features
- Maximum pond limits: < 25’-0” hor. and < 2’-0” vert. from lowest building sill elevation
- Entire reservoir seeded, fertilized, mulched, sodded or paved
- Fully paved flow channels prohibited. Allowed: turf, aggregate, pavers, or approved method.

**Wet detention facilities:**

- 20’-0” perimeter maintenance easement
- Maximum 3:1 slopes
- Control elevation ≥ 2’-6” below minimum road centerline elevation
- Side slopes < 3:1 within 2’-0” vertical of control elevation, then as steep as soil allows
- For fish, > 1/4 of permanent pool minimum 10’-0” deep
- Provide maintenance plans
- Maximum pond limits: < 30’-0” hor. and < 2’-0” vert. from lowest building sill elevation

**Underground Storage:**

- Type of facility
- Depth and volume of storage
- Inlet/outlet device details and locations
- Emergency overflow provisions
- Surface and groundwater pollution control measures

**Developments adjoining floodplain for 100-year flood:**

- Indicate floodplain and floodway
- Include plans and specifications req’d for federal, state, county and local laws/regs:
  - Zoning and subdivision req’mts
  - Building code req’mts
  - Other agency req’mts

**Channel modifications:**

- Channels not altered to reduce flow
- Cross sections of existing and proposed channel
- Plan indicating existing constructions and obstructions
- Hydrographs and/or flood routing calculations and backwater curve profiles of proposed waterway for 100-year storm
- Engineering evaluation and provisions for eliminating upstream and downstream adverse impacts
- Minimum floor elevations determined by FEMA FIRM map or backwater curve profiles for 100-year storm
- Plan indicating areas reserved for flood routing, detention or storage, including restrictions, dedications and maintenance responsibilities

**Detention Storage within floodplain:**

- Net increase of storage volume above existing credited to development
- No credit for volumes below regulatory flood elevation

**Verification of adequacy** (recommended but not req’d for projects < 50 acres):

- Detention volume
- Tributary (Q) peak runoff to basin
- Balanced maximum outflow rate from low-flow structure
- Ratios of inflow to outflow rates

- Sizing of the overflow facilities
- Stability of detention dikes
- Safety features
- Maintenance features

Projects 50 to 200 acres:

- Flood routing calculations in tabulated form
- Proof of adequacy of detention volume and sizing for low-flow structure

- Projects over 200 acres: verification of adequacy according to complexity of design

**Installation of stormwater runoff control measures:**

- Positive stormwater runoff control provided during development
- Schedule of installation, construction, modification to drainage facilities
- Erosion control measures and schedule for installation

**Erosion and sedimentation control criteria:**

- State approved standards
- Tree, topsoil, vegetative cover preservation and restoration
- Surface stabilization
- Runoff control measures (berms, dikes, sediment traps, barriers, etc.)
- Inlet and outlet protection
- Stream bank protection
- Schedule development activities and protection activities for minimal impact
- Landscaped areas may be used for post-construction water quality controls

**Rights of Way and Easements:**

- Stormwater management facilities constructed w/in easement or R-O-W, and legally accessibly for maintenance
- Minimum access width:
  - Open drainage channel or facility: 50’-0” from top of bank
  - Greenways: width of greenway
  - Pipes and culvert: 20’-0” centered
  - Detention areas: 20’-0” continuous around total area
  - Connecting access: 20’-0”
- Easements must include top of bank width and maintenance access width
- Maintenance access begins at point of bank or slope of the facility
- Additional access where required by City Manager

**Maintenance Responsibility for Stormwater Management Facilities:**

- Annual inspection written report, sent to City Manager
- Control weed growth, sediment, and mosquitoes/other insects
- After occupancy, Owner responsible for maintenance
- During construction, Developer responsible for maintenance
- Performance and Maintenance Security for 2 year period after completion

- Allowable discharges: waterline flushing/potable water, landscape irrigation, diverted stream flows, groundwater, footing/foundation drains, A/C condensation, springs, non-commercial car washing, wetland flows, firefighting

***The checklist presented here is not an exhaustive compilation of code requirements. The design professional is responsible for compliance with locally adopted Codes and Ordinances.***

Plan Review Checklist

Date: _____

Permit Number: _____

Zoning: _____

Project Name:
_____

Use Group: _____

Project Address:
_____

Construction Type: _____

(If no address, notify GIS)

___ Location/Vicinity Map

___ Date Stormwater Review completed
___ Date Site Plan Review completed

___ Notify of fence permit
___ Notify of sign permit
___ IBC 2009 family, NEC 2008

Title Block Requirements

Current license for:

___ Architect
___ Civil Engineer
___ Structural Engineer
___ Mechanical Engineer
___ Electrical Engineer
___ Plumbing Engineer
___ Fire Protection

COA for:

___ Architecture
___ Civil Engineering
___ Structural Engineering
___ Mechanical Engineering
___ Electrical Engineering
___ Plumbing Engineering

___ Firm name, address, phone #

___ Signed, sealed and dated

**IBC 2009**

Table 503

Allowable Height: _____

Provided Height: _____

Allowable Area:_____

Provided Area: _____

506 Area Modifications

Frontage Increase: _____

Sprinkler Increase: _____

Total Allowable Area: _____

Chapter 3 Use Groups

402 Mall Buildings
404 Atriums
405 Underground Buildings
406 Vehicle Related
407 I-2
408 I-3
409 Projector rooms
410 Stages and Platforms
412 Aircraft Related
422 Ambulatory Health Facilities

— 423 Storm Shelters

— Vertical and horizontal separation between I-1, R-1, R-2, R-3

— 505 Mezzanines

— 507 Unlimited Area Buildings
— 508.2.5 Incidental Accessory Occupancies requiring separation

— 508.4 Required Separation of Occupancies

— Table 601 Fire Resistance of Building Elements

| | Req'd | Provided |
|---|---|---|
| Structural Frame | ___ | ___ |
| Bearing Walls Int. | ___ | ___ |
| Bearing Walls Ext. | ___ | ___ |
| Nonbearing Walls Int. | ___ | ___ |
| Floor construction | ___ | ___ |
| Roof construction | ___ | ___ |

— Table 602 Fire Resistance for Exterior Walls

| Rating | Req'd | Provided |
|---|---|---|
| X < 5' | ___ | ___ |
| 5'≤x≤10' | ___ | ___ |
| 10'≤x≤30' | ___ | ___ |
| x≥30' | ___ | ___ |

— Table 705.8 Fire separation distance and exterior wall openings

706 Fire Walls
— Table 706.4 Fire resistance ratings between Use Groups

707 Fire Barriers
— Table 707.3.9 Fire resistance ratings between Use Groups

— Table 715.4 Fire door ratings

— 717.2 Fireblocking

— 717.3, 717.4 Draftstopping

— 720 Fire Resistance Ratings of Constructions

— 903 Fire Sprinkler Req'mts

— 905 Standpipes req'd in new buildings

— 906 Fire Extinguishers

— 907 Fire Alarm

— 1004.3 Occupant Load Posted in all Assembly areas

— Table 1004.1.1 Occupant Load

| Occupancy | Req'd s.f. | Provided s.f. | Occ. Load |
|---|---|---|---|
| _____ | _____ | _____ | _____ |
| _____ | _____ | _____ | _____ |
| _____ | _____ | _____ | _____ |
| _____ | _____ | _____ | _____ |

1005 Egress Width
— .3"/occupant for stairways
— .2"/occupant for other egress components
— Door swings cannot reduce egress width more than 7"

— 1006 Means of Egress Illumination

— 1007 Accessible Means of Egress

1008 Doors, Gates
— Means of Egress Doors Min 32"
— Swing in direction of travel for > 50, or H occ.
— Landing each side of door at same elevation
— Landings > 44" in direction of travel
— Space between doors: 48" + width of door

1009 Stairways
— 44" min width
— Less than 50 occ, 36" width
— Not req'd to be solid risers if not accessible means of egress
— Handrails on each side

1010 Ramps
— 1:12 to 1:8 (8.3% to 12.5%)
— 30" max rise
— 2% max cross slope
— 36" min width between handrails

- Landings at top, bottom, turns, doors
- Landing 60" min length
- 6" rise, handrails req'd
- Edge protection: 4" min height or 12" beyond rail

1011 Exit Signs
- <100' between signs
- Not req'd at obvious exits, if approved by B.O.
- Illumination req'd
- Tactile exit sign
- 90 minute emergency power

1013 Guards
- if > 30" to surface below
- 42" min height
- 4" max openings, 6" max at triangular openings
- Req'd at rooftop mechanical equipment, within 10' of edge

1015 Exit Doorways
- Table 1015.1 Min. Occupant Load for 1 doorway
- >1 exit, > 1/2 the diagonal distance of the room served
- >1 exit, with fire sprinkler, 1/3 the diagonal distance of the room served
- 1015.3 and 1015.4 exit req'mts for mech rooms

1016 Exit Travel Distance
- Table 1016.1 Travel Distance Max

Allowed _____ Provided _____

1017 Aisles
- Groups B & M: min 36" aisle
- Group M: 30" min aisle accessway

1018 Corridors
- Table 1018.1 Corridor Fire Resistance Rating
- 44" min. width
- 36" min. if < 50 occupants
- 1018.4 Dead end corridors

1021 Exits
- Table 1021.1 Min exits for Occupant load
- Table 1021.2 Max occupants for 1 exit

1028 Assembly Exits
- > 300 occupants, main exit to accommodate 1/2 of load
- Balcony with >50 occupants, 2 exits required
- 1029.2.1 Min. height of emergency windows: 24”

1105 Accessible Entrances
- >60% of public entrances shall be accessible

1106 Parking Facilities
- Table 1106.1 Min. Accessible Parking spaces
- 1 van space per 6 required accessible parking spaces
- 1107 Min. # of Accessible Units

1108 Special Occupancies
- Table 1108.2.2.1 Accessible Seating
- 1108.2.3 Companion seat at each WC space
- 1108.2.4 Disperse WC spaces

1109 Other Features & Facilities
- 1109.2.1 Toilets for private offices not req'd to comply with ANSI 117.1
- 1109.2.4 If 1 urinal, not req'd to be accessible
- 1109.2.1 In A&M occupancies, 1 familiy toilet req'd for 6 or more req'd toilets
- 1109.2.1.4 Family toilet < 500' from single sex toilet
- 1109.4 Kitchenettes req'd to be accessible
- 1109.10 >5% of work surfaces to be accessible

1205 Lighting
- Natural or artificial lighting req'd

1209 Access
- 18x24 Crawlspace access
- 20x30 attic access

- 1210.5 Toilet rooms cannot open directly into kitchens

- 1503.6 Crickets req'd at ridge side of roof penetrations >30" wide

- 1507 Roof covering req'mts

- Ice guards at pedestrian walkways, on metal roofs

1600 Structural Design
- Floor live load (Table 1607.1)
- Roof live load (Table 1607.1)
- Ground snow load ($P_g$) (Figure 1608.2, for Cape: 15 psf)
- Flat-roof snow load ($P_f$)

- Snow exposure factor ($C_e$)
- Snow load important Factor (I)
- Thermal Factor ($C_t$)
- Basic Wind speed (3 second gust) (Figure 1609, for Cape: 90 mph)
- Wind Exposure
- Wind Importance Factor
- Wind Occupancy Category (Table 1604.5)
- Internal pressure coefficient
- Design wind pressures for exterior materials
- Seismic Design Category
- Site Class
- Seismic Importance Factor
- Seismic Occupancy Category
- Mapped Spectral Response Accelerations ($S_S$ and $S_1$)
- Spectral response coefficients ($S_{DS}$ and $S_{D1}$)
- Basic seismic-force-resisting systems
- Design base shear
- Seismic response coefficients ($C_S$)
- Response modification factors ®
- Analysis procedure used
- Soil load bearing values
- Flood design data if in flood hazard area
- 1607.5 Partition loads in office buildings: 15 psf

1804 Excavation, Grading and Fill

- 1804.3 Ground to slope 5% for first 10' adjacent to foundation
- Impervious surfaces to slope 2% for first 10' adjacent to foundation

1805 Dampproofing and Waterproofing

Dampproofing

- 1805.2.1 At floors, >6 mil polyethylene with 6" lapped joints
- 1805.2.2 On walls, 1/8" bituminous from T.O. footing to above ground level

Waterproofing

- 1805.3.1 At floors, >6 mil asphalt, rubber, HDPE or PVC w/ 6" lapped joints
- 1805.3.2 On walls, > 6mil PVC or polyethylene, or 40 mil asphalt
- 1805.4 Drain around foundation perimeter
- 1805.4.1 4" base course under basements
- 1805.4.2 Fdn. Drain extend 12" beyond ftg. 2" gravel below and 6" gravel above drain.

1809 Shallow Foundations

- 1809.4 Min depth of footings: 12", min width: 12"
- Min 18" to b.o. footing per City

- Table 1904.3 Min Compressive Concrete Strength

- 1909.6.1 Min basement and fdn wall thickness: 7.5"

- 2110 Glass Unit Masonry requirements

- Table 2304.6 Min Wall Sheathing thickness

- Table 2304.7(3) Allowable sheathing spans

- Table 2304.9.1 Fastening schedule

- 2304.11 Locations of preservative-treated wood

- 2304.11.2.6 6” min between wood siding and grade

- 2308.6 Foundation sill plates anchored with 1/2" diameter bolts, 7" embed, no more than 6' o.c.

2406.4 Safety glazing required in hazardous locations:

- Swinging doors
- Sliding doors, including fixed panes
- Storm doors
- Unframed swinging doors
- Doors for showers, tubs, saunas, etc
- Glass within 24" circle of door when glass is within 60" aff
- Glazing in a fixed or operable panel within certain dimensions
- Guards or railings
- Glazing around pools, spas, etc
- When Glazing within 60" of pool
- Glazing adjacent to stairs, ramps, landings within certain dimensions

- Safety glazing:

tempered
laminated
impact resistant plastic
Wired glass: only if complies with CPSC 16 CFR 1201 Category I & II

- 2509.2 Base for tile: glass mat water resistant panels, fiber cement or fiber-mat reinforced cement

2702 Emergency Power Systems req'd:
- Group A emergency voice/alarm systems
- Smoke control systems
- Exit signs
- Means of egress illumination
- Accessible Means of egress elevators and platform lifts
- Horizontal Sliding doors
- Semiconductor fabrication facilities
- Inflation systems for membrane structures

Occupancies with:
- Hazardous materials
- Toxic materials
- Organic peroxides/silane gas
- Pyrophoric materials
- Covered mall emergency voice/alarm systems
- High rise emergency voice/alarm systems
- Underground buildings
- Group I-3 doors
- Air traffic control towers
- Elevators
- Smokeproof enclosures

2902 Plumbing facilities
- Drinking fountains not req'd if less than 15 occupants

Separate facilities per gender unless:
- Less than 15 occupants
- Less than 50 occupants in Group M

- 2902.3 Public toilets required.

- 2903.1 Toilet rooms in daycare or childcare facilities can have one toilet without enclosure

- 2903.2 Urinal partitions required

30 Elevators
- 3002.4 If more than 4 stories, one elevator must accommodate ambulance stretcher
- 3006.2 elevator machine rooms require independent HVAC to protect electrical equip.
- 3006.4 elevator machine rooms enclosed with fire barriers
- 3102.3 Noncombustible membrane structures are type IIB
- 3102.5 Membrane structures max one story, unless only roof
- 3102.8.3 Support system req'd for membrane in case of deflation for occ load > 50 or over pool
- 3109 Swimming Pool enclosures (fence and gate req'mts)

**ANSI 117.1-2003**

- 304.3.1 or 304.3.2: 5'-0" dia. Circle or t-shaped turn around area
- 403.5: Clear Width of accessible route: 36"
- 403.5.1: Clear width at turn: 48"
- 404.2.2: 32" clear width at doorways
- 404.2.3.1: Clearances each side of doorway diagrams
- 404.2.6: Door Hardware requirements

405: Ramps
- 1:12 to 1:8 slope
- 1:48 cross-slope
- 30" max rise
- Edge protection

- 407: Elevators
- 410: Platform Lifts

502: Accessible Parking spaces:
- Access aisles join accessible route
- Aisles for car and van spaces: 60" minimum width

504.2: Treads and Risers:
- Treads: 4" to 7"
- Risers: 11" minimum

504.5: Nosings:
- ½" maximum radius
- 1-1/2" maximum projection of nosing

- 504.9: Exit door at stair shall have tactile EXIT sign

505.4: Handrails:
- 34" to 38"
- 1-1/2" space between handrail and surface
- 1-1/4" to 2" cross section
- Continuous handrail at inside turn of stairs and ramps
- Extensions at ramps: 12" minimum at top and bottom

Extension at stairs:
- Top: 12" minimum
- Bottom: one tread depth

- 602.2: Clear space at drinking fountain (30" x 48") centered on fountain
- 602.4: Spout outlet height 36" max AFF for wheelchair, 38" to 43" AFF for standing

— 603.3: Mirrors: Bottom of reflecting surface at 40” AFF

— 604.2: Water closet centerline 16” to 18” from wall

Grab Bars:
604.5.1 Side Wall Grab Bars:
— 42” bar, 12” from rear wall
— 18” vertical bar, 39” to 41” above floor, 39” to 41” from rear wall

604.5.2 Rear Wall Grab Bars:
— 36” bar, 12” from center of WC to side wall, 24” from center of WC to transfer side
— 609.4 Grab bars: 33” to 36” AFF

604.7 TP Dispensers:
— Uncontrolled delivery
— 7” to 9” from front of WC to centerline of dispenser
— 15” to 48” AFF

— 605.2 Urinals: rim 17” max AFF
— 606.3 Front of lavatory/sink 34” max AFF
— 606.6 Insulated supply & drainpipes under sink

— 705.5: Truncated Domes
— 902: Dining Surfaces and Work Surfaces
— 904 Sales and Service Counters

**IPC 2009**
— 305.1 Pipes through concrete or cinder to be externally protected against corrosion

— 305.6 water supply ≥ 24” below grade
  — 305.6.1 Building Sewer ≥ 36” below grade if PVC or clay tile, ≥ 6” if iron or concrete encased.
— Table 308.5 Pipe Hanger spacing
— 314 Condensate drain pipe slope min. 1/8” to 1’

— Table 403.1 Min. Plumbing Fixtures

| | Req’d | Provided |
|---|---|---|
| WC | _____ | _____ |
| Lav | _____ | _____ |
| Urinal | _____ | _____ |
| DF | _____ | _____ |
| SS | _____ | _____ |

— 403.3.2 No more than 500’ to restrooms

406 Clothes Washers
— Backflow preventer
— 2” min. trap and fixture drain
— 3” min. branch drain or drainage stack

407 Bathtubs
— 1-1/2” min. waste outlet

409 Dishwashers
— Backflow preventer

410 Drinking Fountains
— Not req’d in restaurants
— < 50% req’d fountains may be replaced by water coolers or bottled water
— Not installed in restrooms

412 Floor and Trench Drains
— Min 2” diameter drain outlet
— Laundry facilities 3” min. drain outlet

413 Food Waste Grinder
— 1-1/2” min waste outlet
— Commercial: separate trap from other fixtures/sinks
— Water supply req’d.

416 Lavatories
— 1-1/4” min. waste outlet
— Water tempering device

417 Showers
— 1-1/2” min. waste outlet
— Min 900 sq. in., min 30”
— 417.4.1 Area to 6’ aff smooth, noncorrosive, nonabsorbent, min 70” above drain

418 Sinks
— 1-1/2” min waste outlet

419 Urinals
— 419.2 In A&E occupancies, Urinals may replace 67% of toilets. In other occupancies, not more than 50%.
— 419.3 Surrounding material non-absorbent and readily cleanable

420 Water Closets
— 420.2 Public or employee toilets shall be elongated type

422 Healthcare fixtures
— 422.7 Service sinks not allowed for disposing of human waste
— 422.8 Ice machines not allowed in soiled utility room

423 Specialty fixtures
— 423.1 Backflow prevention

- 424.5 Max 120° hot water to bathtubs and whirlpools

500 Water Heaters
- 502.3 Space req'mts for water heaters in attics
- 504.7 Water heater pan, min 24 ga., 1-1/2" deep, min 3/4" drain pipe

600 Water Service
- 603.1 Min 3/4" water service
- 603.2 Water service and sewer separated by 5'-0", unless supply 12" above sewer. See for other exceptions.
- Table 604.4 Max flow rates for fixtures
- Table 604.5 Min Water Supply Pipe sizes
- 607.1 Hot water and tempered water req'd for bathing and washing.
- Tempered water, max of 110°
- 607.2.1 Insulation req'd for circulated hot water.
- Table 608.17.1 Distance from contamination sources to water supply lines
- Hospitals to have 2 water services

700 Sanitary Drainage
- 703.6 Min sewer size: 4"
- Table 704.1 Slopes for drain pipes

708 Cleanouts
- 708.3.1 <300' apart
- 708.3.3 At changes in direction more than 45 degrees
- 708.3.4 At the base of each waste or soil stack
- 708.7 Same size as pipe for up to 4". For larger pipes, at least 4"

- 911.1 Max 8 fixtures to be circuit vented
- 916.1 Vent size at least 1/2 diameter of the drain, at least 1-1/4"
- 1003.3.1 Where grease interceptors req'd

**IMC 2009**

- 303.3 Fuel-fired appliances not located in: sleeping rooms, bathrooms, toilet rooms, storage closets, surgical rooms
- 303.5 Fuel-fired furnaces, water heaters and boilers installed in closets shall be listed for that installation.
- 303.8 No mechanical equipment in elevator shaft.
- 304.10 Equipment on > 3" concrete above grade
- 304.11 Guards req'd at equipment if 30" AFF or grade.
- 306.1 30"x30" working space in front of each appliance
- 306.2 Doors to appliance rooms min. 36" x 80"
- 306.3 Attic access min. 20" x 30" and large enough for largest equipment
- 306.3.1 Luminaire and receptacle req'd near appliance in attic.
- 306.4 Crawlspace access min 22"x30" and large enough for largest equipment.
- 306.4.1 Luminaire and receptacle req'd near appliance in crawlspace
- 306.5 No obstructions taller than 30" to access rooftop equipment.
- 306.5 Req'mts for permanent ladders and catwalks
- 306.5.2 Receptacle req'd near rooftop unit.
- 307.2.2 Condensate drain > 3/4" and cannot decrease in size.
- 401.4 Air intake > 10' from lot lines or buildings, or contaminant source
- 501.2 Air cannot exhaust into attic or crawl space
- 501.2.11 No air exhausted air on walkways
- 502.11 Exhaust for motion picture projectors independent from building exhaust and return system.
- 504.2 Clothes dryer exhaust in fire rated walls to be galvanized steel or aluminum and maintains fire resistance.
- 504.6 Domestic dryer 4" min.
- 507 Commercial Kitchen Hoods
- Type I Hoods over grease or smoke
- Type II Hoods over heat or moisture
- 507.9 Type I Hoods min 18" to combustibles
- Table 507.11 Min. distance to cooking surface
- 507.12 Hoods min. 6" beyond edge of cooking appliance side and 4" beyond front. Flush if against noncombustible wall or panel
- 509.1 Type I Hood requires fire suppression
- 601.2.1 Corridor ceiling used as plenum if conditions met
- 602.1 No fuel-fired appliances in plenum
- 602.1 Plenum w/in one fire area.
- Table 607.3.2.1 Fire Damper ratings
- 607.5 Fire Dampers req'd at: Fire walls, fire barriers, fire partitions, corridors/smoke barriers, shaft wall, exterior wall, smoke partitions

- 607.3.3.2 Smoke detector req'd within 5' of smoke damper
- Chapter 8 Chimneys and Vents
- 802.5 Type L vents for oil-burning appliances to terminate 2' min. above highest point of roof penetration, and > 2' above building w/in 10'
- 1002.1 Water heaters removable w/out removing part of structure
- 1004.3 18" clearance around boilers
- 1004.3.1 Clearances at top of boilers
- Chapter 14 Solar Systems

**IFGC 2009**

- 303.3 Appliances not located in sleeping rooms, bathrooms, toilet rooms, storage closets or surgical rooms. Exceptions listed.
- 309.1 Gas piping cannot be used for grounding electrode.
- 404.1 No piping in ducted supply, return, exhaust, clothes chute, chimney, gas vent, dumbwaiter or elevator shaft
- 608.4 Vented wall furnace air inlet or outlets cannot be within 12" of door swings.
- 621.2 Unvented room heaters cannot be the sole source of heating for a dwelling unit.
- 625.1 Refrigerators require 2" clearance behind and 12" above.

**IECC 2009**

- 101.4.2 State and National Historic places are exempt from this code.
- 101.4.3 Additions, renovations, alterations, repairs shall comply with this code.
- 101.4 Exceptions listed for compliance

**NEC 2008**

- Check calculations on each circuit
- Check calculations on panel
- Load on circuit: 80% max of breaker size
- W=A*V

Assumptions:
Microwave, washer: 1500W
Fridge, Dishwasher, disposal: 1200W
Dryer: 4500W
Exhaust Fan: 150W

Single line diagram:

- Check conduit/raceway size per conductor:
  - Annex C if all conductors same size
  - Ch 9 Tables 4 & 5 if conductors diff size
  - Don't include ground in calculation
  - If PVC, typ Sch 40 unless in damageable location, then Sch 80
- Table 310.13 Indicates if conductor for damp, dry, wet locations
- 300.5 underground locations considered wet
- Table 310.16 Allowable ampacities of conductors
  - If not designated, assume copper
  - Always use 75 degree column
- 240.4.B Devices rated < 800A: if less than 800A, can use next higher overcurrent device rating
- 240.6 Standard ampere ratings
- Table 250.122 Min. Equipment Grounding Conductor per Rating
  - Use for grounding to panels or other equipment
- Table 250.66 Grounding Electrode Conductor: for service entrance conductors, transformers, generators
  - Look at largest service entrance conductor to determine grounding electrode conductor size
- Table 210.2 Specific-Purpose Branch Circuits
- 210.8 GFCI in Dwelling units:
  - Bathrooms
  - Garages/Accessory Buildings
  - Outdoors
  - Crawl spaces
  - Unfinished basements
  - Kitchen countertops
  - Laundry/Utility/Wet bar sinks, if outlet w/in 6' of sink edge
  - Boathouses

- GFCI not in Dwelling Units:
  - Bathrooms
  - Kitchens
  - Rooftops
  - Outdoors
  - w/in 6' of sink edge
  - drinking fountains

- 210.11 Branch Circuits in Dwellings
  - Small appliance: (2+) 20A small appliance circuits at kitchen counters
  - Landry: (1) 20A laundry circuit
  - Bathroom: (1) 20A, circuit dedicated to bathroom

- 210.19 Min. ampacity = noncontinuous load + 125% of continuous load
- Table 210.21.B.2 Max Load:

| Circuit Rating | Max Load |
|---|---|
| 15 or 20 | 12 |
| 20 | 16 |
| 30 | 24 |

- Table 210.24 Conductor size per amperage

| Circuit Rating | Conductor Ga. |
|---|---|
| 15A | 14 |
| 20A | 12 |
| 30A | 10 |
| 40A | 8 |
| 50A | 6 |

- 210.25 Circuits to supply only w/in each dwelling unit
- 210.25 Dwelling circuits not to supply common area circuits
- 210.50 Appliance receptacles w/in 6’ of appliance.
- 210.52.A.1 12’ max between dwelling unit receptacles
- 210.52.A.3 Floor receptacles don’t count toward req’d receptacles unless within 18” of wall
- 210.52.C.1 48” max between countertop receptacles
- 210.52.C.2 Receptacle req’d in island
- 210.52.D Receptacle w/in 3’ of lavatory
- 210.52.E.1 1&2 family dwellings: (1) receptacle required w/in 6.5’ above grade at front and rear of dwelling
- 210.52.E.2 Multifamily dwellings: (1) receptacle accessible w/in 6.5’ above grade for each unit
- 210.52.E.3 receptacle req’d w/in 6.5’ above balcony/deck/porch
- 210.52.F Receptacle req’d for laundry
- 210.52.G Receptacle req’d in each section of basement, garage (finished or unfinished)\
- 210.52.H 10’ max between receptacles in hallways
- 210.62 (1) receptacle w/in 18” of show windows, for each 12’

- 220.14.F Sign lighting calculated at ≥ 1200W per circuit
- 220.14.G Show windows calculated at 200W per foot of window
- 220.14.I Receptacles calculated at ≥ 180W per receptacle
- 220.43.B Track lighting calculated at ≥ 150W per 2’ of track
- 220.52.A Small appliance circuits calculated at 1500W per circuit
- 220.52.B Laundry circuit calculated at 1500W per circuit
- 220.54 Electric Clothes Dryer: 5000W

- 225.39 Disconnect Rating
  - One family dwelling: 100A
  - All others: 60A

- 230.70.A.1 Service disconnect outside building or inside near service entrance.
- 230.70.A.2 No disconnects in bathrooms.

- 240.24.D No overcurrent devices by easily ignitable material.
- 240.24.E No overcurrent devices in bathrooms
- 240.24.F No overcurrent devices over stairs
- 250.52 Grounding electrodes:
  - Metal underground water pipe ≥ 10’
  - Metal building frame, single structural member ≥ 10’
  - Concrete encased in ≥ 2” concrete for ≥ 20’, 4AWG
  - Ground ring contacting bare earth ≥ 20’ of 2AWG, 30” below grade
- 250.106 Lightning protection system grounded to building or structure grounding electrode system.
- 406.4.E. Receptacles cannot be installed faceup in countertops or work surfaces
- 406.8.C. Receptacles cannot be installed w/in or over shower or bathtub
- 406.11 Tamper resistant receptacles in dwelling units
- 410.10.D No lights w/in 8’ vertically or 3’ horizontally of bathtub rim or shower threshold
- 410.10.D Lights w/in tubs or showers to be marked for damp/wet location
- 410.16.B Closets cannot have open incandescent bulbs
- 410.16.D Min. clearances in closets:
  - 12” for surface mounted LED or Incandescent
  - 6” for surface mounted fluorescent
  - 6” for recessed incandescent or LED
  - 6” for recessed fluorescent
  - No min. for surface mounted fluorescent or LED marked for use

- 411.4.B No receptacles w/in 3’ of spas/fountains

- 422.16.B.4 Range hoods can be cord & plug if 18 to 36" cord and individual branch circuit.
- 422.52 GFCI for drinking fountains
- 511 Commercial Garages, Repair and Storage
- 511.12 GFCI receptacles in service garages for diagnostic equipment, electric hand tools or portable lighting
- 513 Aircraft Hangars
- 513.12 GFCI receptacles in aircraft hangars, same as 511.12
- 514 Fuel Dispensing Facilities
- 517 Health Care Facilities
- 517.18 General Care Areas:
  - 2 branch circuits: 1 normal, 1 emergency
  - Min. 4 receptacles
  - Hospital grade receptacles
  - Pediatric locations, tamper resistant receptacles
- 517.19 Critical Care Areas
  - 2 branch circuits: 1 normal, 1 emergency
  - Min. 6 receptacles
  - Hospital grade receptacles
  - Emergency receptacles identified by panel and circuit number
- 517.30 Essential Electrical Systems
  - Emergency system for life safety and critical patient care
  - Equipment system for major electrical equipment for patient care and basic hospital operation
  - Emergency system receptacles to have distinctive color or marking
- 517.32 Life Safety Branch:
  - Means of Egress Illumination
  - Exit Signs
  - Fire Alarms and Non-flammable medical gas alarms
  - Communication system
  - Generator set and transfer switch lighting and receptacle
  - Generator set accessories
  - Elevators
  - Automatic doors for building egress
- 517.33 Critical Branch
  - Task illumination and select receptacles in:
    - Areas for anesthetizing gas
    - Patient care areas for infant nurseries, medication prep, pharmacy, acute nursing, psychiatric bed areas, ward treatment rooms, nurses' station
    - Specialized patient care areas
    - Nurse call systems
    - Blood, bone, tissue banks
    - Telephone equipment rooms and closets
    - Task illumination, select receptacles and power circuits for 1 duplex receptacle per general care bed, angiographic lab, cath labs, coronary care units, ER treatment rooms, human physiology labs, ICU, Post-Op recovery rooms
    - Additional illumination and receptacles for hospital operation
- 517.34 Equipment for delayed automatic connection:
  - Central suction systems
  - Sump pumps
  - Compressed air
  - Smoke control/pressurization systems
  - Kitchen hood/exhaust systems
  - Supply/return/exhaust for infectious, isolation, lab fume hoods, nuclear med, others
  - Supply/return/exhaust for OR and LDR rooms
- 517.34 Equipment for delayed automatic or manual connection:
  - Heating equipment for OR, LDR, ICU, coronary care, nurseries, infection/isolation/ER, general patient rooms, etc.
  - Elevators
  - Hyperbaric facilities
  - Hypobaric facilities
  - Automatic doors
  - Autoclave equipment
- 517.42 Nursing Home Life Safety Branch:
  - Means of Egress Illumination
  - Exit signs
  - Fire alarms and alarms for nonflammable med gas
  - Communication system
  - Dining/Rec areas
  - Generator location
  - Elevators
- 517.43 Nursing Home Critical Branch

Delayed automatic connection:

- Patient care, incl med prep, pharmacy and nurses' stations
- Sump pumps
- Smoke control/pressurization systems
- Kitchen hood/exhaust
- Supply/return/exhaust for infectious isolation rooms

Delayed automatic or manual connection:

- Heating for patient rooms
- Elevator
- Additional illumination, receptacles and equipment

- 520.41 Theater footlights, border and proscenium lights in circuits > 20A
- 530 TV Studios
- 540 Projector rooms
- 551 RV Parks
- 600.5 20A outlet req'd at each entrance to tenant commercial space for signage, for no other load
- 600.5.A.2 Neon tubing branch circuits > 30A
- 605 Office Furnishings
- 620 Elevators
- 625 Electric Vehicle Charging System
- 640 Audio Equipment
- 645 IT Equipment
- 660 Xray Equipment
- 680 Pools, Spas, Fountains
- 690 PV Systems
- 695 Fire Pumps
- 700 Emergency Systems
- 760 Fire Alarms

# APPENDIX D

Construction Trades Licenses
Citizen Board and Commission Submittal Deadlines
Citizen Board and Commission Information

# Construction Trades Licenses

The Board of Examiners has been created to review applicants requesting licensing for the construction trades. The Board of Examiners meets the first Wednesday of each month in the City Council chambers.

Trades that are required to obtain a license are as follows:

a. Master plumber
b. Journeyman plumber.
c. Mechanical installer.
d. Master drainlayer.
e. Master electrician.
f. Journeyman electrician.
g. Residential electrician.
h. Electrical maintenance.
i. Sign contractor, electrician.
j. Construction contractor.
k. Plumbing fixture installer.

The annual fee for construction trades licenses is $35.00 for each license. The licenses expire April 1st of each year and can be renewed by the payment of the license fee.

Any person applying for a construction trades license shall provide a certificate of liability insurance, minimum amount being $300,000, and a certificate of Workmen's Compensation to the Inspection Services Division.

Examinations are required before issuing a license for all trades EXCEPT construction contractor and plumbing fixture installer.

Please contact the Inspection Services Division for more details on construction trades licensing and the examinations required.

**CITIZEN BOARDS AND COMMISSIONS SUBMITTAL DEADLINES**

**Board of Adjustment- 15 days prior to Meeting Date**
**Board of Appeals- 12 days prior to Meeting Date**
**Board of Examiners- 12 days prior to Meeting Date**
**Historic Preservation Commission- First Wednesday of the month**
**Planning and Zoning Commission- 2nd to the last Wednesday of the month**

## CITIZEN BOARDS AND COMMISSIONS INFORMATION

### Board of Adjustment

Five regular members and three alternate members appointed by City Council to serve a five-year term. Meetings held first Thursday at 7:00 p.m. in the City Council Chambers. Staff contact – City Planner.

- Hears and decides appeals from decisions of the building official in the enforcement of the zoning ordinance.
- Hears requests for variances from provisions of the zoning ordinance where strict enforcement would cause undue hardship due to circumstances unique to the individual under consideration.
- The Board of Adjustment shall not permit, as a variance, any use in a district that is not permitted under the zoning ordinance. The Board may impose conditions in the granting of variances to insure compliance and to protect adjacent property.

### Board of Appeals

Seven members appointed by City Council to serve a five-year term. No more that two members from each of the following professions:
(1) Registered design professional that is a registered architect or a building or superintendent of building construction with at least 10 years experience;
(2) Registered design professional with structural engineering or architectural experience;
(3) Registered design professional with mechanical or plumbing engineering experience or a mechanical or plumbing contractor with 10 years experience;
(4) Registered design professional with electrical engineering experience or an electrical contractor with at least 10 years experience;
(5) Registered design professional with fire protection engineering experience or a fire protection contractor with at least 10 years experience.

Meetings held second Thursday at 7:00 p.m. in the City Council Chambers. Staff contact – Inspection Services Director.

- Board members required to have specialized knowledge in engineering, architecture, or building trades in order to address all appeals dealing with building codes and minimum property standards.
- Reviews ordinances and makes recommendations to the City Council.
- Reviews disputes in decisions of the Building Official.

### Board of Examiners

Eight members appointed by the City Council to serve a three-year term. Seven members must be licensed in and actually engaged in working at one of the construction trades at the time of appointment. Four members must have six years practical experience in their construction trade, and no more that two of each of the following: plumber, mechanical installer, electrician, construction contractor, master drainlayer or plumbing fixture installer. One member need not be a licensed practitioner of the construction trades. Meetings held 1st Wednesday of every month at 7:00 p.m. in the City Council Chambers. Staff contact – Inspection Services Director.

- Board members must be licensed tradesmen.
- Accepts and reviews applications for all tradesman licensing.

- Reviews licensing ordinance and makes recommendations to the City Council.

## Historic Preservation Commission

Nine members appointed by City Council to serve a three-year term. Meetings held third Wednesday at 7:00 p.m. in the City Council Chambers. Staff contact – City Planner.

- Administers the City's Historic Preservation program and advises the Planning and Zoning Commission and City Council on matters relating to Historic Preservation.
- Accepts and reviews applications for designation of local historic landmarks and historic districts.
- Recommends designation to Planning and Zoning Commission and City Council.
- Accepts and reviews applications for nomination to the National Register of Historic Places.
- Plans for Historic Preservation in the community.
- Educates community on historic preservation.

## Planning and Zoning Commission

Nine members appointed by City Council to serve a four-year term. Meetings held second Wednesday at 7:00 p.m. in the City Council Chambers. Staff contact – City Planner.

- Prepares and maintains comprehensive plan for development of the community, including the city's major street plan.
- Accepts and reviews applications for zoning changes and special use permits and recommends actions to the City Council.
- Reviews preliminary and record subdivision plats and recommends action on these to the City Council.
- Recommends changes in the City's zoning ordinances, subdivision regulations, and floodplain management regulations to the City Council.
- Reviews variances from the Development Code

# APPENDIX E

Permit Applications
Other Forms

## Development Team

Alliance Water Resources: Kevin Priester
Engineering Services Division: Casey Brunke
Inspection Services Division: Inspection Services Director, Anna Kangas
Planning Services Division: Ryan Shrimplin, Martha Brown
Fire Department: Rick Ennis, Brian Shaffer
Public Works Department: Stan Polivick

# Chapter 7 BUILDINGS [1]

ARTICLE I. - IN GENERAL

ARTICLE II. - BUILDING CODE

ARTICLE III. - PLUMBING CODE

ARTICLE IV. - MECHANICAL CODE

ARTICLE V. - ELECTRICAL CODE

ARTICLE VI. - FIRE CODE

ARTICLE VII. - DANGEROUS BUILDINGS

ARTICLE VIII. - INTERNATIONAL PROPERTY MAINTENANCE CODE 2009

ARTICLE IX. - 2009 INTERNATIONAL RESIDENTIAL CODE FOR ONE AND TWO FAMILY DWELLINGS

ARTICLE X. - INTERNATIONAL FUEL GAS CODE 2009

ARTICLE XI. - INTERNATIONAL EXISTING BUILDING CODE 2009

ARTICLE XII. - INTERNATIONAL ENERGY CONSERVATION CODE 2009

---

FOOTNOTE(S):

---

--- (**1**) ---

**Editor's note—** Ord. No. 935, adopted Oct. 22, 1990, repealed the following sections of the 1967 Code and enacted new provisions in lieu thereof: §§ 7-1—7-8, 10-1—10-9, 10-11, 10-22—10-29, 11-2—11-5, 14-1—14-5, 14-15—14-17, 21-1—21-16, 21-10—21-12, 21-23, 21-30(F), (G), (J), from which ch. 7, arts. II—V, VII, §§ 11-27—11-30, 29-234, 29-235, 29-237 and 29-238 of this Code were derived. The provisions previously contained in ch. 7, arts. II—V and VII pertained to the building, plumbing, mechanical and electrical codes, and to inspection and permit fees. For the subject matter of the repealed provisions in chs. 11 and 29, refer to the editor's footnote regarding such former provisions. The new provisions enacted by Ord. No. 935 read as set out in arts. I—VI. (Back)

**Cross reference—** Fire prevention and protection, ch. 11; floodplain management regulations, ch. 12; housing, ch. 14; licenses and business regulations, ch. 15; travel trailer camps, mobile homes and mobile home parks, ch. 27; urban redevelopment, ch. 28; water and sewers, ch. 29; zoning, ch. 30; community development department, § 2-46; reckless burning or exploding, § 17-46; stormwater management system design requirements, § 23-10; street numbering system, § 24-1; use of streets or sidewalks for

building purposes, § 24-7; subdivision regulations, ch. 25; major street plan, § 30-98; building lines, § 30-99. (Back)

**State Law reference—** Authority of city to regulate and control the construction of buildings, RSMo, § 77.500; nuisance buildings, RSMo, § 67.400 et seq. (Back)

## ARTICLE I. IN GENERAL [2]

Sec. 7-1. Declaration of public necessity.

Sec. 7-2. Conflicting provisions.

Sec. 7-3. Prior ordinances.

Sec. 7-4. Liability of city.

Sec. 7-5. Penalties for violations.

Sec. 7-6. Permit/inspection fees.

Sec. 7-7. Exemptions from permit and inspection fees.

Secs. 7-8—7-25. Reserved.

### Sec. 7-1. Declaration of public necessity.

It is hereby found and determined that the adoption of the 2009 International Building Codes, the 2009 International Plumbing Code, the 2009 International Mechanical Code, the 2009 International Fuel Gas Code, the 2008 National Electrical Code, the 2009 International Fire Prevention Code, the 2009 International One and Two Family Residential Code, the 2009 International Property Maintenance Code, the 2009 International Existing Building Code, the 2009 International Energy Conservation Code and the amendments and additions thereto as hereinafter delineated throughout chapter 7 of the Code of Ordinances of the city, all to be known collectively as the "Cape Girardeau Construction Codes," is necessary for the establishment of minimum standards for the promotion of the public health and safety of the citizens of the city.

(Ord. No. 935, art. 2, 10-22-90; Ord. No. 1671, art. 1, 2-6-95; Ord. No. 2079, art. 1, 11-18-96; Ord. No. 3154, art. 1, 3-17-03; Ord. No. 3546, art. 1, 9-6-05; Ord. No. 4268, art. 1, 9-19-11)

### Sec. 7-2. Conflicting provisions.

Where the provisions of the 2009 edition of the International Building Code, the 2009 International One and Two Family Residential Code, the 2009 edition of the International Plumbing Code, the 2009 edition of the International Mechanical Code, the 2008 edition of the National Electrical Code, the 2009 edition of the International Fire Prevention Code, the 2009 edition of the International Fuel Gas Code, the 2009 edition of the International Property Maintenance Code, the 2009 edition of the International Existing Building Code and the 2009 International Energy Conservation Code are in conflict with the provisions of the Code of Ordinances of the city, the provisions of the Code of Ordinances shall prevail.

(Ord. No. 935, art. 2, 10-22-90; Ord. No. 1671, art. 2, 2-6-95; Ord. No. 2079, art. 2, 11-18-96; Ord. No. 3154, art. 2, 3-17-03; Ord. No. 3546, art. 2, 9-6-05; Ord. No. 4268, art. 2, 9-19-11)

### Sec. 7-3. Prior ordinances.

The adoption and enactment of the construction codes referred to hereinabove shall not affect the validity of any permits granted under prior ordinances and shall not affect any offense or act committed or done or any penalty or forfeiture incurred before the effective date of this chapter.

(Ord. No. 935, art. 2, 10-22-90)

### Sec. 7-4. Liability of city.

The adoption of the construction codes shall not be construed as imposing upon the city any liability or responsibility for damages to any person injured by any defect in any device mentioned herein or by installation thereof, nor shall the city or any official or employee thereof be held as assuming any liability or responsibility by reason of the inspection authorized hereunder or certificate of inspection issued by the inspector.

(Ord. No. 935, art. 2, 10-22-90)

### Sec. 7-5. Penalties for violations.

(a) *Violations generally.* It is hereby declared to be unlawful for any person to violate a provision of the construction codes or to fail to comply with any of the requirements thereof or to erect, construct, alter or repair a building or structure in violation of approved plan or directive of the code official or of a permit or certificate issued under the provisions of this chapter.

(b) *Penalties.* Each violation of the construction codes shall be punishable by a fine of not more than five hundred dollars ($500.00) per day for each day the violation exists or continues, or imprisonment for a term not to exceed ninety (90) days, or both, at the discretion of the court.

(c) *Unlawful continuances.* Any person who shall continue any work in or about the structure after having been served with a stop work order, except such work as he is directed to perform or to remove a violation or unsafe condition, shall be liable to a fine of not less than fifty dollars ($50.00) per day nor more than five hundred dollars ($500.00) for each day the work continues.

(d) *Demolition of buildings.* Any person who fails to demolish any building for which a permit to demolish was issued within the time required by the provisions of this chapter or the permit shall, upon conviction, be punished by a fine not to exceed five hundred dollars ($500.00) for each day in excess of the time limit of the permit that it takes to demolish the building, or by imprisonment not to exceed ninety (90) days, or by both such fine and imprisonment.

(Ord. No. 935, art. 2, 10-22-90; Ord. No. 4278, art. 1, 11-21-11)

### Sec. 7-6. Permit/inspection fees.

(a) *Fees.* Permit and inspection fees shall be as indicated in the city fee schedule.

(Ord. No. 935, art. 2, 10-22-90; Ord. No. 1671, art. 3, 2-6-95; Ord. No. 2079, art. 3, 11-18-96; Ord. No. 3154, art. 3, 3-17-03; Ord. No. 3546, art. 3, 9-6-05; Ord. No. 4268, art. 3, 9-19-11)

### Sec. 7-7. Exemptions from permit and inspection fees.

Unless otherwise required by the City Code, the following operations are exempt from the terms and provisions of this chapter requiring a permit and inspection fees:

(1) New roof covering involving only the roof surface, and where the new covering complies with the provisions of this chapter.

(2) Ordinary independent heating appliances, when installed in compliance with the provisions of this chapter, excepting permanent heating systems for buildings.

(3) One-story detached accessory structures with an area not exceeding one hundred fifty (150) square feet and otherwise conforming to the provisions of this chapter.

(Ord. No. 935, art. 2, 10-22-90; Ord. No. 3546, art. 4, 9-6-05; Ord. No. 4268, art. 4, 9-19-11)

**Secs. 7-8—7-25. Reserved.**

---

FOOTNOTE(S):

---

--- (**2**) ---

**Note—** See the editor's footnote to the title of this chapter. (Back)

## ARTICLE II. BUILDING CODE [3]

Sec. 7-26. Short title.

Sec. 7-27. International Building Code/2009—Adopted.

Sec. 7-28. Same—Amendments.

Sec. 7-29. Permit for demolishing buildings—Requirements for issuance; waiver of requirements.

Secs. 7-30—7-50. Reserved.

### Sec. 7-26. Short title.

This article shall be known and may be cited as the "building code."

(Ord. No. 935, art. 2, 10-22-90)

### Sec. 7-27. International Building Code/2009—Adopted.

The city hereby adopts the 2009 edition of the International Building Code, published by International Code Council, Inc., as amended in section 7-28 of this Code. Three (3) copies of the 2009 edition of the International Building Code are on file in the office of the city clerk and are available for public use, inspection and examination. The 2009 edition of the International Building Code is hereby incorporated by reference into the Code of Ordinances of the city as though fully set out herein.

(Ord. No. 935, art. 2, 10-22-90; Ord. No. 1671, art. 4, 2-6-95; Ord. No. 2079, art. 4, 11-18-96; Ord. No. 3154, art. 4, 3-17-03; Ord. No. 3546, art. 5, 9-6-05; Ord. No. 4268, art. 5, 9-19-11)

### Sec. 7-28. Same—Amendments.

The 2009 International Building Code adopted by this article is hereby modified and amended in the following respects:

(1) *Section 101.1* is hereby modified, changed and amended to read as follows:

"Title. These regulations shall be known as the building code of the City of Cape Girardeau, Missouri, hereinafter referred to as "this code"."

(2) *Section 103.1* is hereby modified, changed and amended to read as follows:

"Creation of Enforcement Agency. The Division of Inspection Services is hereby created and the official in charge shall be known as the building official."

(3) *Section 103.2* is hereby modified, changed and amended to read as follows:

"Appointment. The code official shall be appointed by the city manager."

(4) *Section 105.1.1, Annual permit,* is hereby repealed in its entirety.

(5) *Section 105.1.2, Annual permit records,* is hereby repealed in its entirety.

(6) *Section 109.7, Re-inspection Fee,* add "a re-inspection fee, as established in the City Fee Schedule, after the third inspection for similar inspections.

(7) *Section 113.3, Qualifications,* is hereby repealed in its entirety and Appendix B Board of Appeals is substituted in its stead.

(8) *Section B101.2* is hereby modified, changed and amended to read as follows:

"Membership of the Board: The board of appeals shall consist of seven (7) members who shall serve for terms of five (5) years each and shall be appointed by formal motion and majority action of the City Council. Thereafter, each new member shall serve for five (5) years or until a successor has been appointed."

(9) *Section B101.2.1* is hereby modified, changed and amended to read as follows:

"Alternate members. The City Council may appoint two (2) alternate members who shall be called by the board chairman to hear appeals during the absence or disqualification of a member. Alternate members shall possess the qualifications required for board membership, and shall be appointed for five (5) years or until a successor has been appointed."

(10) *Section B01.2.2.* The first paragraph is hereby modified, changed and amended to read as follows:

"Qualifications. The board of appeals shall consist of seven (7) individuals who shall be residents of the city, not more than two (2) from each of the following professions or disciplines: Registered design professional that is a registered architect or builder or superintendent of building construction with at least 10 years experience; registered design professional with structural engineering or architectural experience; registered design professional with mechanical or plumbing, engineering experience or a mechanical or plumbing contractor with 10 years experience; registered design professional with electrical engineering experience or an electrical contractor with at least 10 years experience; registered design professional with fire protection engineering experience or a fire protection contractor with at least 10 years experience."

(11) *Section B101.3.3, Postponed Hearing,* is hereby modified, changed and amended to read as follows:

"Postponed Hearing. When a full board is not present to hear an appeal, either the appellant or the appellant's representative shall have the right to request a postponement of the hearing."

(12) *Section B101.4, Board Decision,* is hereby created to read as follows:

"Board Decision. The board shall modify or reverse the decision of the code official by a concurring vote given by the majority of the members present at a meeting where a quorum exists."

(13) *Section 114.4* is hereby created to read as follows:

"Violation Penalties. Any person who shall violate a provision of this code, or fail to comply therewith, or with any of the requirements thereof, shall upon conviction thereof, be subject to a fine of not less than fifty dollars ($50.00) per day nor more than five hundred dollars ($500.00) per day for each day the violation exists or continues, or imprisonment for a term not to exceed ninety (90) days, or both, at the discretion of the court."

(14) *Section 115.3* is hereby modified, changed and amended to read as follows:

"Unlawful Continuance. The violation of this section shall be punished by a fine not exceeding five hundred dollars ($500.00) per day for each day the unlawful continuance exists or by imprisonment not exceeding three (3) months, or by both such fine and imprisonment."

(15) *Section 202, Definitions,* amend Sleeping Unit to Read as follows:

"Sleeping Unit. Is defined to mean any room in the dwelling that is greater than seventy (70) square feet and has a built in closet space and typically could be used as a bedroom. This does not include rooms used for cooking, eating, family living or gathering and excludes bathrooms, toilet rooms, halls, storage, utility and workshop space and all unconditioned space."

(16) *Section 1008.1.9.8* is hereby amended to read as follows:

"Electromagnetically locked egress doors. Doors in the means of egress that are not otherwise require to have panic hardware in buildings with an occupancy in Group A, B, E, M, R-1, R-2, I-1 and I-2."

(17) *Section 1013.7* is hereby created to read as follows:

"Horizontal balusters. Shall be prohibited in locations where guards are required."

(18) *Section 1612.3* is hereby created to read as follows:

"Establishment of Flood Hazard Areas. To establish flood hazard areas, the governing body shall adopt a flood hazard map and supporting data. The flood hazard map shall include, at a minimum, areas of special flood hazard as identified by the Federal Emergency Management Agency in an engineering report entitled "The Flood Insurance Study for the City of Cape Girardeau, Missouri," latest edition of the flood map, as amended or revised with the accompanying Flood Insurance Rate Map (FIRM) and flood Boundary and Floodway Map (FBFM) and related supporting data along with any revisions thereto. The adopted flood hazard map and supporting data are hereby adopted by reference and declared to be part of this section."

(19) *Section 3107.2, Bonds and Liability Insurance,* is hereby modified, changed and amended to read as follows:

"Filing. A person shall not erect, install, remove, rehang or maintain over public property any sign for which a permit is required under the provisions of this Code until an approved bond shall have been filed in the sum of one million dollars ($1,000,000.00) as herein required or until an insurance policy shall have been filed for public liability in the amount of one million dollars ($1,000,000.00) per accident and for property damage in the amount of one hundred thousand dollars ($100,000.00) as herein required."

(20) *Section 3107.2.1, Signs, General,* is hereby created to read as follows:

"Conditions. Such bond or insurance policy shall protect and hold the jurisdiction harmless from any and all claims or demands for damages by reason of any negligence of the sign hanger, contractor or agent, or by any reason of defects in the construction, or damages resulting from the collapse, failure or combustion of the sign or parts thereof."

(21) *Section 3107.2.2 Signs, General,* is hereby created to read as follows:

"Notice of Cancellation. The obligation herein specified shall remain in force and in effect during the life of every sign and shall not be canceled by the principal or surety until after a thirty (30) day notice to the code official."

(22) *Section 3401.2* is hereby modified, changed and amended to read as follows:

"Maintenance and Repairs. The owner shall be responsible for the maintenance and repair of structures in accordance with the maintenance requirements of the code, the Cape Girardeau Property Maintenance Code and the Fire Prevention Code listed in Chapter 35."

(23) *Section 3401.2.1* is hereby created to read as follows:

"Periodic Testing. The owner shall be responsible for periodic tests and inspections of all equipment where required by this code, the Cape Girardeau Property Maintenance Code and the Fire Prevention Code listed in Chapter 35."

(24) *Section 3412.2, Applicability,* is hereby modified, changed and amended to read as follows:

"Applicability. Structures existing prior to date of adoption of this code, in which there is work involving additions, alterations or changes of occupancy, shall be made conform to the requirements of this section or the provisions of Section 3403 through 3409. The provisions in Section 3412.2.1 through 3412.2.5 shall apply to existing occupancies that will continue to be, or are proposed to be, in Use Groups A, B, E, F, M, R, S and U. These provisions shall not apply to buildings with occupancies in Use Group H or I."

(Ord. No. 935, art. 2, 10-22-90; Ord. No. 1671, art. 5, 2-6-95; Ord. No. 1734, art. 1, 6-19-95; Ord. No. 1810, art. 1, 10-16-95; Ord. No. 1852, arts. 1—3, 1-8-96; Ord. No. 1961, § 1, 6-3-96; Ord. No. 2079, art. 5, 11-18-96; Ord. No. 2104, art. 1, 12-16-96; Ord. No. 2701, art. 8, 4-3-00; Ord. No. 3040, art. 1, 8-19-02; Ord. No. 3154, art. 5, 3-17-03; Ord. No. 3546, art. 6, 9-6-05; Ord. No. 4268, art. 6, 9-19-11; Ord. No. 4278, art. 2, 11-21-11; Ord. No. 4403, art. 1, 12-17-12)

## Sec. 7-29. Permit for demolishing buildings—Requirements for issuance; waiver of requirements.

(a) Any permit to demolish a building, issued pursuant to Section 3303 Demolition of the International Building Code, shall be limited to a maximum of forty-five (45) days from the date of issuance. The permit expiration date shall be clearly stated on the face of the permit card and all demolition and site restoration work must be completed by said posted date.

(b) Notwithstanding the time limit established in subparagraph (a), once the building has been demolished, all debris must be removed within ten (10) days. The code official shall cause periodic inspections to assure compliance.

(c) The code official may, upon written request, extend the time limits referred to herein for good cause shown; however, such extensions shall be granted only at the discretion of the code official.

(Ord. No. 935, art. 2, 10-22-90; Ord. No. 1949, § 1, 5-6-96; Ord. No. 4403, art. 2, 12-17-12)

## Secs. 7-30—7-50. Reserved.

---

FOOTNOTE(S):

---

--- (**3**) ---

**Note—** See the editor's footnote to the title of this chapter. (Back)

## ARTICLE III. PLUMBING CODE [4]

Sec. 7-51. Title.

Sec. 7-52. International Plumbing Code/2009—Adoption.

Sec. 7-53. Same—Amendments.

Sec. 7-54. Sewer and water supply data.

Sec. 7-55. Defective plumbing and drainlaying.

Sec. 7-56. Building sewer installation.

Sec. 7-57. Regulations governing individual sewage disposal systems for homes and other establishments where public sewage systems are not available.

Sec. 7-58. Permits.

Sec. 7-59. Septic tank bypass.

Sec. 7-60. Building sewer connections.

Secs. 7-61—7-175. Reserved.

### Sec. 7-51. Title.

This article shall be known and may be cited as the "Plumbing Code of the City of Cape Girardeau, Missouri."

(Ord. No. 935, art. 4, 10-22-90)

### Sec. 7-52. International Plumbing Code/2009—Adoption.

The city hereby adopts the 2009 edition of the International Plumbing Code published by the International Code Council, Inc., as amended in section 7-53 of this Code. Three (3) copies of the 2009 edition of the International Plumbing Code are on file in the office of the city clerk and are available for public use, inspection and examination. The 2009 edition of the International Plumbing Code is hereby incorporated into the Code of Ordinances of the city by reference as though fully set out herein.

(Ord. No. 935, art. 4, 10-22-90; Ord. No. 1671, art. 6, 2-6-95; Ord. No. 2079, art. 6, 11-18-96; Ord. No. 3154, art. 6, 3-17-03; Ord. No. 3546, art. 7, 9-6-05; Ord. No. 4268, art. 7, 9-19-11)

### Sec. 7-53. Same—Amendments.

The 2009 International Plumbing Code adopted by this article is hereby modified and amended in the following respects:

(1) *Section 101.1* is amended to read as follows:

"Title. These regulations shall be part of the plumbing code of the City of Cape Girardeau, Missouri, hereinafter referred to, as "this code"."

(2) *Section 102.2* is amended to read as follows:

"Existing Installation. The legal use and occupancy of any structure existing on the date this code is adopted, or for which it had been heretofore approved, may be continued without change except as may be specifically covered in this code or deemed necessary by the code official for the general safety and welfare of the occupants and the public."

(3) *Section 103.2* is hereby amended to read as follows:

"Appointment. The code official shall be appointed by the city manager."

(4) *Section 106.6.2, Fee Schedule,* is hereby deleted.

(5) *Section 106.6.3, Fee Refunds,* is hereby deleted.

(6) *Section 109.1* is hereby repealed and a new section 109.1 entitled "Application of Appeal" is hereby enacted as follows:

"Application of appeal. Any person shall have the right to appeal a decision of the code official to the board of appeals as set out in section 112.1 of the International Building Code/2009, as amended."

(7) *Section 109.2, Membership of Board,* is hereby modified, changed and amended to read as follows:

"Membership to the Board of Appeals shall be according to Section 112.3 of the 2009 International Building Code, as amended."

(8) *Section 305.6, Freezing,* is hereby modified, changed and amended, to read as follows:

"A water, soil, or waste pipe shall not be installed outside of a building, or concealed in outside walls or in any place subject to freezing temperatures, unless adequate provision is made to protect such pipe from freezing by insulation or heat or both. Water service piping shall be installed below recorded frost penetration but not less than twenty-four (24) inches below grade."

(9) *Section 305.6.1, Sewer Depth,* is amended to read as follows:

"Building sewer lines shall be a minimum of thirty-six (36) inches below grade if of PVC or clay material and a minimum of six (6) inches below grade if of cast iron, ductile iron or concrete encased material."

(10) *Section 608.16(2), Connection to Boilers,* is hereby amended as follows:

"Connection to Boilers. The potable supply to the boiler shall be protected by an air gap or a reduced pressure principle backflow preventor complying with ASSE 1013, CSA CAN/CSA B64.4 or AWWA C511. Where conditioning chemicals are introduced into the system, the potable water connection shall be protected by an air gap or a reduced pressure principle backflow preventor complying with ASSE 1013, CSA CAN/CSA B64.4 or AWWA C511."

(11) *Section 608.16(5), Connections to Lawn Irrigation Systems,* is hereby amended as follows:

"Connections to Lawn Irrigation Systems. The potable water supply to a lawn irrigation system shall be protected against backflow by a reduced pressure principle backflow preventor. Where chemicals are introduced into the system, the potable water supply shall be protected against backflow by a reduced pressure principle backflow preventor."

(12) *Section 703.6, Minimum Size of Building Sewer,* is hereby amended as follows:

"Minimum Size of Building Sewer. The gravity building sewer shall not be less than four (4) inches (76 mm) in size."

(13) *Section 710.3, Underground Drainage Piping,* is hereby amended as follows:

"Underground Drainage Piping. Any portion of the drainage system installed underground or below a basement or cellar shall not be less than two (2) inches (51 mm) in diameter."

(14) *Section 904.1, Roof Extension,* is hereby amended as follows:

"Roof Extension. All open vent pipes that extend through a roof shall be terminated at least six (6) inches above the roof, except where a roof is to be used for any purpose other than weather protection, the vent extension shall run at least 7 feet (214 mm) above the roof."

(Ord. No. 935, art. 4, 10-22-90 ; Ord. No. 1238, Art. 1, 9-21-92; Ord. No. 1671, art. 7, 2-6-95; Ord. No. 2079, art. 7, 11-18-96; Ord. No. 3154, art. 7, 3-17-03; Ord. No. 3546, art. 8, 9-6-05; Ord. No. 4268, art. 8, 9-19-11)

## Sec. 7-54. Sewer and water supply data.

(a) *Public sewer.* Plans for new plumbing systems or alterations to existing plumbing systems shall be accompanied by a diagram showing the relative elevation of the lowest fixture and the top of the public sewer referred to the established datum of the city public works. The plans shall show the size, number and location of all new sewer connections.

(b) *Public water main.* When the installation of a water distribution system or replacement or alteration of a water supply system is contemplated, the plumbing plans shall show the location and sizes of all water lines and branches involved, the fixtures or other devices to be supplied, and the minimum water pressure in the main into which the connection will be made.

(c) *Identical structures.* The same set of plumbing or water supply plans and specifications may be used for two (2) or more buildings or structures when the buildings are identical and are located on adjoining lots under the same ownership, provided the applications for permission to construct or alter are filed simultaneously.

(Ord. No. 935, art. 4, 10-22-90)

## Sec. 7-55. Defective plumbing and drainlaying.

(a) *Condemnation.* When the code official, upon examination of the plumbing and drainage system of any building within the city, finds that either or both of the systems are in such a condition as to permit the emission or discharge of sewer gas into such building, or to cause the cellar or basement of such building to be wet or damp by reason of leakage of water or other liquid from the plumbing or drainage system of an adjoining building or premises, it shall be the inspector's duty to promptly notify the owner in writing of such building or premises on which the defective plumbing or drainage exists, to remove or repair the plumbing or drainage system within fifteen (15) days immediately following the date of mailing of such notice. In the event the necessary repairs have not been made within the fifteen (15) days, and, in the opinion of the code official, an immediate danger to public health exists by reason of the occupation of the building or premises, he shall immediately advise the city manager who is hereby authorized and empowered to order and require the occupants to vacate the same forthwith. He shall cause to be posted at each entrance to such building or premises a notice reading as follows:

"This building is unsafe and its use or occupancy has been prohibited by the City of Cape Girardeau, Missouri,"

and it shall be unlawful for any person to enter such building or structure except for the purpose of making the required repairs.

(b) *Test.* The plumbing of any building which the code official has reason to believe has become defective is subject to such tests as may be provided for in this code.

(Ord. No. 935, art. 4, 10-22-90; Ord. No. 1671, art. 8, 2-6-95)

### Sec. 7-56. Building sewer installation.

The building sewer from the building to the septic tank or to the public main shall be inspected before any part of the sewer pipe is covered.

(Ord. No. 935, art. 4, 10-22-90)

### Sec. 7-57. Regulations governing individual sewage disposal systems for homes and other establishments where public sewage systems are not available.

The required lot sizes where public water is available [are as follows:]

(1) The minimum lot size in which a private disposal system may be installed is fifteen thousand (15,000) square feet.

(2) Required lot size with private water system in which a private disposal system may be installed is twenty thousand (20,000) square feet.

(Ord. No. 935, art. 4, 10-22-90)

### Sec. 7-58. Permits.

(a) *Required.* No owner, lessee or keeper of any structure or premises or any agent thereof where such agent orders plumbing or drainlaying work, shall cause or permit plumbing or drainlaying, except minor repairs, to be done in or upon or about any building or premises until the person proposing to do such work shall have first procured a permit from the inspector authorizing it to be done, nor shall any person commence any plumbing or drainlaying work, except minor repairs, until he shall have obtained a permit from the inspector authorizing such work to be done. The above provisions requiring permits shall apply with equal force to plumbing or drainlaying done in any private structure, lot or premises at the command of the inspector, city manager, or other authorized officer of the board. No structure or premises shall be connected with any sewer, public or private, without a permit.

(b) *To whom issued.* A permit to install plumbing fixtures and drains for any building may be issued to a regularly certified and bonded plumbing contractor, or to a master plumber. A permit to install plumbing fixtures or drains for residential structures not exceeding two (2) stories in height or eight (8) dwelling units per building, may be issued to a regularly certified and bonded journeyman plumber. A permit to install drains only for any building may be issued to a regularly certified and bonded master drainlayer. Each permit must be applied for. Blanket applications will not be received. All work shall be done by or under the supervision of the person in whose name the permit or permits required by this section are issued. Permits must be on the grounds at all times while work is in progress and must be shown to any police officer or other authorized representative of the inspector.

(Ord. No. 935, art. 4, 10-22-90)

### Sec. 7-59. Septic tank bypass.

When a septic tank is to be bypassed and existing plumbing and drainage systems of the building are to be connected to a public sewer, the following method shall be used:

(1) *Inside plumbing investigation.* Inside plumbing investigation must be made to determine if a plumbing and drainage system waste and vent piping conform with this code.

(2) *Backfilling of abandoned septic tank.* The abandoned septic tank must be backfilled with a granular material, such as limestone or gravel. All liquid within the tank must be pumped out before proceeding with granular backfill.

(3) *Elimination of sump pump discharges.* All sump pumps discharging clear water waste shall be disconnected from the sanitary sewer system.

(Ord. No. 935, art. 4, 10-22-90)

### Sec. 7-60. Building sewer connections.

Building sewer connections into manholes are prohibited, except where the sewer is connected in the bottom of the manhole and an invert is provided to the main invert through the manhole.

(Ord. No. 935, art. 4, 10-22-90)

### Secs. 7-61—7-175. Reserved.

---

FOOTNOTE(S):

---

--- (**4**) ---

**Note—** See the editor's footnote to the title of this chapter. (Back)

## ARTICLE IV. MECHANICAL CODE [5]

Sec. 7-176. Short title.

Sec. 7-177. International Mechanical Code/2009—Adopted.

Sec. 7-178. Same—Amendments.

Sec. 7-179. Discontinuance of service by gas company for defective or dangerous piping and appliances.

Secs. 7-180—7-210. Reserved.

### Sec. 7-176. Short title.

This article shall be known as the "Mechanical Code of the City of Cape Girardeau," and may be cited as such.

(Ord. No. 935, art. 6, 10-22-90)

### Sec. 7-177. International Mechanical Code/2009—Adopted.

The city hereby adopts the 2009 edition of the International Mechanical Code, published by the International Code Council, Inc., as amended in section 7-178 of this Code. Three (3) copies of the 2009 edition of the International Mechanical Code are on file in the office of the city clerk and are available for public use, inspection and examination. The 2009 edition of the International Mechanical Code is hereby incorporated by reference into the Code of Ordinances of the city as though fully set out herein.

(Ord. No. 935, art. 6, 10-22-90; Ord. No. 1671, art. 9, 2-6-95; Ord. No. 2079, art. 8, 11-18-96; Ord. No. 3154, art. 8, 3-17-03; Ord. No. 3546, art. 9, 9-6-05; Ord. No. 4268, art. 9, 9-19-11)

### Sec. 7-178. Same—Amendments.

The 2009 International Mechanical Code adopted by this article is hereby modified and amended in the following respects:

(1) *Section 101.1* shall read as follows:

"Title. This code shall be part of the mechanical code of the City of Cape Girardeau hereinafter referred to as the mechanical code or "this code"."

(2) *Section 103.1, General,* is hereby deleted.

(3) *Section 103.2, Appointment,* is hereby amended to read as follows:

"Appointment. The code official shall be appointed by the city manager."

(4) *Section 106.5.2, Fee Schedule,* is hereby amended to read as follows:

"Fee schedule. The fees for all mechanical work shall be as indicated in the following schedule:

City Fee Schedule"

(5) *Section 106.5.3, Fee Refunds,* is hereby deleted.

(6) *Section 108.4, Violation Penalties,* is hereby deleted.

(7) *Section 109.0* is hereby repealed and a new section 109.0 entitled "Means of Appeal" is hereby enacted as follows:

"Means of appeal. Any person shall have the right to appeal a decision of the code official to the board of appeals as set out in section 112.1 of the International Building Code/2009, as amended."

(Ord. No. 935, art. 6, 10-22-90; Ord. No. 1671, art. 10, 2-6-95; Ord. No. 2079, art. 9, 11-18-96; Ord. No. 3154, art. 9, 3-17-03; Ord. No. 3546, art. 10, 9-6-05; Ord. No. 4268, art. 10, 9-19-11)

### Sec. 7-179. Discontinuance of service by gas company for defective or dangerous piping and appliances.

(a) *Discontinuance of service; notice required.* The gas company may discontinue or refuse to supply gas for any gas piping or gas appliance which appears to be defective or leaking, or otherwise considered to endanger life or property; provided it immediately gives notice of discontinuance to the inspector and occupant of the buildings or premises where such gas supply is discontinued or refused.

(b) *Resumption of service.* In all cases where the supplying of gas has been discontinued for safety reasons, the supplying of gas shall not be resumed until authorized by the code official.

(Ord. No. 935, art. 6, 10-22-90)

### Secs. 7-180—7-210. Reserved.

---

FOOTNOTE(S):

---

--- (**5**) ---

**Note—** See the editor's footnote to the title of this chapter. (Back)

## ARTICLE V. ELECTRICAL CODE [6]

DIVISION 1. - GENERALLY

DIVISION 2. - CODE OFFICIAL

---

FOOTNOTE(S):

---

--- (**6**) ---

**Note—** See the editor's footnote to the title of this chapter. (Back)

## *DIVISION 1. GENERALLY*

Sec. 7-211. Short title.

Sec. 7-212. 2008 National Electrical Code—Adopted.

Sec. 7-213. Same—Amendments.

Sec. 7-214. Permit required; application.

Sec. 7-215. Temporary permit; issuance.

Sec. 7-216. Inspection of installations required.

Sec. 7-217. Unlawful to furnish current until certificate of final inspection obtained.

Sec. 7-218. Reserved.

Sec. 7-219. Service connections; general requirements.

### Sec. 7-211. Short title.

This article shall be referred to as "The Electrical Code of Cape Girardeau."

(Ord. No. 935, art. 8, 10-22-90)

### Sec. 7-212. 2008 National Electrical Code—Adopted.

The city hereby adopts the 2008 edition of the National Electrical Code, published by the National Fire Protection Association, except such portions as are hereafter deleted, modified or amended. Three (3) copies of the 2008 edition of the National Electrical Code, published by the National Fire Protection Association, are on file in the office of the city clerk and are available for public use, inspection and examination. The 2008 edition of the National Electrical Code, is hereby incorporated by reference into the Code of Ordinances of the city as though fully set out herein.

(Ord. No. 935, art. 8, 10-22-90; Ord. No. 1671, art. 11, 2-6-95; Ord. No. 2079, art. 10, 11-18-96; Ord. No. 3154, art. 11, 3-17-03; Ord. No. 3546, art. 11, 9-6-05; Ord. No. 4268, art. 11, 9-19-11)

### Sec. 7-213. Same—Amendments.

The 2008 edition of the National Electrical Code adopted by the City of Cape Girardeau is hereby modified and amended in the following respects:

(a) *Section 210.12* Arc-Fault Circuit-Interrupter Protection is hereby repealed in its entirety.

(b) *Section 250.52(A)(1).* Section 250.52(A)(1) Metal Underground Water Pipe is not permitted as a grounding electrode in new construction. In existing construction, Metal Underground Water Pipe shall be discontinued as a grounding electrode upon renovation or upgrade of the electrical system or service, and shall be replaced with additional electrodes, at the discretion of the Electrical Inspector, providing resistance as specified in NEC 250.56.

(c) *Section 250.70(2)* is hereby modified to read:

"Two (2) listed bolted clamps of cast bronze or brass, or plane or malleable iron."

(Ord. No. 4268, art. 11, 9-19-11; Ord. No. 4403, art. 3, 12-17-12)

### Sec. 7-214. Permit required; application.

No alterations or additions shall be made in the existing wiring of any building, nor shall any building be wired for the placing of any electric lights, motors, heating devices, or any apparatus requiring the use of electrical current, nor shall any alterations be made in the wiring in any building after inspection, except minor repair work, such as repairing flush and snap switches, replacing fuses, changing lamp sockets and receptacles, taping bare joints and repairing drop cords, without first securing a permit therefore from the electrical inspector.

(Ord. No. 935, art. 8, 10-22-90; Ord. No. 4268, art. 11, 9-19-11)

### Sec. 7-215. Temporary permit; issuance.

The electrical inspector may, in his discretion, give temporary permission for a reasonable time to supply current in part of any electric installation before such installation has been fully completed.

(Ord. No. 935, art. 8, 10-22-90; Ord. No. 4268, art. 11, 9-19-11)

### Sec. 7-216. Inspection of installations required.

(a) The person installing the wiring of any building shall upon completion notify the electrical inspector, who shall inspect the installation within twenty-four (24) hours. If any part of the wiring is to be concealed from view before or upon completion, no person shall cover or cause to be covered up any such wiring until the electrical inspector has inspected and approved the wiring. In case of violation of this provision, the electrical inspector may order the removal of any such covering or lathing or flooring and he is not required to replace or renew it.

(b) All necessary cutouts, cutout boxes or cabinets, fuses, switches, receptacles and other materials and devices shall be installed and all outlets properly connected before any certificate of final inspection will be issued.

(Ord. No. 935, art. 8, 10-22-90; Ord. No. 4268, art. 11, 9-19-11)

### Sec. 7-217. Unlawful to furnish current until certificate of final inspection obtained.

It shall be unlawful to use or to permit the use of, or to supply current for, electric wiring for light, heat or power in any building or structure in the city until the certificate of final inspection has been issued by the electrical inspector.

(Ord. No. 935, art. 8, 10-22-90; Ord. No. 4268, art. 11, 9-19-11)

DIVISION 1. GENERALLY

## Sec. 7-218. Reserved.

## Sec. 7-219. Service connections; general requirements.

Service connections for buildings in the city shall conform to the following regulations:

(1) Suitable weatherproof meter sockets or enclosures to be approved by the utility company providing service shall be used. It shall be the responsibility of the electrical wireman or contractor to secure this approval before making the installation.

(2) All meter and service entrance locations shall meet the approval of the utility company providing service. It shall be the responsibility of the electrical wireman or contractor to secure this approval before making the installation.

(Ord. No. 935, art. 8, 10-22-90)

## *DIVISION 2. CODE OFFICIAL*

Sec. 7-220. Appointment.

Sec. 7-221. Duty to supervise, control certain electrical installations, alterations, etc.

Sec. 7-222. Right of access to buildings in discharge of official duties.

Sec. 7-223. Authority to turn off, disconnect wires, current in emergencies.

Sec. 7-224. Records of permits, inspections and other official work to be kept.

Secs. 7-225—7-255. Reserved.

### Sec. 7-220. Appointment.

The code official shall be appointed by the city manager and shall have responsibility and authority to enforce the requirements of this article.

(Ord. No. 935, art. 8, 10-22-90)

### Sec. 7-221. Duty to supervise, control certain electrical installations, alterations, etc.

The code official shall have control of the construction, installation, erection, extension, alteration or change of any electrical apparatus, machine, appliance, device, fixture, attachment, wire or wiring on or within any buildings or structures and for special lighting for power or heat in connection therewith, designed to be operated on, from, by or in connection with any electric light, heat or power or other electrical plant, generating, delivering, conducting or requiring for its use or their operation, use, or maintenance, electrical current, energy or power at an electromotive or potential of more than twelve (12) volts.

(Ord. No. 935, art. 8, 10-22-90)

### Sec. 7-222. Right of access to buildings in discharge of official duties.

The code official shall have the right during reasonable hours to enter any building in the discharge of his official duties, or for the purpose of making any inspection or test of the installation of electric wiring, electric devices, or electric material contained therein.

(Ord. No. 935, art. 8, 10-22-90)

### Sec. 7-223. Authority to turn off, disconnect wires, current in emergencies.

The code official shall have the authority to turn off all electrical currents and to cut or disconnect in cases of emergency any wire where such electrical currents are dangerous to life or property or may interfere with the work of the fire department.

(Ord. No. 935, art. 8, 10-22-90)

DIVISION 2. CODE OFFICIAL

### Sec. 7-224. Records of permits, inspections and other official work to be kept.

The code official shall keep complete records of all permits issued and inspections made and other official work performed under the provisions of this article.

(Ord. No. 935, art. 8, 10-22-90)

### Secs. 7-225—7-255. Reserved.

## ARTICLE VI. FIRE CODE [7]

Sec. 7-256. International Fire Prevention Code/2009—Adopted.

Sec. 7-257. Same—Amendments.

Secs. 7-258—7-265. Reserved.

### Sec. 7-256. International Fire Prevention Code/2009—Adopted.

The city hereby adopts the 2009 edition of the International Fire Prevention Code, published by International Code Council, Inc., except such portions as are hereafter deleted, modified or amended. Three (3) copies of the 2009 edition of the International Fire Prevention Code are on file in the office of the city clerk and are available for public use, inspection and examination. The 2009 edition of the International Fire Prevention Code is hereby incorporated by reference into the Code of Ordinances of the city as though fully set out herein.

(Ord. No. 935, art. 10(§ 7-300), 10-22-90; Ord. No. 1671, art. 12, 2-6-95; Ord. No. 2079, art. 11, 11-18-96; Ord. No. 3154, art. 14, 3-17-03; Ord. No. 3546, art. 12, 9-6-05; Ord. No. 4268, art. 12, 9-19-11)

### Sec. 7-257. Same—Amendments.

The 2009 edition of the International Fire Prevention Code adopted by the City of Cape Girardeau is hereby modified and amended in the following respects:

(1) *Section 101.1* shall read as follows:

"Title. These regulations shall be known as the fire code of the City of Cape Girardeau, Missouri, and are herein referred to as the fire code or as "this code"."

(2) *Section 108.2* entitled, *"Limitations on Authority",* is hereby repealed in its entirety. A new section 108.2 entitled "Limitations on Authority" is hereby enacted as follows:

"Limitations on authority. Any person shall have the right to appeal a decision of the code official to the board of appeals. An application for appeal shall be based on a claim that the intent of this code or the rules legally adopted thereunder have been incorrectly interpreted, the provisions of this code do not fully apply, or an equivalent method of protection or safety is proposed. The board shall have no authority to waive requirements of this code."

(3) *Section 307.2.2* is hereby modified, changed and amended by adding the following:

". . . or as otherwise provided by Chapter 3 "Air Pollution" in the Code of Ordinances of the City of Cape Girardeau."

(4) *Section 307.3* is hereby modified, changed and amended by adding the following:

"...or as otherwise provided by Chapter 3 "Air Pollution" in the Code of Ordinances of the City of Cape Girardeau."

(5) Amend *Section 505.1* to read as per Section 24.1(a) of the Code of the Ordinances of the City of Cape Girardeau.

(6) *Section 3301.1.3* is hereby modified, changed and amended to read as follows:

"General. It shall be a violation of this code to store, offer for sale, expose for sale, sell at retail, or use or explode any fireworks, except as provided in Chapter 11, Articles I and II, sections 11-48 through 11-52 of the Code of Ordinances for the City of Cape Girardeau, and except as provided in the rules and regulations issued for the granting of permits for supervised public displays of fireworks by the City of Cape Girardeau, fair associations, amusement parks and other organizations. Every display shall be handled by an approved licensed competent operator. The fireworks shall be arranged, located, discharged or fired in a manner that, in the opinion of the code official, will not be hazard to property or endanger any person."

(7) A new *Section 3401.1.1* shall be added which shall read as follows:

"Section 3401.1.1. Bulk, Processing and Industrial Plants. Bulk, processing or industrial plants, refineries or other plants and distilleries and all buildings, tanks and equipment used for the storage, processing, distillation, refining or blending of flammable or combustible liquids shall be located, constructed and used in accordance with the building code and NFPA 30 listed in Appendix A and any other applicable law or ordinance of the City of Cape Girardeau."

(8) *Section 3404.1* is hereby modified, changed and amended to read as follows:

"General. Above ground storage tanks for the storage of combustible or flammable liquids shall be prohibited except as specifically provided for in this code."

(Ord. No. 935, art. 10(§ 7-301), 10-22-90; Ord. No. 1671, art. 13, 2-6-95; Ord. No. 2079, art. 12, 11-18-96; Ord. No. 3154, art. 15, 3-17-03; Ord. No. 3546, art. 13, 9-6-05; Ord. No. 4268, art. 13, 9-19-11; Ord. No. 4403, art. 4, 12-17-12)

**Secs. 7-258—7-265. Reserved.**

---

FOOTNOTE(S):

---

--- (**7**) ---

**Editor's note—** Ord. No. 935, adopted Oct. 22, 1990, amended the 1967 Code by adding provisions designated as art. VI, §§ 7-300 and 7-301, therein. The editor has included the provisions in this Code as art. VI, §§ 7-256 and 7-257. See also the editor's footnotes to the title of this chapter and to ch. 11, art. II, §§ 11-27—11-30. (Back)

**Cross reference—** Fire prevention and protection, ch. 11. (Back)

## ARTICLE VII. DANGEROUS BUILDINGS [8]

Sec. 7-266. Determination.

Sec. 7-267. Declared nuisances.

Sec. 7-268. Standards for repair, vacation or demolition.

Sec. 7-269. Duty to report.

Sec. 7-270. Designation of building official, building commission and building supervisor.

Sec. 7-271. Duties of building official.

Sec. 7-272. Duties of building supervisor.

Sec. 7-273. Emergency cases.

Sec. 7-274. Right to appeal.

Sec. 7-275. Notice.

Sec. 7-276. Duties of the city attorney.

Sec. 7-277. Violations; penalty for disregarding notices or orders.

Sec. 7-278. Insurance proceeds.

Sec. 7-279. Transfer of ownership.

Sec. 7-280. Trespass upon premises of buildings posted as dangerous buildings.

Secs. 7-281—7-300. Reserved.

### Sec. 7-266. Determination.

All buildings or structures which have any or all of the following defects shall be deemed "dangerous buildings" and shall constitute conditions which are detrimental to the health, safety and welfare of the residents of the city.

(1) Those whose interior walls or other vertical structural members list, lean or buckle to such an extent that a plumb line passing through the center of gravity falls outside of the middle third of its base.

(2) Those which, exclusive of the foundation, show a total of thirty-three (33) percent or more damage or deterioration of the supporting member or members so as to affect the function of such member or members, or fifty (50) percent of damage or deterioration of the nonsupporting enclosing or outside walls or covering so as to affect the function of such walls or covering.

(3) Those which have improperly distributed loads upon the floors or roofs or in which the same are overloaded, or which have insufficient strength to be reasonably safe for the purpose being used.

(4) Those which have been damaged by fire, wind or other causes so as to have become dangerous to life, safety, or the general health and welfare of the occupants or the people of the city.

(5) Any building, shed, fence or other manmade structure, which because of faulty construction, age, lack of proper repair or any cause, is especially liable to fire and constitutes or creates a fire hazard.

(6) Those which have become or are so dilapidated, decayed, unsafe, insanitary or which so utterly fail to provide the amenities essential to decent living that they are unfit for human habitation, or are likely to cause sickness or disease, so as to work injury to the health, safety or general welfare of those living there or to the citizens of the city.

(7) Those having light, air, and sanitation facilities which are inadequate to protect the health, safety, or general welfare of human beings who live or may live therein.

(8) Those having inadequate facilities for egress in case of fire or panic or those having insufficient stairways, elevators, fire escapes, or other means of access within such building.

(9) Those which have parts thereof which are so attached that they may fall and injure members of the public or property.

(10) Any building, shed, fence or other manmade structure which because of its condition or because of its lack of doors or windows is available to and frequented by malefactors or disorderly persons who are not lawful occupants of such structure.

(11) Those which because of their condition are unsafe, insanitary, or dangerous to the health, safety or general welfare of the people of this city.

(12) Those buildings existing in violation of any provision of the building code of this city, or any provision of the fire prevention code, or other ordinances of this city.

(Code 1967, § 9A-1)

## Sec. 7-267. Declared nuisances.

All dangerous buildings within the terms of section 7-266 are hereby declared to be detrimental to the health, safety or welfare of the residents of the city and are declared to be public nuisances, and shall be repaired, vacated, or demolished as provided in this article.

(Code 1967, § 9A-2)

## Sec. 7-268. Standards for repair, vacation or demolition.

The following standards shall be followed in substance by the building official, the building supervisor and the building commission in ordering repair, vacation, or demolition:

(1) If the "dangerous building" can reasonably be repaired so that it will no longer exist in violation of the terms of this article it shall be ordered repaired.

(2) If the "dangerous building" is in such condition as to make it dangerous to the health, safety, or general welfare of its occupants it shall be ordered to be vacated.

(3) In any case where a "dangerous building" is fifty (50) percent damaged or decayed, or deteriorated from its original value or structure, it shall be demolished, and in all cases where a building cannot be repaired or the parties who have an interest in the building will not repair the building so that it will no longer exist in violation of the terms of this article it may be demolished. In all cases where a "dangerous building" is a fire hazard existing or erected in violation of the terms of this article or any ordinance of the city or statutes of the state, it shall be demolished.

(4) If the "dangerous building" is in such a condition that it can reasonably be repaired and the parties who have an interest refuse to make such repairs after being ordered by the building supervisor to make the necessary repairs, the city attorney shall file, at the request of the building commission, a suit in circuit court under Act Number 230, 75th General Assembly, 1969 Regular Session, to cause such repairs to be made.

(Code 1967, § 9A-3)

**State law reference—** Demolition or repair of structures constituting a public nuisance, RSMo, § 67.400 et seq.

### Sec. 7-269. Duty to report.

It shall be the duty of all city employees to make a report, in writing to the building official of all buildings which they believe are, may be, or are suspected to be "dangerous buildings" within the terms of this article. Such reports are to be made within a reasonable time after the discovery of such buildings or structures.

(Code 1967, § 9A-4)

### Sec. 7-270. Designation of building official, building commission and building supervisor.

The city manager shall designate a building official and a building supervisor, who shall have such duties as provided for in this article. The building commission shall be made up of the city council who shall act through the building supervisor. The building commission and the building supervisor shall perform the duties of the building commissioner as designated in RSMo § 67.410.

(Code 1967, § 9A-5)

### Sec. 7-271. Duties of building official.

The building official shall:

(1) Inspect or cause to be inspected all public buildings, schools, halls, churches, theaters, hotels, tenements, commercial, manufacturing, or loft buildings for the purpose of determining whether any conditions exist which render such places "dangerous buildings" within the terms of this article.

(2) Inspect any building, wall or structure about which complaints are filed by any person to the effect that a building, wall or structure is or may be existing in violation of this article.

(3) Inspect any building, wall or structure reported (as hereinafter provided for) by the fire department, police department, or other city official of this city as probably existing in violation of the terms of this article.

(4) Inspect buildings in this city to determine whether they are "dangerous buildings" within the terms of this article.

(5) The building official may direct that a building, determined by him to be a nuisance under section 7-267, be marked or posted with a written notice reading substantially as follows:

> This building has been found to be a dangerous building by the building official. This notice is to remain on this building until it is repaired, vacated or demolished in accordance

with the notice provided pursuant to section 7-271. It is unlawful to remove this notice until such notice is complied with.

Provided, however, that the order of the building supervisor and the posting of said notice, shall not be construed to deprive all persons entitled thereto by this section to the notice and hearing prescribed herein.

(6) Notify the owner, occupant, lessee, mortgagee, agent and all other persons having an interest in such building as shown by the land records of the recorder of deeds of the county of any building found by him to be a "dangerous building" within the standards set forth in this article, by declaring such to be a public nuisance so that:

a. The owner must vacate, repair, or demolish such building in accordance with the terms of the notice and this article;

b. The occupant or lessee must vacate such building or may have it repaired in accordance with the notice and remain in possession.

(7) Set forth in the notice provided for in section 7-271(6), a description of the building or structure deemed unsafe, a statement of the particulars which make the building or structure a "dangerous building" and an order requiring the same to be put in such condition as to comply with the terms of this article within such length of time as is reasonable, not to exceed thirty (30) days, unless in the judgment of the building official it is determined to be necessary to extend such time to do or have the work done as required by the notice. Additional extensions of time may be granted in writing by the building official where it appears that the interested party is making reasonable progress in complying with the order of the building official.

(8) Report to the building supervisor any noncompliance with the "notice" provided for in section 7-271(6) and (7) of this section or failure to proceed with the work without unnecessary delay.

(9) When requested, appear at all hearings conducted by the building supervisor, and testify as to the condition of "dangerous buildings."

(Code 1967, § 9A-6; Ord. No. 1097, art. 1, 10-21-91; Ord. No. 4277, art. 1, 11-21-11)

## Sec. 7-272. Duties of building supervisor.

[The building supervisor shall:]

(1) Supervise the building official.

(2) Upon receipt of a report of the building official, as provided for in section 7-271, give written notice to the owner, occupant, mortgagee, lessee, agent, and all other persons having an interest in such building, as shown by the land records of the recorder of deeds of the county, to appear before him on the date specified in the notice, to show cause why the building or structure reported to be a "dangerous building" should not be repaired, vacated, or demolished in accordance with the statement of particulars set forth in the building official's notice. The building supervisor shall call and have a full and adequate hearing upon the matter giving the affected parties at least twenty-one (21) days' notice of the hearing.

(3) Hold a hearing and hear such testimony relative to the "dangerous building" from the building official or other city officials, or the owner, occupant, mortgagee, lessee, or any other person having an interest in such building as shown by the land records of the recorder of deeds of the county. Any party may be represented by counsel and all parties shall have an opportunity to be heard.

(4) Make written findings of fact based upon competent and substantial evidence from the testimony offered pursuant to section 7-272(3) as to whether or not the building in question is a "dangerous building" within the terms of this article.

(5) Issue an order based upon specific findings of fact which show the building or structure to be a nuisance and detrimental to the health, safety, or welfare of the residents of the city, all made pursuant to section 7-272(3), commanding the owner to repair, vacate, or demolish and giving the occupant, mortgagee, lessee, agent and all other persons having an interest in such building, as shown by the land records of the recorder of deeds of the county, the opportunity to repair or demolish any building found to be a "dangerous building" within the terms of this article. All occupants of any building found to be a "dangerous building" may be ordered to vacate the building.

(6) If the owner, occupant, mortgagee, agent, lessee or any person having an interest in such building fails to comply with the order within thirty (30) days, the building supervisor may cause such building or structure to be repaired, vacated or demolished as the facts may warrant; and the building supervisor may certify the cost of the work borne by the city for such repair, vacation or demolition to the city clerk or finance director who shall, at their option, cause the certified cost to be included in a "special tax bill," which shall be a lien against the real property affected, or shall add the cost to the annual real estate tax bill for the property. The certified cost added to the annual real estate tax bill shall be collected by the official collecting taxes in the same manner and procedure for collecting real estate taxes. If the certified cost is not paid, the tax bill shall be considered delinquent, and the collection of the delinquent bill shall be governed by the laws governing delinquent and back taxes. The special tax bills for the above work may be collected and paid as provided for the collection of other special tax bills for the repairing of sidewalks or grading or paving of streets. In either case, the tax bill from the date of its issuance shall be deemed a personal debt against the owner(s) until paid, and the city may maintain a separate city action to recover these costs.

(7) Report to the city attorney the names of all persons not complying with the order provided for in section 7-272

(8) Supervise the building official in his work under the provisions of this article.

(Code 1967, § 9A-7; Ord. No. 1097, art. 2, 10-21-91; Ord. No. 2217, art. 1, 8-18-97; Ord. No. 4277, art. 2, 11-21-11)

## Sec. 7-273. Emergency cases.

In cases where it reasonably appears that there is immediate danger to the life, safety, or welfare of any person, due to the existence of a "dangerous building," the building official shall report such facts to the building supervisor and the building supervisor may cause the immediate repair, vacation, or demolition of such "dangerous building." The costs of such emergency repair, vacation or demolition of such "dangerous building" shall be collected in the same manner as provided in section 7-272.

(Code 1967, § 9A-8)

## Sec. 7-274. Right to appeal.

(a) Any interested person who is an owner, occupant, lessee, mortgagee, agent, and all other persons having an interest in the building or structure, as shown by the land records of the recorder of deeds of the county, who is aggrieved by the decision, may appeal from the order of the building supervisor to the building commission. The city council shall act as the building commission and shall review the decision of the building supervisor at a public hearing. The appeal must be made in writing within ten

(10) days from the decision of the building supervisor, by a person who has an interest in the building, as shown by the land records of the recorder of deeds of the county, and who is aggrieved by the decision. The building commission shall review the decision of the building supervisor and may reverse his order, let his order stand, or may enter a new order in accordance with the facts as determined by them at a public hearing.

(b) For purposes of appeal the decision of the building commission shall be a final appealable order from which the interested parties described in RSMo § 67.410(3) may appeal to the circuit court as established in RSMo Chapter 536.

(c) Any interested party or person who is an owner, occupant, lessee, mortgagee or agent, and all other persons having an interest in the building or structure, as shown by the land records of the recorder of deeds of the county may appeal from the determination of the building commission, in accordance with RSMo Chapter 536.

(Code 1967, § 9A-9)

### Sec. 7-275. Notice.

Notice required by section 7-271 shall be in writing and shall either be personally served or mailed by certified mail, return receipt requested, upon the owner, occupant, lessee, mortgagee, agent and all other persons having an interest in the building or structure as shown by the land records of the recorder of deeds of the county. When service cannot be had by either of the above two (2) methods then service may be made by publication. Notice by publication shall be made at least one (1) time by inserting in a local newspaper of general circulation published in the county, a copy of the notice required by section 7-271, with the names of the parties who have an interest in the land.

(Code 1967, § 9A-10; Ord. No. 4277, art. 3, 11-21-11)

### Sec. 7-276. Duties of the city attorney.

The city attorney shall:

(1) Prosecute all persons failing to comply with the terms of the orders provided for herein in section 7-272

(2) Appear, when requested, at all hearings before the building supervisor in regard to "dangerous buildings."

(3) Bring suit to collect all municipal liens, assessments, or costs incurred by the building supervisor in repairing or causing to be vacated or demolished "dangerous buildings."

(4) Take such other legal action as is necessary to carry out the terms and provisions of this article.

(Code 1967, § 9A-11)

**Cross reference—** Law department, § 2-50.

### Sec. 7-277. Violations; penalty for disregarding notices or orders.

(a) Any person who fails to comply with any order to repair, vacate, or demolish a "dangerous building" within a reasonable time or who fails to proceed continuously without unnecessary delay, shall be punishable by a fine of not less than fifty dollars ($50.00) per day nor in excess of five hundred dollars ($500.00) per day for each day that the building or structure is in violation of this article.

(b) The occupant or lessee in possession who fails to comply with any notice or order to vacate such building in accordance with any notice given as provided for in this article shall be fined a sum not less than fifty dollars ($50.00) per day nor in excess of five hundred dollars ($500.00) per day for each day the occupant or lessee fails to comply with the notice or order.

(Code 1967, § 9A-12; Ord. No. 4277, art. 4, 11-21-11)

## Sec. 7-278. Insurance proceeds.

(1) Every special assessment and a special tax bill issued against property pursuant to the provisions of this article shall be deemed a personal debt against the property owner or owners.

(2) The insurer shall withhold from the covered claim payment twenty-five (25) percent of the covered claim payment, and shall pay that amount to the city to deposit into an interest bearing account. Any named mortgagee on the insurance policy shall maintain priority over any obligation under this section.

(3) The city shall release the proceeds and any interest which has accrued on such proceeds received under section 7-278(2) to the insured or as the terms of the policy and endorsements thereto provide within thirty (30) days after receipt of such insurance moneys, unless the city has instituted legal proceedings under the provisions of this article. If the city has proceeded under the provisions of this article, all moneys in excess of that necessary to comply with the provisions of this article for the removal of the building or structure, less salvage value, shall be paid to the insured or as the terms of the policy and endorsements thereto provide.

(4) The city may certify that, in lieu of payment of all or part of the covered claim payment under this section, it has obtained satisfactory proof that the insured has or will remove debris and repair, rebuild or otherwise make the premises safe and secure. In this event, the city shall issue a certificate within thirty (30) days after receipt of proof to permit covered claim payment to the insured without deduction. It shall be the obligation of the insured or other person making claim to provide the insurance company with the written certificate provided for in this subsection.

(5) No provision of this section shall be construed to make the city a party of any insurance contract.

(Code 1967, § 9A-13; Ord. No. 4277, art. 5, 11-21-11)

## Sec. 7-279. Transfer of ownership.

(a) It shall be unlawful for the owner of any dwelling unit or structure who has received a compliance order or upon whom a notice of violation has been served to sell, transfer, mortgage, lease or otherwise dispose of to another until the provisions of the compliance order or notice have been complied with, or until such owner shall first furnish the grantee, transferee, mortgagee or lessee a true copy of any compliance order or notice of violation issued by the code official and shall furnish to the code official a signed and notarized statement from the grantee, transferee, mortgagee or lessee, acknowledging the receipt of such compliance order or notice of violation and fully accepting the responsibility without condition for making the corrections or repairs required by such compliance order or notice of violation.

(b) Any person who is convicted of violation of this section relating to transfer of ownership shall be punished by a fine not exceeding five hundred dollars ($500.00), or by imprisonment not exceeding three (3) months, or by both such fine and imprisonment.

(Ord. No. 1254, Art. 1, 10-5-92)

ARTICLE VII. DANGEROUS BUILDINGS

### Sec. 7-280. Trespass upon premises of buildings posted as dangerous buildings.

(a) Upon posting any building, structure or premises as a "dangerous building" pursuant to section 7-271(9), it shall be unlawful for any person to enter or remain in or upon such building, structure, or premises until such time as same has been repaired, vacated or demolished pursuant to this Code of Ordinances, and the posted notice removed by the building official. This section shall not apply to the owner, or agents of the owner directly employed in securing, repairing, vacating, demolishing, or otherwise abating the conditions of the dangerous building, structure, or premises.

(b) Violation of this section shall be punishable by a fine not exceeding five hundred dollars ($500.00), or by imprisonment not exceeding ninety (90) days, or by both such fine and imprisonment.

(Ord. No. 2743, art. 1, 6-19-00)

### Secs. 7-281—7-300. Reserved.

---

FOOTNOTE(S):

---

--- (**8**) ---

**Editor's note—** Article VI was renumbered as art. VII, to allow for the inclusion of art. VI, added by Ord. No. 935. The section numbers within the article were not affected. See the editor's footnote to the title of this chapter. (Back)

**State Law reference—** Nuisance buildings, RSMo, § 67.400 et seq. (Back)

## ARTICLE VIII. INTERNATIONAL PROPERTY MAINTENANCE CODE 2009 [9]

Sec. 7-301. Title.

Sec. 7-302. International Property Maintenance Code/2009—Adopted.

Sec. 7-303. Same—Amendments.

Secs. 7-304—7-359. Reserved.

### Sec. 7-301. Title.

This article shall be known and may be cited as the "International Property Maintenance Code 2009."

(Ord. No. 3546, art. 14, 9-6-05; Ord. No. 4268, art. 14, 9-19-11)

### Sec. 7-302. International Property Maintenance Code/2009—Adopted.

The city hereby adopts the 2009 edition of the International Property Maintenance Code, published by the International Code Council, Inc., as amended in section 7-365 of this Code. Three (3) copies of the 2009 edition of the International Property Maintenance Code are on file in the office of the city clerk and are available for public use, inspection and examination. The 2009 edition of the International Property Maintenance Code is hereby incorporated by reference into the Code of Ordinances of the city as though fully set out herein.

(Ord. No. 3546, art. 14, 9-6-05; Ord. No. 4268, art. 14, 9-19-11)

### Sec. 7-303. Same—Amendments.

(a) Section 101.1 is hereby modified, changed and amended to read as follows:

"Title. These regulations shall be known as the Property Maintenance Code of the City of Cape Girardeau, Missouri, hereinafter referred to as "this code"."

(b) *Section 103.2* is hereby modified, changed and amended to read as follows:

"Appointment. The code official shall be appointed by the city manager."

(c) *Section 103.5, Fees,* is hereby amended to read as follows:

"Fees. The fees for activities and services performed by the department in carrying out its responsibilities under this code shall be as indicated in the following schedule:

"City Fee Schedule"

(d) *Section 106.4, Violation Penalties,* is hereby modified, changed and amended to read as follows:

"Violation penalties. Any person who shall violate a prevision of this code, or fail to comply therewith, or with any of the requirements thereof, shall upon conviction thereof, be subject to a fine of not less than fifty dollars ($50.00) nor more than five hundred dollars ($500.00) per day for each day the violation exists or continues, or imprisonment for a term not to exceed ninety (90) days, or both, at the discretion of the court."

(e) *Section 107.1, Notice to Person Responsible,* is hereby modified, changed and amended to read as follows:

"Notice to person responsible". Whenever the code official determines that there has been a violation of this code or has grounds to believe that a violation has occurred, notice shall be given in the manner prescribed in Section 107.2 and 107.3 to the person responsible for the violation as specified in this code."

(f) *Section 107.2(6), include a statement of the right to file a lien,* is hereby repealed in its entirety.

(g) *Section 110, Demolition,* is hereby repealed in its entirety.

(h) *Section 111.2, Membership of Board,* is hereby modified, changed and amended to read as follows:

"Membership of Board. The board of appeals shall consist of seven (7) members as established in the International Building Code, Section B101.2, as amended."

(i) *Section 111.2.1, Alternate members,* is hereby modified, changed and amended to read as follows:

"Alternate members. The city council may appoint two (2) alternate members as established in the International Building Code, Section B-101.2.1, as amended."

(j) *Section 111.4, Open hearing,* is hereby modified, changed and amended to read as follows:

"Open hearing. All hearings before the board shall be opened to the public. The appellant, the appellant's representative, the code official and any person whose interests are affected shall be given an opportunity to be heard."

(k) *Section 111.6, Board decision,* is hereby modified, changed and amended to read as follows:

"Board decision. The board shall modify or reverse the decision of the code official by a concurring vote given by the majority of the members present at a meeting where a quorum exists."

(l) *Section 111.7, Court review,* is hereby deleted.

(m) *Section 302.4, Weeds,* is hereby repealed in its entirety.

(n) *Section 304.2, Protective treatment,* is hereby modified, changed and amended to read as follows:

"Protective treatment. All exterior surfaces, including but not limited to, doors, door and window frames, cornices, porches, trim, balconies, decks and fences shall be maintained in good condition. Exterior wood surfaces, other than decay-resistant woods, shall be protected from the elements and decay. All siding and masonry joints as well as those between the building envelope and the perimeter of windows, doors, and skylights shall be maintained weather resistant and water tight."

(o) *Section [F]304.3, Premises identification,* is hereby modified, changed and amended to read as follows:

"Premises identification. Buildings shall have approved address numbers complying with the provisions of Section 25-904 of the City Code."

(p) *Section 304.14 Insect screens,* is hereby modified, changed, and amended to read as follows:

"Insect screens. Every door, window and other outside opening required for ventilation of habitable rooms, food preparation areas, food service areas or any areas where products to be included or utilized in food for human consumption are processed, manufactured, packaged or stored, shall be supplied with approved tightly fitting screens of not less than 16 mesh per inch and every swinging door shall have a self-closing device in good working condition."

ARTICLE VIII. INTERNATIONAL PROPERTY MAINTENANCE CODE 2009

(Ord. No. 3546, art. 14, 9-6-05; Ord. No. 4268, art. 14, 9-19-11; Ord. No. 4278, art. 3, 11-21-11)

**Secs. 7-304—7-359. Reserved.**

---

FOOTNOTE(S):

---

--- (**9**) ---

**Editor's note—** Ord. No. 3546, art. 14, adopted Sept. 6, 2005, repealed the former Art. VIII., §§ 7-301—7-339, and enacted a new Art. VIII as set out herein. The former Art. VIII pertained to similar subject matter and was derived from Ord. No. 1637, art. 1, adopted Nov. 7, 1994; Ord. No. 1637, art. 1, adopted Nov. 7, 1994; Ord. No. 1662, art. 1, adopted Dec. 19, 1994; Ord. No. 1981, §§ 1—3, adopted June 17, 1996; Ord. No. 2188, art. 1, adopted July 7, 1997; Ord. No. 2703, arts. 1, 2, adopted April 3, 2000; Ord. No. 2806, art. 1, adopted Oct. 23, 2000; Ord. No. 2966, art. 1, adopted Feb. 4, 2002; and Ord. No. 3275, art. 1, Feb. 2, 2004. (Back)

Subsequently, art. 14 of Ord. No. 4268, adopted Sept. 19, 2011, amended the title of art. VIII, Property Maintenance Code 2003, to read as herein set out. (Back)

## ARTICLE IX. 2009 INTERNATIONAL RESIDENTIAL CODE FOR ONE AND TWO FAMILY DWELLINGS [10]

Sec. 7-360. Title.

Sec. 7-361. International Residential Code for One and Two Family Dwellings/2009—Adopted.

Sec. 7-362. Same—Amendments.

### Sec. 7-360. Title.

This article shall be known and may be cited as the "International Residential Code for One and Two Family Dwellings Code 2009."

(Ord. No. 2079, art. 13, 11-18-96; Ord. No. 3546, art. 15, 9-6-05; Ord. No. 4268, art. 15, 9-19-11)

### Sec. 7-361. International Residential Code for One and Two Family Dwellings/2009—Adopted.

The city hereby adopts the 2009 edition of the International Residential Code for One and Two Family Dwellings, published by the International Code Council, Inc., as amended in section 7-362 of this Code. Three (3) copies of the 2009 edition of the International Residential Code for One and Two Family Dwellings are on file in the office of the city clerk and are available for public use, inspection and examination. The 2009 edition of the International Residential Code for One and Two Family Dwellings is hereby incorporated by reference into the Code of Ordinances of the city as though fully set out herein.

(Ord. No. 2079, art. 13, 11-18-96; Ord. No. 3154, art. 16, 3-17-03; Ord. No. 3546, art. 16, 9-6-05; Ord. No. 4268, art. 16, 9-19-11)

### Sec. 7-362. Same—Amendments.

The International Residential Code for One and Two Family Dwellings/2009 adopted by this article is hereby modified and amended in the following respects:

(1) *Section R103.1, Creation of Enforcement Agency,* is hereby modified, changed and amended as follows:

"The Department of Inspection Services is hereby created and the official in charge thereof shall be known as the code official."

(2) *Section R105.2.2, Building,* is hereby modified, changed and amended to read as follows:

"One-story detached accessory structures, provided the floor area does not exceed 150 square feet."

(3) *Section R105.2(2), Work exempt from permits,* "Fences not over 6 feet (1829 mm) high" is hereby deleted.

(4) *Section R105.2(3), Work exempt from permits,* "Retaining walls that are not over 4 feet (1219 mm) in height measured from the bottom of the footing to the top of the wall, unless supporting a surcharge" is hereby deleted.

(5) *Section R105.2(5), Work exempt from permits,* "Sidewalks and driveways," is hereby deleted.

(6) *Table R301.2(1), Climatic and Geographic Design Criteria,* is hereby modified, changed, and amended as follows:

Ground Snow load: 15 psf

Wind Design Speed: 90 mph

Topographic effects: No

Seismic Design Category: D1

Subject to Damage from Weathering: Severe

Subject to Damage from Frost line depth: 18"

Subject to Damage from Termite: Moderate to Heavy

Winter Design Temperature: 10°F

Ice Barrier Underlayment Required: No

Flood Hazards: Refer to Chapter 12 of this Ordinance

Air Freezing Index: 1500

Mean Annual Temp: 57.4°F

(7) *Section R310.1.5, Emergency Escape and Rescue Required;* sleeping room definition is hereby added to read as follows:

"For the purposes of this Section, "Sleeping Room" is defined to mean any room in the dwelling that is greater than 70 square feet and has a built in closet space and typically could [be] used as a bedroom. This does not include rooms used for cooking, eating, family living or gathering and excludes bathrooms, toilet rooms, halls, storage, utility and workshop space and all unconditioned space."

(8) *Table G2413.4(3), Semi Rigid Copper Tubing,* is hereby deleted.

(9) *Table G2413.4(4), Semi Rigid Copper Tubing,* is hereby deleted.

(10) *Section G2414.4(15), Semi Rigid Copper Tubing,* Seamless copper is hereby deleted.

(11) *Section G2414.5(403.5), Metallic tubing.* Aluminum alloy or steel tubing shall be permitted to be used with gases not corrosive to such material.

(12) *Section G2414.5.2(403.5.2), Copper Tubing,* is hereby deleted.

(13) *Section G2414.10.4(403.10.4), Metallic Fittings:* Delete No. 2, "fittings used with copper or brass pipe shall be copper, brass or bronze."

(14) *Section G2415.3(404.3), Piping in Concealed Locations:* Delete exception No. 1 "Tubing joined by brazing."

(15) *Section G2417.4.1(406.4.1), Test pressure,* is hereby modified, changed and amended to read as follows:

"A low pressure air gauge may be substituted upon approval of the code official, in which case a pressure of twenty (20) pounds, shall be sustained by the piping for twenty (20) minutes."

(16) *Section G2417.4.2(406.4.2), Test duration,* is hereby modified, changed and amended to read as follows:

"The test duration shall be not less than 20 minutes."

(17) *Section P2603.6, Freezing,* is hereby modified, changed and amended to read as follows:

"Water service piping shall be installed below recorded frost penetration but not less than twenty-four (24) inches below grade. Building sewer lines shall be a minimum of thirty-six (36) inches below grade if of PVC or clay material and a minimum of six (6) inches below grade if of cast iron, ductile iron or concrete encased material."

(18) *Section P2603.6.1, Sewer depth,* is hereby modified, changed and amended to read as follows:

"Building sewers that connect to private sewage disposal systems shall be a minimum of 36 inches below finished grade at the point of septic tank connection. Building sewers shall be a minimum of 36" below grade."

(19) *Section P2902.5.1, Connections to boilers,* is hereby modified, changed and amended to read as follows:

"The potable supply to the boiler shall be protected by an air gap or a reduced pressure principle backflow preventor complying with ASSE 1012, CSA CAN/CSA B64.3 or AWWA C511. Where conditioning chemicals are introduced into the system, the potable water connection shall be protected by an air gap or a reduced pressure principle backflow preventor complying with ASSE 1012, CSA CAN/CSA B64.3 or AWWA C511."

(20) *Section P2902.5.3, Lawn irrigation systems,* is hereby modified, changed and amended to read as follows:

"The potable supply to a lawn irrigation system shall be protected against backflow by a reduced pressure principle backflow preventor. Where chemicals are introduced into the system, the potable water supply shall be protected against backflow by a reduced pressure principle backflow preventor."

(21) *Section P2904, Dwelling Unit Fire Sprinkler Systems* are not required.

(22) *Section P3005.4, Drain pipe sizing,* No. 5, is hereby modified, changed and amended, to read as follows:

"No building sewer shall be less than four (4) inches in diameter."

(23) *Section P3005.4.1, Branch and stack sizing,* is hereby modified, changed and amended to read as follows:

"Branches and stacks shall be sized according to Table P3005.4.1. Below grade drain pipes shall not be less than two (2) inches (51 mm) in diameter."

(24) *Section E3401.1, Applicability,* is hereby modified, changed and amended to read as follows:

"Applicability. The provisions of Chapters 33 through 42 shall establish the general scope of the electrical system and equipment requirements of this code. Chapters 33 through 42 cover those wiring methods and materials most commonly encountered in the construction of one and two family dwellings and structures regulated by this code. Other wiring methods, materials and subject matter covered in the 2008 National Electrical Code (NFPA 70-2008) are also allowed by the code."

(25) *Section E3401.2, Scope,* is hereby modified, changed and amended to read as follows:

"Scope. Electrical systems, equipment or components not specifically covered in these chapters shall comply with the applicable provisions of the 2008 National Electrical Code (NFPA 70-2008)."

(26) *Section E3902.11, Arc-fault circuit-interrupter protection,* is hereby repealed in its entirety.

(27) *Seismic Design.* Pursuant to Section 319.203, RSMO, no provision of the International Code for One and Two Family Dwellings requiring seismic design and construction provisions shall apply to any single-family or duplex residence.

(Ord. No. 2079, art. 13, 11-18-96; Ord. No. 2104, art. 2, 12-16-96; Ord. No. 3154, art. 17, 3-17-03; Ord. No. 3546, art. 17, 9-6-05; Ord. No. 4268, art. 17, 9-19-11; Ord. No. 4403, arts. 5—12, 12-17-12)

---

FOOTNOTE(S):

---

--- (**10**) ---

**Editor's note—** Article 5 of Ord. No. 4403, adopted Dec. 17, 2012, modified and amended Art. IX, CABO One and Two Family Dwellings Code, title to read as herein set out. (Back)

## ARTICLE X. INTERNATIONAL FUEL GAS CODE 2009

Sec. 7-363. Title.

Sec. 7-364. International Fuel Gas Code/2009—Adopted.

Sec. 7-365. Same—Amendments.

### Sec. 7-363. Title.

This article shall be known and may be cited as the "International Fuel Gas Code 2009."

(Ord. No. 3154, art. 10, 3-17-03; Ord. No. 3546, art. 18, 9-6-05; Ord. No. 4268, art. 18, 9-19-11)

### Sec. 7-364. International Fuel Gas Code/2009—Adopted.

The city hereby adopts the 2009 edition of the International Fuel Gas Code, published by the International Code Council, Inc., as amended in section 7-365 of this Code. Three (3) copies of the 2009 edition of the International Fuel Gas Code are on file in the office of the city clerk and are available for public use, inspection and examination. The 2009 edition of the International Fuel Gas Code is hereby incorporated by reference into the Code of Ordinances of the city as though fully set out herein.

(Ord. No. 3154, art. 10, 3-17-03; Ord. No. 3546, art. 18, 9-6-05; Ord. No. 4268, art. 18, 9-19-11)

### Sec. 7-365. Same—Amendments.

(a) *Section 101.1* is hereby amended to read as follows:

"Title. This code shall be part of the Fuel Gas Code of the City of Cape Girardeau hereinafter referred to as the Fuel Gas Code or "this code"."

(b) *Section 103.1, General,* is hereby deleted.

(c) *Section 103.2* is hereby amended to read as follows:

"Appointment. The code official shall be appointed by the City Manager."

(d) *Section 106.6.2, Fee schedule,* is hereby amended to read as follows:

"Fee schedule. The fees for work shall be as indicated in the following schedule:

City Fee Schedule"

(e) *Section 108.4, Violation Penalties,* is hereby deleted.

(f) *Section 109* is hereby amended to read as follows:

"Means of Appeal. Any person shall have the right to appeal a decision of the code official to the Board of Appeals as set out in Section 112.1 of the International Building Code 2009."

(g) *Tables 402.4(7), 402.4(8), 402.4(9), 402.4(10), 402.4(11), 402.4(12), 402.4(13),* Semi rigid copper, 402.4(27), 402.4(28) and 402.4(29), are hereby deleted.

(h) *Section 403.4.3, Copper and brass,* is hereby deleted.

(i) *Section 403.5, Metallic Tubing.* Aluminum alloy and steel tubing shall not be used with gases corrosive to such materials. Seamless copper tubing is not to be used as gas line.

(j) *Section 403.5.2, Copper and brass tubing,* is hereby deleted.

(k) *Section 403.10.4(3), Metallic Fittings.* Fittings used with copper or brass pipe shall be copper, brass or bronze, is hereby deleted.

(l) *Section 406.4, Test Pressure Measurement,* is hereby deleted.

(m) *Section 406.4.1* is hereby amended to read as follows:

"Test Pressure. A low-pressure air gauge may be substituted upon approval of the code official, in which case a pressure of twenty (20) pounds shall be sustained by the piping for twenty (20) minutes."

(n) *Section 406.4.2, Test Duration,* is hereby deleted.

(Ord. No. 3154, art. 10, 3-17-03; Ord. No. 3546, art. 18, 9-6-05; Ord. No. 4268, art. 18, 9-19-11; Ord. No. 4403, arts. 13—16, 12-17-12)

## ARTICLE XI. INTERNATIONAL EXISTING BUILDING CODE 2009

Sec. 7-366. Title.

Sec. 7-367. International Existing Building Code/2009—Adopted.

Sec. 7-368. Same—Amendments.

### Sec. 7-366. Title.

This article shall be known as and may be cited as the "International Existing Building Code 2009."

(Ord. No. 3546, art. 19, 9-6-05; Ord. No. 4268, art. 19, 9-19-11)

### Sec. 7-367. International Existing Building Code/2009—Adopted.

The city hereby adopts the 2009 edition of the International Existing Building Code 2009, published by the International Code Council, Inc., as amended in section 7-368 of this Code. Three (3) copies of the 2009 edition of the International Existing Building Code are on file in the office of the city clerk and are available for public use, inspection and examination. The 2009 edition of the International Existing Building Code is hereby incorporated by reference into the Code of ordinances of the city as though fully set out herein.

(Ord. No. 3546, art. 19, 9-6-05; Ord. No. 4268, art. 19, 9-19-11)

### Sec. 7-368. Same—Amendments.

(a) *Section 101.1, Title,* is hereby modified, changed and amended to read as follows:

"Title. These regulations shall be known as the Existing Building Code of the City of Cape Girardeau, Missouri, hereinafter referred to as "this code"."

(b) *Section 103.2, Appointment,* is hereby modified, changed and amended to read as follows:

"Appointment. The code official shall be appointed by the city manager."

(c) *Section 105.1.1, Annual permits,* is hereby repealed in its entirety.

(d) *Section 105.1.2, Annual permit records,* is hereby repealed in its entirety.

(e) *Section 108.6, Refunds,* is hereby repealed in its entirety.

(f) *Section 112.1, General,* is hereby modified changed and amended to read as follows:

"General. In order to hear and decide appeals of orders, decisions, or determinations made by the code official relative to the application and interpretation of this code, there shall be and is hereby created a board of appeals. The board of appeals shall be established set out in Appendix B of the International Building Code as amended."

(g) *Section 112.3, Qualifications,* is hereby modified changed and amended to read as follows:

"Qualifications. The board of appeals shall consist of seven (7) individuals who shall be residents of the city, and shall be as set out in Section B-101.2.2 of the International Building Code as amended."

(h) *Section 102.6, Applicability,* is hereby created to read as follows:

"Applicability. Structures existing prior to September 7, 2011, in which there is work involving additions, alterations or changes of occupancy shall be made to conform to the requirements of this chapter or the provisions of Chapters 4 through 10. The provisions of Sections 102.1 through 102.5 shall apply to existing occupancies that will continue to be, or are proposed to be, in Groups A, B, E, F, M, R, and S. These provisions shall not apply to buildings with occupancies in Group H and Group I."

(i) *Appendix A, Appendix B, and Resource A* are hereby adopted and made a part hereof by reference.

(j) *Appendix A, Chapter A3, Section A301.2, Scope,* is hereby modified, changed and amended to read as follows:

"Scope. The provisions of this chapter are optional for One and two family residential buildings but shall apply to other light, wood-frame residential buildings that are in Seismic Design Categories D, E and F of the 2009 IBC (located in Seismic Zones 3 and 4 of the UBC), containing one or more of the structural weaknesses specified in Section A303."

(Ord. No. 3546, art. 19, 9-6-05; Ord. No. 4268, art. 19, 9-19-11; Ord. No. 4403, art. 17, 12-17-12)

## ARTICLE XII. INTERNATIONAL ENERGY CONSERVATION CODE 2009

Sec. 7-369. Title.

Sec. 7-370. International Energy Conservation Code/2009—Adopted.

Sec. 7-371. Same—Amendments.

### Sec. 7-369. Title.

This article shall be known as and may be cited as the "International Energy Conservation Code 2009."

(Ord. No. 4268, art. 20, 9-19-11)

### Sec. 7-370. International Energy Conservation Code/2009—Adopted.

The city hereby adopts the 2009 edition of the International Energy Conservation Code 2009, published by the International Code Council, Inc., as amended in section 7-371 of this Code. Three (3) copies of the 2009 edition of the International Energy Conservation Code are on file in the office of the city clerk and are available for public use, inspection and examination. The 2009 edition of the International Energy Conservation Code is hereby incorporated by reference into the Code of Ordinances of the city as though fully set out herein.

(Ord. No. 4268, art. 20, 9-19-11)

### Sec. 7-371. Same—Amendments.

(1) *Section 101.1* is hereby modified, changed and amended to read as follows:

"Title. These regulations shall be known as the Energy Conservation Code of the City of Cape Girardeau, Missouri, hereinafter referred to as "this code"."

(2) *Section 108.4* is hereby modified, changed and amended to read as follows:

"Failure to comply. Any person who shall continue any work after having been served with a stop work order, except such work as that person is directed to perform to remove a violation or unsafe condition, shall be liable to a fine of not less than fifty dollars ($50.00) nor more than five hundred dollars ($500.00) per day for each day the violation exists or continues, or imprisonment for a term not to exceed ninety (90) days, or both such fine and imprisonment."

(Ord. No. 4268, art. 20, 9-19-11; Ord. No. 4278, art. 4, 11-21-11)

# Chapter 12 FLOODPLAIN MANAGEMENT REGULATIONS [1]

ARTICLE I. - STATUTORY AUTHORIZATION, FINDINGS OF FACT, AND PURPOSES

ARTICLE II. - GENERAL PROVISIONS

ARTICLE III. - ADMINISTRATION

ARTICLE IV. - PROVISIONS FOR FLOOD HAZARD REDUCTION

ARTICLE V. - FLOODPLAIN MANAGEMENT VARIANCE PROCEDURES

ARTICLE VI. - PENALTIES FOR VIOLATION

ARTICLE VII. - AMENDMENTS

ARTICLE VIII. - DEFINITIONS

---

FOOTNOTE(S):

---

--- (**1**) ---

**Editor's note—** Article 1 of Ord. No. 4254, adopted Aug. 15, 2011, repealed ch. 12 in its entirety and enacted similar provisions to read as herein set out. Former ch. 12 derived from Ord. No. 2454, adopted Dec. 7, 1998. (Back)

**Cross reference—** Buildings, ch. 7; civil defense, ch. 10; stormwater management regulations, ch. 23; streets and sidewalks, ch. 24; subdivision regulations, ch. 25; travel trailer camps, mobile homes and mobile home parks, ch. 27; zoning, ch. 30; community development department, § 2-46; stormwater management system design requirements, § 23-10. (Back)

**State Law reference—** Watershed protection and flood prevention, RSMo, § 278.160 et seq. (Back)

## ARTICLE I. STATUTORY AUTHORIZATION, FINDINGS OF FACT, AND PURPOSES

Sec. 12-1. Statutory authorization.

Sec. 12-2. Findings of fact.

Sec. 12-3. Statement of purpose.

### Sec. 12-1. Statutory authorization.

The Legislature of the State of Missouri has in RSMo § 82.010 and RSMo § 82.020 delegated the responsibility to local governmental units to adopt floodplain management regulations designed to protect the health, safety, and general welfare. Therefore, the city council of the City of Cape Girardeau, Missouri, ordains as follows.

(Ord. No. 4254, art. 1, 8-15-11)

### Sec. 12-2. Findings of fact.

(a) *Flood losses resulting from periodic inundation.* The special flood hazard areas of the City of Cape Girardeau, Missouri, are subject to inundation which results in loss of life and property, health and safety hazards, disruption of commerce and governmental services, extraordinary public expenditures for flood protection and relief, and impairment of the tax base; all of which adversely affect the public health, safety and general welfare.

(b) *General causes of the flood losses.* These flood losses are caused by:

(1) The cumulative effect of development in any delineated floodplain causing increases in flood heights and velocities; and

(2) The occupancy of flood hazard areas by uses vulnerable to floods, hazardous to others, inadequately elevated, or otherwise unprotected from flood damages.

(c) *Methods used to analyze flood hazards.* The flood insurance study (FIS) that is the basis of this chapter uses a standard engineering method of analyzing flood hazards which consist of a series of interrelated steps.

(1) Selection of a base flood that is based upon engineering calculations which permit a consideration of such flood factors as its expected frequency of occurrence, the area inundated, and the depth of inundation. The base flood selected for this chapter is representative of large floods which are characteristic of what can be expected to occur on the particular streams subject to this chapter. It is in the general order of a flood which could be expected to have a one (1) percent chance of occurrence in any one (1) year as delineated on the Federal Insurance Administrator's FIS, and illustrative materials dated September 29, 2011, as amended, and any future revisions thereto.

(2) Calculation of water surface profiles are based on a standard hydraulic engineering analysis of the capacity of the stream channel and overbank areas to convey the regulatory flood.

(3) Computation of a floodway required to convey this flood without increasing flood heights more than one (1) foot at any point.

(4) Delineation of floodway encroachment lines within which no development is permitted that would cause any increase in flood height.

(5) Delineation of flood fringe, i.e., that area outside the floodway encroachment lines, but still subject to inundation by the base flood.

(Ord. No. 4254, art. 1, 8-15-11)

## Sec. 12-3. Statement of purpose.

It is the purpose of this chapter to promote the public health, safety, and general welfare; to minimize those losses described in article I, section 12-2(1); to establish or maintain the city's eligibility for participation in the National Flood Insurance Program (NFIP) as defined in 44 Code of Federal Regulations (CFR) 59.22(a)(3); and to meet the requirements of 44 CFR 60.3(d) by applying the provisions of this chapter to:

(1) Restrict or prohibit uses that are dangerous to health, safety, or property in times of flooding or cause undue increases in flood heights or velocities;

(2) Require uses vulnerable to floods, including public facilities that serve such uses, be provided with flood protection at the time of initial construction; and

(3) Protect individuals from buying lands that are unsuited for the intended development purposes due to the flood hazard.

(Ord. No. 4254, art. 1, 8-15-11)

## ARTICLE II. GENERAL PROVISIONS

Sec. 12-4. Lands to which chapter applies.

Sec. 12-5. Floodplain administrator.

Sec. 12-6. Compliance.

Sec. 12-7. Abrogation and greater restrictions.

Sec. 12-8. Interpretation.

Sec. 12-9. Warning and disclaimer of liability.

Sec. 12-10. Severability.

### Sec. 12-4. Lands to which chapter applies.

This chapter shall apply to all lands within the jurisdiction of the City of Cape Girardeau, Missouri, identified as numbered and unnumbered A zones and AE zones, on the Flood Insurance Rate Map (FIRM) Cape Girardeau County, Missouri, on map panels 29031C0163E, 29031C0175E, 29031C0251E, 29031C0252E, 29031C0253E, 29031C0254E, 29031C0256E, 29031C0258E, 29031C0259E, 29031C0261E, 29031C0262E, 29031C0263E, 29031C0264E, 29031C0266E, 29031C0267E, 29031C0268E, 29031C0269E, 29031C0278E, 29031C0352E, 29031C0355E, and 29031C0356E, dated September 29, 2011, as amended, and any future revisions thereto. In all areas covered by this chapter, no development shall be permitted except through the issuance of a floodplain development permit, granted by the city council of the City of Cape Girardeau or its duly designated representative under such safeguards and restrictions as the city council of the City of Cape Girardeau or the designated representative may reasonably impose for the promotion and maintenance of the general welfare, health of the inhabitants of the city, and as specifically noted in article IV.

(Ord. No. 4254, art. 1, 8-15-11)

### Sec. 12-5. Floodplain administrator.

The city manager or his designee is hereby designated as the floodplain administrator under this chapter.

(Ord. No. 4254, art. 1, 8-15-11)

### Sec. 12-6. Compliance.

No development located within the special flood hazard areas of this city shall be located, extended, converted, or structurally altered without full compliance with the terms of this chapter and other applicable regulations.

(Ord. No. 4254, art. 1, 8-15-11)

ARTICLE II. GENERAL PROVISIONS

### Sec. 12-7. Abrogation and greater restrictions.

It is not intended by this chapter to repeal, abrogate, or impair any existing easements, covenants, or deed restrictions. However, where this chapter imposes greater restrictions, the provisions of this chapter shall prevail. All other ordinances inconsistent with this chapter are hereby repealed to the extent of the inconsistency only.

(Ord. No. 4254, art. 1, 8-15-11)

### Sec. 12-8. Interpretation.

In their interpretation and application, the provisions of this chapter shall be held to be minimum requirements, shall be liberally construed in favor of the governing body, and shall not be deemed a limitation or repeal of any other powers granted by state statutes.

(Ord. No. 4254, art. 1, 8-15-11)

### Sec. 12-9. Warning and disclaimer of liability.

The degree of flood protection required by this chapter is considered reasonable for regulatory purposes and is based on engineering and scientific methods of study. Larger floods may occur on rare occasions or the flood heights may be increased by manmade or natural causes, such as ice jams and bridge openings restricted by debris. This chapter does not imply that areas outside the floodway and flood fringe or land uses permitted within such areas will be free from flooding or flood damage. This chapter shall not create a liability on the part of the City of Cape Girardeau, any officer or employee thereof, for any flood damages that may result from reliance on this chapter or any administrative decision lawfully made thereunder.

(Ord. No. 4254, art. 1, 8-15-11)

### Sec. 12-10. Severability.

If any section, clause, provision, or portion of this chapter is adjudged unconstitutional or invalid by a court of appropriate jurisdiction, the remainder of this chapter shall not be affected thereby.

(Ord. No. 4254, art. 1, 8-15-11)

## ARTICLE III. ADMINISTRATION

Sec. 12-11. Floodplain development permit.

Sec. 12-12. Designation of floodplain administrator.

Sec. 12-13. Duties and responsibilities of floodplain administrator.

Sec. 12-14. Application for floodplain development permit.

### Sec. 12-11. Floodplain development permit.

A floodplain development permit shall be required for all proposed construction or other development, including the placement of manufactured homes, in the areas described in article II, section 12-4. No person, firm, corporation, or unit of government shall initiate any development or substantial improvement or cause the same to be done without first obtaining a separate floodplain development permit for each structure or other development.

(Ord. No. 4254, art. 1, 8-15-11)

### Sec. 12-12. Designation of floodplain administrator.

The city manager or his designee is hereby appointed as floodplain administrator to administer and implement the provisions of this chapter.

(Ord. No. 4254, art. 1, 8-15-11)

### Sec. 12-13. Duties and responsibilities of floodplain administrator.

Duties of the floodplain administrator shall include, but not be limited to:

(1) Review of all applications for floodplain development permits to assure that sites are reasonably safe from flooding and that the floodplain development permit requirements of this chapter have been satisfied;

(2) Review of all applications for floodplain development permits for proposed development to assure that all necessary permits have been obtained from federal, state, or local governmental agencies from which prior approval is required by federal, state, or local law;

(3) Review all subdivision proposals and other proposed new development, including manufactured home parks or subdivisions, to determine whether such proposals will be reasonably safe from flooding;

(4) Issue floodplain development permits for all approved applications;

(5) Notify adjacent communities and the Missouri State Emergency Management Agency (MO SEMA) to any alteration or relocation of a watercourse, and submit evidence of such notification to the Federal Emergency Management Agency (FEMA);

(6) Assure that the flood carrying capacity is not diminished and shall be maintained within the altered or relocated portion of any watercourse;

(7) Verify and maintain a record of the actual elevation (in relation to mean sea level) of the lowest floor, including basement, of all new or substantially improved structures;

(8) Verify and maintain a record of the actual elevation (in relation to mean sea level) that the new or substantially improved nonresidential structures have been floodproofed;

(9) When floodproofing techniques are utilized for a particular nonresidential structure, the floodplain administrator shall require certification from a registered professional engineer or architect.

(Ord. No. 4254, art. 1, 8-15-11)

## Sec. 12-14. Application for floodplain development permit.

To obtain a floodplain development permit, the applicant shall first file an application in writing on a form furnished for that purpose. Every floodplain development permit application shall:

(1) Describe the land on which the proposed work is to be done by lot, block and tract, house and street address, or similar description that will readily identify and specifically locate the proposed structure or work;

(2) Identify and describe the work to be covered by the floodplain development permit;

(3) Indicate the use or occupancy for which the proposed work is intended;

(4) Indicate the assessed value of the structure and the fair market value of the improvement;

(5) Specify whether development is located in designated flood fringe or floodway;

(6) Identify the existing base flood elevation and the elevation of the proposed development;

(7) Give such other information as reasonably may be required by the floodplain administrator;

(8) Be accompanied by plans and specifications for proposed construction; and

(9) Be signed by the permittee or his authorized agent who may be required to submit evidence to indicate such authority;

(10) Be accompanied by the appropriate fee as outlined on the city fee schedule;

(11) Be valid for three (3) years after the date of issuance. If the floodplain development for which the permit was issued is not completed within three (3) years, the permittee may request a renewal of the said permit. The permit renewal fee must be paid in full at the time of the renewal request. The permit renewal fees are outlined on the city fee schedule. The city manager or his designee has the right to approve or deny any permit renewal request.

(Ord. No. 4254, art. 1, 8-15-11)

## ARTICLE IV. PROVISIONS FOR FLOOD HAZARD REDUCTION

Sec. 12-15. General standards.

Sec. 12-16. Specific standards.

Sec. 12-17. Manufactured homes.

Sec. 12-18. Floodway.

Sec. 12-19. Recreational vehicles.

### Sec. 12-15. General standards.

(1) No permit for floodplain development shall be granted for new construction, substantial improvements, and other improvements, including the placement of manufactured homes, within any numbered or unnumbered A zones and AE zones, unless the conditions of this section are satisfied.

(2) All areas identified as unnumbered A zones on the FIRM are subject to inundation of the 100-year flood; however, the base flood elevation is not provided. Development within unnumbered A zones is subject to all provisions of this chapter. If flood insurance study data is not available, the city shall obtain, review, and reasonably utilize any base flood elevation or floodway data currently available from federal, state, or other sources.

(3) Until a floodway is designated, no new construction, substantial improvements, or other development, including fill, shall be permitted within any numbered A zone or AE zone on the FIRM, unless it is demonstrated that the cumulative effect of the proposed development, when combined with all other existing and anticipated development, will not increase the water surface elevation of the base flood more than one (1) foot at any point within the city.

(4) All new construction, subdivision proposals, substantial improvements, prefabricated structures, placement of manufactured homes, and other developments shall require:

(a) Design or adequate anchorage to prevent flotation, collapse, or lateral movement of the structure resulting from hydrodynamic and hydrostatic loads, including the effects of buoyancy;

(b) Construction with materials resistant to flood damage;

(c) Utilization of methods and practices that minimize flood damages;

(d) All electrical, heating, ventilation, plumbing, air-conditioning equipment, and other service facilities be designed and/or located so as to prevent water from entering or accumulating within the components during conditions of flooding;

(e) New or replacement water supply systems and/or sanitary sewage systems be designed to minimize or eliminate infiltration of floodwaters into the systems and discharges from the systems into floodwaters, and on-site waste disposal systems be located so as to avoid impairment or contamination; and

(f) Subdivision proposals and other proposed new development, including manufactured home parks or subdivisions, located within special flood hazard areas are required to assure that:

1. All such proposals are consistent with the need to minimize flood damage;

2. All public utilities and facilities, such as sewer, gas, electrical, and water systems are located and constructed to minimize or eliminate flood damage;

3. Adequate drainage is provided so as to reduce exposure to flood hazards; and

4. All proposals for development, including proposals for manufactured home parks and subdivisions, of five (5) acres or fifty (50) lots, whichever is lesser, include within such proposals base flood elevation data.

(5) Storage, material, and equipment.

(a) The storage or processing of materials within the special flood hazard area that are in time of flooding buoyant, flammable, explosive, or could be injurious to human, animal, or plant life is prohibited.

(b) Storage of other material or equipment may be allowed if not subject to major damage by floods, if firmly anchored to prevent flotation, or if readily removable from the area within the time available after a flood warning.

(6) Agricultural structures. Structures used solely for agricultural purposes in connection with the production, harvesting, storage, drying, or raising of agricultural commodities, including the raising of livestock, may be constructed at-grade and wet-floodproofed provided there is no human habitation or occupancy of the structure; the structure is of single-wall design; there is no permanent retail, wholesale, or manufacturing use included in the structure; a variance has been granted from the floodplain management requirements of this chapter; and a floodplain development permit has been issued.

(7) Accessory structures. Structures used solely for parking and limited storage purposes, not attached to any other structure on the site, of limited investment value, and not larger than four hundred (400) square feet, may be constructed at-grade and wet-floodproofed provided there is no human habitation or occupancy of the structure; the structure is of single-wall design; a variance has been granted from the standard floodplain management requirements of this chapter; and a floodplain development permit has been issued.

(Ord. No. 4254, art. 1, 8-15-11)

## Sec. 12-16. Specific standards.

(1) In all areas identified as numbered and unnumbered A zones and AE zones, where base flood elevation data have been provided, as set forth in article IV, section 12-15(2), the following provisions are required:

(a) *Residential construction.* New construction or substantial-improvement of any residential structure, including manufactured homes, shall have the lowest floor, including basement, elevated to one (1) foot above base flood elevation.

(b) *Nonresidential construction.* New construction or substantial improvement of any commercial, industrial, or other nonresidential structure, including manufactured homes, shall have the lowest floor, including basement, elevated to one (1) foot above the base flood elevation or, together with attendant utility and sanitary facilities, be floodproofed so that below the base flood elevation the structure is watertight with walls substantially impermeable to the passage of water and with structural components having the capability of resisting hydrostatic and hydrodynamic loads and effects of buoyancy. A registered professional engineer or architect shall certify that the standards of this subsection are satisfied. Such certification shall be provided to the floodplain administrator as set forth in article III, section 12-13(9).

(c) Require, for all new construction and substantial-improvements, that fully enclosed areas below lowest floor used solely for parking of vehicles, building access, or storage in an area other than a basement and that are subject to flooding shall be designed to automatically equalize hydrostatic flood forces on exterior walls by allowing for the entry and exit of floodwaters.

Designs for meeting this requirement must either be certified by a registered professional engineer or architect or meet or exceed the following minimum criteria:

1. A minimum of two (2) openings having a total net area of not less than one (1) square inch for every square foot of enclosed area subject to flooding shall be provided; and
2. The bottom of all openings shall be no higher than one (1) foot above grade. Openings may be equipped with screens, louvers, valves, or other coverings or devices provided that they permit the automatic entry and exit of floodwaters.

(Ord. No. 4254, art. 1, 8-15-11)

## Sec. 12-17. Manufactured homes.

(1) All manufactured homes to be placed within all unnumbered and numbered A zones and AE zones, on the city's FIRM shall be required to be installed using methods and practices that minimize flood damage. For the purposes of this requirement, manufactured homes must be elevated and anchored to resist flotation, collapse, or lateral movement. Methods of anchoring may include, but are not limited to, use of over-the-top or frame ties to ground anchors.

(2) Require manufactured homes that are placed or substantially improved within unnumbered or numbered A zones and AE zones, on the city's FIRM on sites:

(a) Outside of manufactured home park or subdivision;

(b) In a new manufactured home park or subdivision;

(c) In an expansion to and existing manufactured home park or subdivision; or

(d) In an existing manufactured home park or subdivision on which a manufactured home has incurred substantial damage as the result of a flood,

be elevated on a permanent foundation such that the lowest floor of the manufactured home is elevated to one (1) foot above the base flood elevation and be securely attached to an adequately anchored foundation system to resist flotation, collapse, and lateral movement.

(3) Require that manufactured homes to be placed or substantially improved on sites in an existing manufactured home park or subdivision within all unnumbered and numbered A zones and AE zones, on the city's FIRM, that are not subject to the provisions of article IV, section 12-17(2) of this chapter, be elevated so that either:

(a) The lowest floor of the manufactured home is at one (1) foot above the base flood level; or

(b) The manufactured home chassis is supported by reinforced piers or other foundation elements of at least equivalent strength that are no less than thirty-six (36) inches in height above grade and be securely attached to an adequately anchored foundation system to resist flotation, collapse, and lateral movement.

(Ord. No. 4254, art. 1, 8-15-11)

## Sec. 12-18. Floodway.

Located within areas of special flood hazard established in article II, section 12-4 are areas designated as floodways. Since the floodway is an extremely hazardous area due to the velocity of floodwaters that carry debris and potential projectiles, the following provisions shall apply:

(1) The city shall select and adopt a regulatory floodway based on the principle that the area chosen for the regulatory floodway must be designed to carry the waters of the base flood without increasing the water surface elevation of that flood more than one (1) foot at any point.

(2) The city shall prohibit any encroachments, including fill, new construction, substantial improvements, and other development within the adopted regulatory floodway unless it has been demonstrated through hydrologic and hydraulic analyses performed in accordance with standard engineering practice that the proposed encroachment would not result in any increase in flood levels within the city during the occurrence of the base flood discharge.

(3) If article IV, section 12-18(2) is satisfied, all new construction and substantial improvements shall comply with all applicable flood hazard reduction provisions of article IV.

(4) In unnumbered A zones, the city shall obtain, review, and reasonably utilize any base flood elevation or floodway data currently available from federal, state, or other sources as set forth in article IV, section 12-15(2).

(Ord. No. 4254, art. 1, 8-15-11)

## Sec. 12-19. Recreational vehicles.

(1) Require that recreational vehicles placed on sites within all unnumbered and numbered A zones and AE zones on the city's FIRM either:

(a) Be on the site for fewer than one hundred eighty (180) consecutive days; or

(b) Be fully licensed and ready for highway use*; or

(c) Meet the permitting, elevation, and the anchoring requirements for manufactured homes of this chapter.

* A recreational vehicle is ready for highway use if it is on its wheels or jacking system, is attached to the site only by quick-disconnect type utilities and security devices, and has no permanently attached additions.

(Ord. No. 4254, art. 1, 8-15-11)

## ARTICLE V. FLOODPLAIN MANAGEMENT VARIANCE PROCEDURES

Sec. 12-20. Establishment of appeal board.

Sec. 12-21. Responsibility of appeal board.

Sec. 12-22. Further appeals.

Sec. 12-23. Floodplain management variance criteria.

Sec. 12-24. Conditions for approving floodplain management variances.

Sec. 12-25. Conditions for approving variances for agricultural structures.

Sec. 12-26. Conditions for approving variances for accessory structures.

### Sec. 12-20. Establishment of appeal board.

The board of adjustment as established by the City of Cape Girardeau shall hear and decide appeals and requests for variances from the floodplain management requirements of this chapter.

(Ord. No. 4254, art. 1, 8-15-11)

### Sec. 12-21. Responsibility of appeal board.

Where an application for a floodplain development permit or request for a variance from the floodplain management regulations is denied by the city manager or his designee, the applicant may apply for such floodplain development permit or variance directly to the board of adjustment, as defined in article V, section 12-20.

The board of adjustment shall hear and decide appeals when it is alleged that there is an error in any requirement, decision, or determination made by the city manager or his designee in the enforcement or administration of this chapter.

(Ord. No. 4254, art. 1, 8-15-11)

### Sec. 12-22. Further appeals.

Any person aggrieved by the decision of the board of adjustment or any taxpayer may appeal such decision to the circuit court of Cape Girardeau County as provided in RSMo § 89.110.

(Ord. No. 4254, art. 1, 8-15-11)

### Sec. 12-23. Floodplain management variance criteria.

In passing upon such applications for variances, the board of adjustment shall consider all technical data and evaluations, all relevant factors, standards specified in other sections of this chapter, and the following criteria:

(1) The danger to life and property due to flood damage;

(2) The danger that materials may be swept onto other lands to the injury of others;

(3) The susceptibility of the proposed facility and its contents to flood damage and the effect of such damage on the individual owner;

(4) The importance of the services provided by the proposed facility to the city;

(5) The necessity to the facility of a waterfront location, where applicable;

(6) The availability of alternative locations, not subject to flood damage, for the proposed use;

(7) The compatibility of the proposed use with existing and anticipated development;

(8) The relationship of the proposed use to the comprehensive plan and floodplain management program for that area;

(9) The safety of access to the property in times of flood for ordinary and emergency vehicles;

(10) The expected heights, velocity, duration, rate of rise and sediment transport of the flood waters, if applicable, expected at the site; and

(11) The costs of providing governmental services during and after flood conditions, including maintenance and repair of public utilities and facilities such as sewer, gas, electrical, and water systems; streets; and bridges.

(Ord. No. 4254, art. 1, 8-15-11)

## Sec. 12-24. Conditions for approving floodplain management variances.

(1) Generally, variances may be issued for new construction and substantial-improvements to be erected on a lot of one-half (½) acre or less in size contiguous to and surrounded by lots with existing structures constructed below the base flood level, providing items (2) through (6) below have been fully considered. As the lot size increases beyond the one-half-acre, the technical justification required for issuing the variance increases.

(2) Variances may be issued for the reconstruction, rehabilitation, or restoration of structures listed on the National Register of Historic Places, the state inventory of historic places, or local inventory of historic places upon determination provided the proposed activity will not preclude the structure's continued historic designation.

(3) Variances shall not be issued within any designated floodway if any increase in flood levels during the base flood discharge would result.

(4) Variances shall only be issued upon a determination that the variance is the minimum necessary, considering the flood hazard, to afford relief.

(5) Variances shall only be issued upon (a) a showing of good and sufficient cause, (b) a determination that failure to grant the variance would result in exceptional hardship to the applicant, and (c) a determination that the granting of a variance will not result in increased flood heights, additional threats to public safety, extraordinary public expense, create nuisances, cause fraud on or victimization of the public, or conflict with existing local laws or ordinances.

(6) The city shall notify the applicant in writing over the signature of a city official that (1) the issuance of a variance to construct a structure below base flood level will result in increased premium rates for flood insurance up to amounts as high as twenty-five dollars ($25.00) for one hundred dollars ($100.00) of insurance coverage and (2) such construction below the base flood level increases risks to life and property. Such notification shall be maintained with the record of all variance actions as required by this chapter.

(Ord. No. 4254, art. 1, 8-15-11)

## Sec. 12-25. Conditions for approving variances for agricultural structures.

Any variance granted for an agricultural structure shall be decided individually based on a case by case analysis of the building's unique circumstances. Variances granted shall meet the following conditions as well as those criteria and conditions set forth in article V, sections 12-23 and 12-24 of this chapter.

In order to minimize flood damages during the 100-year flood and the threat to public health and safety, the following conditions shall be included for any variance issued for agricultural structures that are constructed at-grade and wet-floodproofed.

(1) All agricultural structures considered for a variance from the floodplain management regulations of this chapter shall demonstrate that the varied structure is located in wide, expansive floodplain areas and no other alternate location outside of the special flood hazard area exists for the agricultural structure. Residential structures, such as farm houses, cannot be considered agricultural structures.

(2) Use of the varied structures must be limited to agricultural purposes in zone A only as identified on the city's flood insurance rate map (FIRM).

(3) For any new or substantially damaged agricultural structures, the exterior and interior building components and elements (i.e., foundation, wall framing, exterior and interior finishes, flooring, etc.) below the base flood elevation, must be built with flood-resistant materials in accordance with article IV, section 12-15(4)(b) of this chapter.

(4) The agricultural structures must be adequately anchored to prevent flotation, collapse, or lateral movement of the structures in accordance with article IV, section 12-15(4)(a) of this chapter. All of the building's structural components must be capable of resisting specific flood-related forces including hydrostatic, buoyancy, and hydrodynamic and debris impact forces.

(5) Any mechanical, electrical, or other utility equipment must be located above the base flood elevation or floodproofed so that they are contained within a watertight, floodproofed enclosure that is capable of resisting damage during flood conditions in accordance with article IV, section 12-15(4)(d) of this chapter.

(6) The agricultural structures must meet all National Flood Insurance Program (NFIP) opening requirements. The NFIP requires that enclosure or foundation walls, subject to the 100-year flood, contain openings that will permit the automatic entry and exit of floodwaters in accordance with article IV, section 12-16(1)(c) of this chapter.

(7) The agricultural structures must comply with the floodplain management floodway encroachment provisions of article IV, section 12-18(2) of this chapter. No variances may be issued for agricultural structures within any designated floodway, if any increase in flood levels would result during the 100-year flood.

(8) Major equipment, machinery, or other contents must be protected from any flood damage.

(9) No disaster relief assistance under any program administered by any federal agency shall be paid for any repair or restoration costs of the agricultural structures.

(10) The city shall notify the applicant in writing over the signature of a city official that (1) the issuance of a variance to construct a structure below base flood level will result in increased premium rates for flood insurance up to amounts as high as twenty-five dollars ($25.00) for one hundred dollars ($100.00) of insurance coverage and (2) such construction below the base flood level increases risks to life and property. Such notification shall be maintained with the record of all variance actions as required by this chapter.

(11) Wet-floodproofing construction techniques must be reviewed and approved by the floodplain administrator and a registered professional engineer or architect prior to the issuance of any floodplain development permit for construction.

(Ord. No. 4254, art. 1, 8-15-11)

## Sec. 12-26. Conditions for approving variances for accessory structures.

Any variance granted for an accessory structure shall be decided individually based on a case by case analysis of the building's unique circumstances. Variances granted shall meet the following conditions as well as those criteria and conditions set forth in article V, sections 12-23 and 12-24 of this chapter.

In order to minimize flood damages during the 100-year flood and the threat to public health and safety, the following conditions shall be included for any variance issued for accessory structures that are constructed at-grade and wet-floodproofed.

(1) Use of the accessory structures must be solely for parking and limited storage purposes in zone A only as identified on the city's flood insurance rate map (FIRM).

(2) For any new or substantially damaged accessory structures, the exterior and interior building components and elements (i.e., foundation, wall framing, exterior and interior finishes, flooring, etc.) below the base flood elevation, must be built with flood-resistant materials in accordance with article IV, section 12-15(4)(b) of this chapter.

(3) The accessory structures must be adequately anchored to prevent flotation, collapse, or lateral movement of the structure in accordance with article IV, section 12-15(4)(a) of this chapter. All of the building's structural components must be capable of resisting specific flood-related forces including hydrostatic, buoyancy, and hydrodynamic and debris impact forces.

(4) Any mechanical, electrical, or other utility equipment must be located above the base flood elevation or floodproofed so that they are contained within a watertight, floodproofed enclosure that is capable of resisting damage during flood conditions in accordance with article IV, section 12-15(4)(d) of this chapter.

(5) The accessory structures must meet all National Flood Insurance Program (NFIP) opening requirements. The NFIP requires that enclosure or foundation walls, subject to the 100-year flood, contain openings that will permit the automatic entry and exit of floodwaters in accordance with article IV, section 12-16(1)(c) of this chapter.

(6) The accessory structures must comply with the floodplain management floodway encroachment provisions of article IV, section 12-18(2) of this chapter. No variances may be issued for accessory structures within any designated floodway, if any increase in flood levels would result during the 100-year flood.

(7) Equipment, machinery, or other contents must be protected from any flood damage.

(8) No disaster relief assistance under any program administered by any Federal agency shall be paid for any repair or restoration costs of the accessory structures.

(9) The city shall notify the applicant in writing over the signature of a city official that (1) the issuance of a variance to construct a structure below base flood level will result in increased premium rates for flood insurance up to amounts as high as twenty-five dollars ($25.00) for one hundred dollars ($100.00) of insurance coverage and (2) such construction below the base flood level increases risks to life and property. Such notification shall be maintained with the record of all variance actions as required by this chapter.

(10) Wet-floodproofing construction techniques must be reviewed and approved by the floodplain administrator and registered professional engineer or architect prior to the issuance of any floodplain development permit for construction.

(Ord. No. 4254, art. 1, 8-15-11)

## ARTICLE VI. PENALTIES FOR VIOLATION

Sec. 12-27. Penalties for violation.

### Sec. 12-27. Penalties for violation.

Violation of the provisions of this chapter or failure to comply with any of its requirements (including violations of conditions and safeguards established in connection with granting of variances) shall constitute a misdemeanor. Any person who violates this chapter or fails to comply with any of its requirements shall, upon conviction thereof, be fined not more than five hundred dollars ($500.00), and/or up to ninety (90) days in the city jail, and in addition, shall pay all costs and expenses involved in the case. Each day such violation continues shall be considered a separate offense. Nothing herein contained shall prevent the City of Cape Girardeau or other appropriate authority from taking such other lawful action as is necessary to prevent or remedy any violation.

(Ord. No. 4254, art. 1, 8-15-11)

## ARTICLE VII. AMENDMENTS

Sec. 12-28. Amendments.

### Sec. 12-28. Amendments.

The regulations, restrictions, and boundaries set forth in this chapter may from time to time be amended, supplemented, changed, or appealed to reflect any and all changes in the National Flood Disaster Protection Act of 1973, provided, however, that no such action may be taken until after a public hearing in relation thereto, at which parties of interest and citizens shall have an opportunity to be heard. Notice of the time and place of such hearing shall be published in a newspaper of general circulation in the City of Cape Girardeau. At least twenty (20) days shall elapse between the date of this publication and the public hearing. A copy of such amendments will be provided to the Region VII office of the Federal Emergency Management Agency (FEMA). The regulations of this chapter are in compliance with the National Flood Insurance Program (NFIP) regulations.

(Ord. No. 4254, art. 1, 8-15-11)

## ARTICLE VIII. DEFINITIONS

Sec. 12-29. Definitions.

### Sec. 12-29. Definitions.

Unless specifically defined below, words or phrases used in this chapter shall be interpreted so as to give them the same meaning they have in common usage and to give this chapter its most reasonable application.

*100-year flood:* See *Base flood.*

*Accessory structure* means the same as "appurtenant structure."

*Actuarial rates:* See *Risk premium rates.*

*Administrator* means the Federal Insurance Administrator.

*Agency* means the Federal Emergency Management Agency (FEMA).

*Agricultural commodities* means agricultural products and livestock.

*Agricultural structure* means any structure used exclusively in connection with the production, harvesting, storage, drying, or raising of agricultural commodities.

*Appeal* means a request for review of the floodplain administrator's interpretation of any provision of this chapter or a request for a variance.

*Appurtenant structure* means a structure that is on the same parcel of property as the principle structure to be insured and the use of which is incidental to the use of the principal structure.

*Area of special flood hazard* is the land in the floodplain within the city subject to a one (1) percent or greater chance of flooding in any given year.

*Base flood* means the flood having a one (1) percent chance of being equaled or exceeded in any given year.

*Basement* means any area of the structure having its floor subgrade (below ground level) on all sides.

*Building:* See *Structure.*

*Chief executive officer* means the city manager of the City of Cape Girardeau, the official of the community who is charged with the authority to implement and administer laws, ordinances, and regulations for the city.

*Community* means any state or area or political subdivision thereof, which has authority to adopt and enforce floodplain management regulations for the areas within its jurisdiction.

*Development* means any manmade change to improved or unimproved real estate, including, but not limited to, buildings or other structures, levees, levee systems, mining, dredging, filling, grading, paving, excavation or drilling operations, or storage of equipment or materials.

*Elevated building* means for insurance purposes, a non-basement building which has its lowest elevated floor raised above ground level by foundation walls, shear walls, posts, piers, pilings, or columns.

ARTICLE VIII. DEFINITIONS

*Eligible community* or *participating community* means a community for which the Administrator has authorized the sale of flood insurance under the National Flood Insurance Program (NFIP).

*Existing construction* means for the purposes of determining rates, structures for which the "start of construction" commenced before the effective date of the FIRM or before January 1, 1975, for FIRMs effective before that date. "Existing construction" may also be referred to as "existing structures."

*Existing manufactured home park or subdivision* means a manufactured home park or subdivision for which the construction of facilities for servicing the lots on which the manufactured homes are to be affixed (including, at a minimum, the installation of utilities, the construction of streets, and either final site grading or the pouring of concrete pads) is completed before the effective date of the floodplain management regulations adopted by the city.

*Expansion to an existing manufactured home park or subdivision* means the preparation of additional sites by the construction of facilities for servicing the lots on which the manufactured homes are to be affixed (including the installation of utilities, the construction of streets, and either final site grading or the pouring of concrete pads).

*Flood* or *flooding* means a general and temporary condition of partial or complete inundation of normally dry land areas from (1) the overflow of inland and/or (2) the unusual and rapid accumulation or runoff of surface waters from any source.

*Flood boundary and floodway map (FBFM)* means an official map of the city on which the administrator has delineated both special flood hazard areas and the designated regulatory floodway.

*Flood elevation determination* means a determination by the administrator of the water surface elevations of the base flood, that is, the flood level that has a one (1) percent or greater chance of occurrence in any given year.

*Flood elevation study* means an examination, evaluation and determination of flood hazards.

*Flood fringe* means the area outside the floodway encroachment lines, but still subject to inundation by the regulatory flood.

*Flood hazard boundary map (FHBM)* means an official map of the city, issued by the administrator, where the boundaries of the flood areas having special flood hazards have been designated as (unnumbered or numbered) A zones.

*Flood insurance rate map (FIRM)* means an official map of the city, on which the administrator has delineated both the special flood hazard areas and the risk premium zones applicable to the city.

*Flood insurance study (FIS)* means an examination, evaluation and determination of flood hazards and, if appropriate, corresponding water surface elevations.

*Floodplain* or *floodprone area* means any land area susceptible to being inundated by water from any source (see *Flooding*).

*Floodplain management* means the operation of an overall program of corrective and preventive measures for reducing flood damage, including, but not limited to, emergency preparedness plans, flood control works, and floodplain management regulations.

*Floodplain management regulations* means zoning ordinances, subdivision regulations, building codes, health regulations, special purpose ordinances (such as floodplain and grading ordinances) and other applications of police power. The term describes such state or local regulations, in any combination thereof, that provide standards for the purpose of flood damage prevention and reduction.

*Floodproofing* means any combination of structural and nonstructural additions, changes, or adjustments to structures that reduce or eliminate flood damage to real estate or improved real property, water and sanitary facilities, or structures and their contents.

ARTICLE VIII. DEFINITIONS

*Floodway* or *regulatory floodway* means the channel of a river or other watercourse and the adjacent land areas that must be reserved in order to discharge the base flood without cumulatively increasing the water surface elevation more than one (1) foot.

*Floodway encroachment lines* means the lines marking the limits of floodways on federal, state and local floodplain maps.

*Freeboard* means a factor of safety usually expressed in feet above a flood level for purposes of floodplain management. "Freeboard" tends to compensate for the many unknown factors that could contribute to flood heights greater than the height calculated for a selected size flood and floodway conditions, such as bridge openings and the hydrological effect of urbanization of the watershed.

*Functionally dependent use* means a use that cannot perform its intended purpose unless it is located or carried out in close proximity to water. This term includes only docking facilities and facilities that are necessary for the loading and unloading of cargo or passengers, but does not include long-term storage or related manufacturing facilities.

*Highest adjacent grade* means the highest natural elevation of the ground surface prior to construction next to the proposed walls of a structure.

*Historic structure* means any structure that is:

(a) Listed individually in the National Register of Historic Places (a listing maintained by the Department of the Interior) or preliminarily determined by the Secretary of the Interior as meeting the requirements for individual listing on the National Register;

(b) Certified or preliminarily determined by the Secretary of the Interior as contributing to the historical significance of a registered historic district or a district preliminarily determined by the Secretary to qualify as a registered historic district;

(c) Individually listed on a state inventory of historic places in states with historic preservation programs which have been approved by the Secretary of the Interior; or

(d) Individually listed on a local inventory of historic places in communities with historic preservation programs that have been certified either (1) by an approved state program as determined by the Secretary of the Interior or (2) directly by the Secretary of the Interior in states without approved programs.

*Lowest floor* means the lowest floor of the lowest enclosed area, including basement. An unfinished or flood-resistant enclosure, usable solely for parking of vehicles, building access, or storage, in an area other than a basement area, is not considered a building's lowest floor, provided that such enclosure is not built so as to render the structure in violation of the applicable floodproofing design requirements of this chapter.

*Manufactured home* means a structure, transportable in one (1) or more sections, that is built on a permanent chassis and is designed for use with or without a permanent foundation when attached to the required utilities. The term "manufactured home" does not include a "recreational vehicle."

*Manufactured home park or subdivision* means a parcel (or contiguous parcels) of land divided into two (2) or more manufactured home lots for rent or sale.

*Map* means the flood hazard boundary map (FHBM), flood insurance rate map (FIRM), or the flood boundary and floodway map (FBFM) for the city issued by the Federal Emergency Management Agency (FEMA).

*Market value* or *fair market value* means an estimate of what is fair, economic, just and equitable value under normal local market conditions.

ARTICLE VIII. DEFINITIONS

*Mean sea level* means, for purposes of the National Flood Insurance Program (NFIP), the National Geodetic Vertical Datum (NGVD) of 1929 or other datum, to which base flood elevations shown on the city's flood insurance rate map (FIRM) are referenced.

*New construction* means, for the purposes of determining insurance rates, structures for which the "start of construction" commenced on or after the effective date of an initial FIRM or after December 31, 1974, whichever is later, and includes any subsequent improvements to such structures. For floodplain management purposes, "new construction" means structures for which the "start of construction" commenced on or after the effective date of the floodplain management regulations adopted by the city and includes any subsequent improvements to such structures.

*New manufactured home park or subdivision* means a manufactured home park or subdivision for which the construction of facilities for servicing the lot on which the manufactured homes are to be affixed (including, at a minimum, the installation of utilities, the construction of streets, and either final site grading or the pouring of concrete pads) is completed on or after the effective date of floodplain management regulations adopted by the city.

*NFIP* means the National Flood Insurance Program (NFIP).

*Participating community* also known as an "eligible community," means a community in which the administrator has authorized the sale of flood insurance.

*Person* includes any individual or group of individuals, corporation, partnership, association, or any other entity, including federal, state, and local governments and agencies.

*Principally above ground* means that at least fifty-one (51) percent of the actual cash value of the structure, less land value, is above ground.

*Recreational vehicle* means a vehicle which is:

(a) Built on a single chassis;

(b) Four hundred (400) square feet or less when measured at the largest horizontal projections;

(c) Designed to be self-propelled or permanently towable by a light-duty truck; and

(d) Designed primarily not for use as a permanent dwelling but as temporary living quarters for recreational, camping, travel, or seasonal use.

*Remedy a violation* means to bring the structure or other development into compliance with federal, state, or local floodplain management regulations; or, if this is not possible, to reduce the impacts of its noncompliance.

*Repetitive loss* means flood-related damages sustained by a structure on two (2) separate occasions during a ten-year period for which the cost of repairs at the time of each such flood event, equals or exceeds twenty-five (25) percent of the market value of the structure before the damage occurred.

*Risk premium rates* means those rates established by the administrator pursuant to individual community studies and investigations which are undertaken to provide flood insurance in accordance with Section 1307 of the National Flood Disaster Protection Act of 1973 and the accepted actuarial principles. "Risk premium rates" include provisions for operating costs and allowances.

*Special flood hazard area:* See *Area of special flood hazard.*

*Special hazard area* means an area having special flood hazards and shown on an FHBM, FIRM or FBFM as zones (unnumbered or numbered) A and AE.

*Start of construction* includes substantial improvements, and means the date the building permit was issued, provided the actual start of construction, repair, reconstruction, rehabilitation, addition placement, or other improvements were within one hundred eighty (180) days of the permit date. The "actual start" means either the first placement of permanent construction of a structure on a site, such as the pouring of

slabs or footings, the installation of piles, the construction of columns, any work beyond the stage of excavation, or the placement of a manufactured home on a foundation. Permanent construction does not include land preparation, such as clearing, grading and filling, the installation of streets and/or walkways, excavation for a basement, footings, piers, foundations, the erection of temporary forms, nor installation on the property of accessory structures, such as garages or sheds not occupied as dwelling units or not part of the main structure. For a substantial improvement, the "actual start of construction" means the first alteration of any wall, ceiling, floor, or other structural part of a building, whether or not that alteration affects the external dimensions of the building.

*State coordinating agency* means that agency of the state government, or other office designated by the governor of the state or by state statute at the request of the administrator to assist in the implementation of the National Flood Insurance Program (NFIP) in that state.

*Structure* means, for floodplain management purposes, a walled and roofed building, including a gas or liquid storage tank, that is principally above ground, as well as a manufactured home. "Structure", for insurance purposes, means a walled and roofed building, other than a gas or liquid storage tank, that is principally above ground and affixed to a permanent site, as well as a manufactured home on a permanent foundation. For the latter purpose, the term includes a building while in the course of construction, alteration or repair, but does not include building materials or supplies intended for use in such construction, alteration or repair, unless such materials or supplies are within an enclosed building on the premises.

*Substantial damage* means damage of any origin sustained by a structure whereby the cost of restoring the structure to its before-damaged condition would equal or exceed fifty (50) percent of the market value of the structure before the damage occurred. The term includes "repetitive loss buildings" (see definition). For the purposes of this definition, "repair" is considered to occur when the first repair or reconstruction of any wall, ceiling, floor, or other structural part of the building commences. The term does not apply to:

(a) Any project for improvement of a building required to comply with existing health, sanitary, or safety code specifications which have been identified by the code enforcement official and which are solely necessary to assure safe living conditions; or

(b) Any alteration of a "historic structure" provided that the alteration will not preclude the structure's continued designation as a "historic structure"; or

(c) Any improvement to a building.

*Substantial improvement* means any combination of reconstruction, alteration, or improvement to a building, taking place during a ten-year period, in which the cumulative percentage of improvement equals or exceeds fifty (50) percent of the current market value of the building. For the purposes of this definition, an improvement occurs when the first alteration of any wall, ceiling, floor, or other structural part of the building commences, whether or not that alteration affects the external dimensions of the building. This term includes structures, which have incurred "repetitive loss" or "substantial damage", regardless of the actual repair work done. The term does not apply to:

(a) Any project for improvement of a building required to comply with existing health, sanitary, or safety code specifications which have been identified by the city manager or his designee and which are solely necessary to assure safe living conditions; or

(b) Any alteration of an "historic structure" provided that the alteration will not preclude the structure's continued designation as an "historic structure"; or

(c) Any building that has been damaged from any source or is categorized as repetitive loss.

*Substantially improved existing manufactured home parks or subdivisions* is where the repair, reconstruction, rehabilitation or improvement of the streets, utilities and pads equals or exceeds fifty (50)

percent of the value of the streets, utilities and pads before the repair, reconstruction or improvement commenced.

*Variance* means a grant of relief by the city from the terms of a floodplain management regulation. Flood insurance requirements remain in place for any varied use or structure and cannot be varied by the city.

*Violation* means the failure of a structure or other development to be fully compliant with the city's floodplain management regulations. A structure or other development without the elevation certificate, other certifications, or other evidence of compliance required by this chapter is presumed to be in violation until such time as that documentation is provided.

*Water surface elevation* means the height, in relation to the National Geodetic Vertical Datum (NGVD) of 1929 (or other datum where specified) of floods of various magnitudes and frequencies in the floodplain.

(Ord. No. 4254, art. 1, 8-15-11)

# Chapter 21 PUBLIC IMPROVEMENTS AND SPECIAL ASSESSMENTS [1]

ARTICLE I. - IN GENERAL

ARTICLE II. - LAND ACQUISITION AND PUBLIC IMPROVEMENTS

ARTICLE III. - SPECIAL ASSESSMENT PROJECTS

ARTICLE IV. - VACATING CITY STREETS

---

FOOTNOTE(S):

---

--- (**1**) ---

**Cross reference—** Streets and sidewalks, ch. 24; water and sewers, ch. 29. (Back)

**State Law reference—** Public improvements, RSMo, § 71.290 et seq. (Back)

## ARTICLE I. IN GENERAL

Secs. 21-1—21-25. Reserved.

### Secs. 21-1—21-25. Reserved.

## ARTICLE II. LAND ACQUISITION AND PUBLIC IMPROVEMENTS

Sec. 21-26. Acquisition of property interests.

Sec. 21-27. Condemnation procedure.

Sec. 21-28. Public improvements.

Sec. 21-29. Funding public improvements.

Secs. 21-30—21-45. Reserved.

### Sec. 21-26. Acquisition of property interests.

The city shall have full power and authority to acquire interest in real estate for any public use by gift, devise, purchase, lease, dedication or the exercise of the power of eminent domain by condemnation proceedings.

(Code 1967, § 23A-1)

### Sec. 21-27. Condemnation procedure.

Except where otherwise provided by law, the city in exercising the power of eminent domain shall follow the procedures set forth in the Missouri Supreme Court Rules.

(Code 1967, § 23A-2)

### Sec. 21-28. Public improvements.

Except where otherwise provided by law, the construction of public improvements may be authorized by resolution of the city council.

(Code 1967, § 23A-3)

### Sec. 21-29. Funding public improvements.

Public improvements may be funded by any lawful method or combination of methods.

(Code 1967, § 23A-4)

### Secs. 21-30—21-45. Reserved.

## ARTICLE III. SPECIAL ASSESSMENT PROJECTS

Sec. 21-46. Governing law.

Sec. 21-47. Advancement of city funds.

Sec. 21-48. Street improvement projects; right of remonstrance.

Sec. 21-49. Engineer's estimate.

Secs. 21-50—21-65. Reserved.

### Sec. 21-46. Governing law.

The procedure for levying, collecting and enforcing the payment of special assessments for public improvements or special tax bills evidencing such assessments shall be governed by RSMo. 88.811—88.861 and by the provisions of this article. However, the specific procedures for levying, collecting and enforcing the payment of special assessments for water mains, shall additionally be governed either by RSMo. 88.650—88.663, or by creating a special assessment water district and using the procedure in RSMo. 88.832—88.861. The choice of which special assessment procedure shall be used for water mains shall be left to the sole discretion of the city council or its designee.

(Code 1967, § 23A-11; Ord. No. 2219, art. 1, 8-18-97)

### Sec. 21-47. Advancement of city funds.

The city council may provide that the costs of any special assessment project be advanced from city funds and that the special tax bills issued thereafter be made payable to the city.

(Code 1967, § 23A-12)

### Sec. 21-48. Street improvement projects; right of remonstrance.

The city council shall not impose special assessments in excess of fifty (50) percent of the total cost of any street improvement project exceeding twelve hundred (1,200) feet in length where a valid written protest against the improvement has been filed with the city clerk within ten (10) days after the final publication required by RSMo 88.812. In order to be valid, the protest must be signed by a majority of the owners of the abutting lands who reside within the city limits who would be liable for the cost of the improvement, and who shall own a majority of the front feet abutting on the street or part of the street proposed to be improved.

(Ord. No. 909, art. 1(23A-13), 8-20-90)

### Sec. 21-49. Engineer's estimate.

The city engineer shall prepare a cost estimate on every project for which a special assessment is to be levied under the terms of this article. The city may not accept any bid for construction of that project which exceeds the engineer's cost estimate, unless all bids properly received exceeded that estimate. In such a case, the bid accepted by the city may exceed the engineer's estimate by up to ten (10) percent of that estimate, but only if that bid was the lowest bid received on that project.

ARTICLE III. SPECIAL ASSESSMENT PROJECTS

(Ord. No. 3224, art. 1, 9-15-03)

**Secs. 21-50—21-65. Reserved.**

## ARTICLE IV. VACATING CITY STREETS

Sec. 21-66. Power to vacate.

Sec. 21-67. Public hearing.

### Sec. 21-66. Power to vacate.

The city council may, by ordinance, vacate any city street or any interest the city has in any real estate after first holding a public hearing as provided in this article and after finding that such vacation is in the public interest.

(Code 1967, § 23A-34)

### Sec. 21-67. Public hearing.

The city council shall hold a public hearing to consider vacating a city street or the city's interest in any real estate whenever it receives a petition to vacate signed by each owner of property abutting the street sought to be vacated or abutting the property in which the city's interest is sought to be vacated. The city council may, on its own motion, hold a hearing to consider vacating any city street or the city's interest in any real estate. At least ten (10) days' notice of the time and place of such hearing shall be published in a newspaper of general circulation in the city. All interested parties shall be afforded the opportunity at the hearing to speak in favor of or in opposition to the proposed vacation.

(Code 1967, § 23A-35)

# Chapter 23 STORMWATER MANAGEMENT REGULATIONS [1]

Sec. 23-1. Definitions.

Sec. 23-2. Purpose.

Sec. 23-3. Applicability.

Sec. 23-4. Exemptions.

Sec. 23-5. Stormwater management plan application.

Sec. 23-6. Stormwater management plan.

Sec. 23-7. Project classification and fees.

Sec. 23-8. General design requirements for stormwater management plan and SWPPP.

Sec. 23-9. Hydraulic design considerations.

Sec. 23-10. Stormwater management system design requirements.

Sec. 23-11. Rights-of-way and easements.

Sec. 23-12. Maintenance responsibilities for stormwater management facilities.

Sec. 23-13. Illicit discharges.

Sec. 23-14. Plan adherence.

Sec. 23-15. Enforcement.

Sec. 23-16. Penalties for violation.

Sec. 23-17. Vested rights.

Sec. 23-18. Conflict with other ordinances and codes.

Sec. 23-19. Other permits.

Sec. 23-20. Interpretation.

Sec. 23-21. Abrogation and greater restrictions.

Sec. 23-22. Liability disclaimer.

Sec. 23-23. Final approval required.

## Sec. 23-1. Definitions.

As used in this chapter, the following definitions apply:

*Adverse impact.* Any modifications, alterations, or effects on a feature or characteristic of surface waters including their quality, quantity, hydrodynamics, surface area, species composition, living resources, aesthetics or usefulness for human or natural uses which are or may potentially be harmful or injurious to human health, welfare, safety or property, to biological productivity, diversity, or stability, or which unreasonably interfere with the enjoyment of life or property, including outdoor recreation. The term includes secondary and cumulative, as well as direct impacts.

*Applicant.* The record owner, or his authorized representative, of a tract of land that is the site of development, or development activity within the scope of this chapter.

*Base flood elevation.* The elevation at any location delineating high waters having a one (1) percent probability of being equaled or exceeded in any given year, as determined by FEMA and described on the flood insurance rate maps (FIRMs).

*Best management practice (BMP).* Any physical, chemical or managerial practice that reduces soil erosion or reduces the amount of sediment or other pollutants discharging to or potentially discharging to the MS4. There are structural and nonstructural BMPs.

*Building.* Any structure built for the support, shelter or enclosure of persons, animals, chattels or movable property of any kind.

*Capacity of a storm drainage facility.* The maximum ability of a storm drainage facility to convey, detain or retain stormwater flows without causing substantial damage to public or private property, and in the case of a pipe, without surcharging.

*Channel.* A natural or artificial open watercourse with definite bed and banks which periodically or continuously contains moving water or which forms a connecting link between two (2) bodies of water.

*Clearing.* The act of removing trees or vegetation from a tract of land and disturbing soil conditions.

*Conduit.* Any channel, pipe, sewer or culvert used for the conveyance or movement of water, whether open or closed.

*Control device.* An element of a discharge structure which allows the gradual release of water under controlled conditions.

*Control elevation.* The design elevation of a discharge structure at which, or below which, water is contained behind the structure.

*CPESC.* Certified professional in erosion and sediment control.

*Detention.* The delay of storm runoff prior to discharge into receiving waters.

*Detention basin.* A facility constructed or modified to restrict the discharge of stormwater to a prescribed maximum rate, and to concurrently detain the excess waters that accumulate behind the outlet. A wet bottom detention basin is a structure designed to retain a permanent pool of water after having provided its planned detention of runoff during a storm event. A dry bottom detention basin is designed to be completely dewatered after having provided its planned detention of runoff during a storm event.

*Detention storage.* The temporary detaining or storage of stormwater in storage basins, or rooftops, in streets, parking lots, school yards, parks, open space, or other areas under predetermined and controlled conditions, with the rate of drainage therefrom regulated by appropriately installed devices.

*Detention volume.* The volume of water equal to the difference between the control elevation of a discharge structure and the maximum level at which water can be accumulated prior to discharge times the average area of open surface storage (between the control elevation and maximum level) behind the discharge structure.

*Developer.* Any individual, firm, corporation, association, partnership, or other entity involved in commencing proceedings under this chapter to effect the development of land for himself or another.

*Development* or *development activity.* Any manmade change to improved or unimproved land, including, but not limited to, buildings or other structures, mining, dredging, filling, grading, paving, excavation, or drilling operation. Any subdivision of land as defined in the city's subdivision regulations, excluding minor subdivisions.

*Differential runoff.* The difference in rate and volume of stormwater runoff from a parcel or project in its undeveloped natural condition and its developed condition is known as the differential runoff.

*Discharge.* The rate of outflow of water from detention storage.

*Discharge structure.* A structural device, usually of concrete, metal, timber, etc., through which water is discharged from a project to the receiving water.

*Drainage area.* The area from which water is carried off by a drainage system; a watershed or catchment area.

*Drainage easement.* An easement for the sole purpose of allowing water to flow through it. The city shall not be responsible for maintenance in a drainage easement.

*Drainage and maintenance easement.* An easement for the purpose of allowing water to flow through it. The city shall be responsible for maintenance in a drainage and maintenance easement.

*Drainage facility.* An element in a drainage system which includes, but is not limited to, any of the following: conduits and appurtenant features, canals, channels, detention basins, ditches, streams, culverts, streets and pumping stations.

*Drainage system.* The surface or subsurface system which conveys water from or over the land, including all watercourses, water bodies and wetlands (also referred to as the "stormwater management system").

*Easement.* A grant by a property owner to the public, a corporation, or a person of the use of land for a specific purpose.

*Elevation.* The height in feet above mean sea level according to National Geodetic Vertical Datum (NGVD).

*Emergency spillway.* A saddle or low point facility located around the rim of a dammed impoundment such as a detention or retention basin for providing an efficient and safe means of conveying the maximum design flood discharge through the impoundment, without overtopping the dam.

*Erosion.* The wearing away of the land surface by the action of the wind, water, ice, gravity, or any combination thereof.

*Excess stormwater runoff.* The volume and rate of flow of stormwater discharged from a drainage area which is or will be in excess of that volume and rate which is specified in this chapter.

*Fifteen-year storm.* A rainstorm of varying duration and intensity having a 6.67 percent probability of being equaled or exceeded in any given year.

*Filling.* To place soil, rock, or other material over the natural topography of a site such that the natural grade and/or elevation is altered.

*Floodplain.* The special flood hazard land adjoining a watercourse, the surface elevation of which is equal to or lower than the base flood elevation (the 100-year flood), which is subject to periodic inundation during floods.

*Flood fringe.* The higher portion of the floodplain, immediately adjacent to and on either side of the floodway, occupied by quiescent or slow moving waters during floods.

*Floodway.* The channel of a watercourse and those portions of the adjoining floodplain which are reasonably required to carry and discharge the base flood.

*Grading.* To level or smooth to a desired or horizontal gradient.

*High-water elevation.* The elevation of floodwaters of a flood of specified frequency or occurrence at any given point.

*Illicit discharge.* Any direct or indirect discharge to the city's MS4 that is not composed entirely of stormwater, unless exempt pursuant to city ordinance.

*Impervious surface.* A surface which has been compacted or covered with a layer of materials so that it is highly resistant to infiltration of water. The term includes most conventionally surfaced streets, roofs, sidewalks, parking lots and similar structures.

*Improvement.* A structure on, or other alteration of land on a given site, including, but not limited to, grading, street paving, storm sewers, sanitary sewers and utilities.

*MS4.* Municipal separate storm sewer system.

*Natural watercourse.* A channel that is formed through the natural flow of stormwater runoff influenced by area topography. The channel can carry a flow of water continuously or intermittently. Such a channel can include but not be limited to swales, streams, creeks, gullies, ravines, or rivers of varying depths and lengths. These channels carry a stream of water which flows along a naturally defined path, usually with a bed and banks. It should, on casual examination, present the unmistakable evidence of the frequent action of running water. If the flow of water occurs periodically from natural causes and reaches a plainly defined channel of a permanent character, this is sufficient to establish a natural watercourse. A natural watercourse may be altered through construction or development activities, and yet remain a natural watercourse.

*Off-site detention basin.* A feature or structure for temporarily storing excess stormwater originating at two (2) or more sites having devices for controlling the rate of release of the stored water, and located downstream of all sites where the runoff originates.

*100-year storm.* A rainstorm of varying duration and intensity having a one (1) percent probability of recurring in any one (1) year.

*On-site detention basin.* A feature or structure for temporarily storing excess stormwaters, having devices for controlling the rate of release of the stored waters, and located within the sites where the runoff originates.

*Overflow elevation.* A design elevation of a discharge structure at which point, or above which point, water leaks out, or bleeds out, through a control device down to the control elevation.

*Pass-through flow.* Off-site water that is allowed to move through a detention basin without being detained or included in the detention calculations.

*Peak flow.* The maximum rate of flow of water at a given point in a channel or conduit resulting from a predetermined storm or flood.

*Post-development conditions.* Those conditions which are expected to exist, or do exist, after alteration, resulting from human activity, of the natural topography, vegetation and rate, volume or direction of surface or subsurface flow.

*Predevelopment conditions.* Those conditions which exist at a site prior to any alteration of the natural topography, vegetation, flow rate, flow volume, or direction of surface or subsurface flow. In the case of a site where development has occurred in the past the predevelopment condition shall be the physical conditions of the site at the time of the application for the permit.

*Primary drainage (water management) systems.* Includes major waterways and appurtenant structures or systems whose total tributary area from origin to outfall exceeds or equals fifty (50) acres.

*Professional engineer or architect.* An engineer or architect duly registered or otherwise authorized by the state to practice engineering.

*Project site.* Any site where construction activity will result in land disturbance by means of filling, clearing, excavating and/or grading.

*Rational method.* An empirical formula for calculating peak rates of runoff resulting from rainfall. Expressed mathematically, the formula is:

$$Q = CIA$$

Where:

Q = Peak flow in cubic feet per second (cfs)

C = Runoff coefficient or fraction of runoff to rainfall, dependent on type of surface cover and topography

I = Rainfall intensity, in inches per hour, for a specific storm and duration

A = Watershed area in acres

*Receiving bodies of water.* Any water body or stream into which surface waters flow.

*Sedimentation.* The process by which suspended solids from erosion are transported and deposited.

*Site plan.* The plan, usually in map form, prepared pursuant to the city council's zoning or other land development ordinances as a requirement for the development of property.

*Stormwater pollution prevention plan (SWPPP).* A plan developed by a qualified professional engineer or person certified in erosion and sediment control to establish controls to limit erosion and transport of sediment and other pollutants from a project site. The plan shall include the use of best management practices.

*Stormwater runoff.* The waters derived from rain falling or snow melting within a tributary drainage basin, flowing over the surface of the ground or collected in a stormwater drainage system, storm sewer or watercourse.

*Subdivision.* As defined in chapter 25 of this Code.

*Time of concentration.* The elapsed time for stormwater to flow from the most distant point in a drainage basin to the outlet or point in question.

*Twenty-five-year storm.* A rainstorm of varying duration and intensity having a four (4) percent probability of being equaled or exceeded in any given year.

*Watercourse.* Any stream, creek, brook, branch, natural or artificial depression, slough, gulch, reservoir, lake, pond or natural or manmade drainageway in or into which stormwater runoff and floodwaters flow either regularly or intermittently.

*Watershed.*

(a) An area of land that drains down slope to a lowest point. Water shed boundaries follow major ridgelines around channels and meet at the bottom, where water flows out of the watershed, a point commonly referred to as a channel, stream, creek, or river.

(b) A region or area bounded peripherally by a topographic divide and draining ultimately to a particular watercourse or body of water.

(Ord. No. 4253, § 1, 8-15-11)

## Sec. 23-2. Purpose.

The purpose of this chapter is to lessen or avoid hazards to persons and property caused by uncontrolled stormwater runoff or by obstructions to drainage and to lessen the degradation of the quality of surface runoff.

(Ord. No. 4253, § 1, 8-15-11)

## Sec. 23-3. Applicability.

(1) Any person or government entity within the city shall apply to the city manager or his designee for approval of a stormwater management plan and obtain a permit before commencing any development or development activity.

(2) A stormwater management plan shall be required of any platted subdivision for which no improvement plans have been submitted at the time this chapter takes effect.

(Ord. No. 4253, § 1, 8-15-11)

## Sec. 23-4. Exemptions.

(1) Development within a subdivision shall not require approval of a stormwater management plan if each of the following conditions have been met:

(a) Drainage provisions for the project were previously approved and remain valid as part of a final plat.

(b) The development is conducted in substantial accordance with the stormwater management provisions contained in the development plan submitted with the final plat as approved.

(2) Development on isolated lots for single-family and two-family dwelling purposes shall not require approval of a separate stormwater management plan, nor a grading permit, unless the development involves altering, rerouting, deepening, widening, obstructing or changing in any way existing drainage facilities, degrades the quality of water, adversely affects any wetland or adversely affects any sinkhole, watercourse or waterbody; or unless said lot is five (5) acres or more in size. Also, in order to qualify for exemption the lot must provide the following protection:

(a) Waste and material disposal. All waste and unused building materials (including garbage, debris, cleaning wastes, wastewater, toxic materials, or hazardous materials) shall be properly disposed of and not allowed to go offsite or in storm sewers.

(b) Tracking. Each site shall have graveled roads, access drives and parking areas of sufficient width and length to prevent sediment from being tracked onto public or private roadways. Any sediment reaching a public or private road shall be removed by street cleaning (not flushing) by those responsible before the end of each workday.

(c) All excavations, grading, or filling shall have a finished grade not to exceed three to one (3:1).

(d) Sediment shall be controlled and contained on site.

(e) For vacant land held for development, grass and other vegetative ground cover is required.

(f) All erosion control measures must be installed before land disturbing activity can take place and shall be installed according to the city engineer's standard details.

(g) Disturbed areas which are at a finished grade with installed utilities shall be permanently seeded and mulched or sodded within seven (7) days.

(h) Single-family lots that remain inactive for fourteen (14) days or more shall be established with temporary vegetation. This requirement may be waived if the landowner has sold the lot and construction activity is scheduled to begin within thirty (30) days of being sold.

(i) Slopes that are steeper than five to one (5:1) which are disturbed and are at final grade with installed utilities shall be covered immediately with seeding, mulch, or other covering appropriate for the season.

(3) Stormwater management plans may be waived for building construction or other development which will not adversely impact an existing drainage area or drainage on adjoining properties.

(4) Written notice of intent to commence development shall be delivered to the city manager or his designee prior to undertaking any development activity, whether exempt from plan provisions or not. Application for a building permit may constitute notice of intent.

(Ord. No. 4253, § 1, 8-15-11)

## Sec. 23-5. Stormwater management plan application.

(1) *Purpose.* The purpose of the stormwater management plan review process is to provide an organized framework for evaluating and acting upon proposals for development as they can relate to stormwater management issues.

(2) *Required information.* It is the responsibility of an applicant to include sufficient information in the stormwater management plan to enable evaluation of the environmental quality of the affected area, the potential and predicted impacts of the proposed activity on affected waters, and the effectiveness and acceptability of the measures proposed by the applicant for preventing or reducing adverse impacts. Adverse impacts would include any reduction in water quality of stormwater runoff leaving the project site. The applicant shall furnish the city manager or his designee the stormwater management plan application form and stormwater management plan, sealed by a professional engineer or architect registered in the state or by a CPESC. The applicant shall include as part of the stormwater management plan a stormwater pollution prevention plan (SWPPP) for the project site. The SWPPP shall describe methods and BMPs proposed to maintain acceptable water quality for runoff water leaving the site.

(3) It is required that the owner/developer, or their agent, meet with the city manager or his designee to discuss the proposed development and the stormwater management aspects of the proposed development during the conceptual layout stage of the project.

(4) The application form required the following minimum information:

   (a) The name, address and telephone number of the applicant, and the owner if different from the applicant.

   (b) Name and address of the professional engineer, architect or CPESC.

   (c) The legal description of the property.

(5) An application for stormwater permit shall be deemed abandoned one hundred eighty (180) days after the date of filing, unless an extension has been requested in writing or a permit has been issued.

(Ord. No. 4253, § 1, 8-15-11; Ord. No. 4404, art. 1, 12-17-12)

## Sec. 23-6. Stormwater management plan.

A stormwater management plan, including the SWPPP, is to be designed to safely manage the stormwater runoff for quantity and quality during and after construction. The plan shall be designed to manage the quality of stormwater runoff during development through erosion and sedimentation controls and after development through post construction design elements. The SWPPP is to be prepared and sealed by a professional engineer licensed in the State of Missouri or a CPESC. The plan shall provide or be accompanied by maps at a minimum scale of one (1) inch is less than or equal to two hundred (200) feet and other descriptive material, including the basis of computation, showing the following:

(1) Required predevelopment site information (map scales are minimums):

   a. Detailed location sketch showing the parcel and major adjacent roads.

   b. Topographic map of the site at a scale of one (1) inch is less than or equal to two hundred (200) feet with maximum five-foot contour intervals, except in floodplains or other areas of low relief where a smaller interval may be required.

   c. Where percolation or exfiltration systems are proposed, information as to the location and type of vegetative cover and soil types and characteristics representative of the design condition mapped at a scale of one (1) inch is less than or equal to two hundred (200) feet.

d. Location of streams and other floodwater runoff channels, their normal channels, and the extent of the floodplains at the established high water elevations, and the limits of the floodway mapped at a scale of one (1) inch is less than or equal to two hundred (200) feet.

e. Location of lakes, ponds, swamps and detention basins indicating their normal shorelines, floodplains and lines of inflow and outflow mapped at a scale of one (1) inch is less than or equal to two hundred (200) feet.

f. Location of farm drains, inlets and outfalls, storm sanitary and combined sewers and outfalls, septic tank systems and outlets, if any, and seeps, springs and flowing and other wells mapped at a scale of one (1) inch is less than or equal to two hundred (200) feet.

g. Location and description of nearby existing off-site water management facilities such as wells, lakes, drainageways, etc., which are potentially directly affected by the proposed construction or development, mapped at a scale of one (1) inch is less than or equal to two hundred (200) feet.

(2) For all existing drainage facilities which are to be maintained, altered, or enlarged as part of the stormwater management system; provide information as to their size, slopes, depths, outfalls, receiving waters, elevations, cross sections, profiles, construction materials and other design details as applicable.

(3) Location of all new stormwater facilities, including detention basins and post construction water quality elements, to be constructed. Design details for each facility shall be provided as applicable.

(4) Location and extent of existing and proposed impervious surfaces (roads, parking lots, buildings, etc.) and their elevations. Provide grading and paving plans and specifications.

(5) Location and extent of rights-of-way and easements for the stormwater management system, including all areas to be dedicated for water management purposes.

(6) Identification and description of any special or required maintenance procedures to keep the project functioning as designed.

(7) Provide stormwater management system design calculations as follows:

a. Design storms used.

b. For all detention basins, a plot or tabulation of storage volumes with corresponding water surface elevations and of the basin outflow rates for those water surface elevations.

c. Acreages and percentage of property proposed as:

1. Impervious surfaces.

2. Pervious surfaces (green areas).

3. Lakes, canals, detention areas, etc.

4. Total acreage of project.

5. Other.

d. Runoff routing calculation showing discharge, elevations, and volumes retained and/or detained during applicable storm event.

e. Calculations required for determination of minimum building floor and road elevations.

f. Calculations for all inlets, pipes, and ditches shall be submitted for review.

(8) For projects less than one (1) acre, provide a narrative section that describes potential sources of pollution, project managers for the project and areas over which they have control, temporary and permanent nonstructural BMPs, temporary and permanent structural BMPs, additional site

BMPs as warranted by the site, BMP implementation schedule, temporary stabilization practices, dewatering methods, permanent stabilization practices, measures to minimize dust, construction/waste materials to be stored on site and how they will be disposed, pollutant sources from other areas than construction, allowable sources of nonstormwater discharge, how mud/sediment on streets or other property will be handled, how accumulated sediment will be disposed, and implementation of pollution prevention measures for nonstormwater discharges.

(9) For projects one (1) acre or greater, provide two (2) bound copies of the SWPPP based on the EPA SWPPP template. Required information includes identifying contact information for responsible parties; site evaluation, assessment and planning; documentation of compliance with other federal requirements; erosion and sediment controls; pollution prevention standards; and inspection and corrective action.

(10) Describe operation and maintenance procedures for stormwater management facilities, i.e., cleaning frequency, access routes, any special equipment or tools to be used. This should include procedures for transfer of maintenance responsibilities where appropriate.

(11) Identify entity responsible for operation and maintenance of the erosion and sediment control system after completion of site activities.

(12) The requirements for specific plan elements cited above may be waived by the city manager or his designee, upon written supportive recommendation of the city engineer. The stormwater management plan for minor development activities may consist of a certification from a professional engineer, architect or CPESC that the differential runoff equals zero (0). However, the developer shall still provide a completed application, the required review fee and SWPPP for the project site.

(13) The city manager or his designee will ascertain the completeness of the stormwater management plan application. The city manager or his designee will return incomplete applications to the applicant for completion and resubmission. After determining that the application is complete, the city manager or his designee will distribute copies of the application for review and comment to other persons with special technical expertise as deemed appropriate. Within a reasonable period after submission of the completed stormwater management plan application by the applicant, the city manager or his designee shall approve, approve with specified conditions, or deny the application and shall notify the applicant accordingly. If the stormwater management plan application is denied or approved with conditions, the city manager or his designee shall state the reasons for denial or the specified conditions. If the applicant feels aggrieved due to the denial or conditions, he may appeal the decision to the city council.

(14) Once the SWPPP is approved, a copy of it shall be kept at the construction site at all times. The SWPPP shall be updated according to progress of the work that disturbs the soil. Typically this update will be done weekly. It will be the contractor's responsibility to provide the means of storing the SWPPP on site.

(15) A stormwater management permit shall be valid for three (3) years after the date of issuance. If the stormwater management facilities for which the permit was issued are not completed within three (3) years, the permittee may request a renewal of the said permit. The permit renewal fee must be paid in full at the time of the renewal request. The permit renewal fees are outlined on the city fee schedule. The city manager or his designee has the right to approve or deny any permit renewal request.

(Ord. No. 4253, § 1, 8-15-11; Ord. No. 4404, arts. 2, 3, 12-17-12)

## Sec. 23-7. Project classification and fees.

(1) For purposes of evaluation, projects will be classified in three (3) categories according to acreage:

*Class*

(a) Less than twenty-five (25) acres.

(b) Twenty-five (25) acres to two hundred (200) acres.

(c) Over two hundred (200) acres.

(2) The effective acreage for a project is not limited to a fractional part of the total concept, rather if a project is developed in phases or small plots, the total acreage of the conceptual project will be considered.

(3) The review fee shall be collected at the time the stormwater management plan application is submitted by the applicant to the city manager or his designee, and will reflect the cost of the administration and management of the review process. The fees for the project classes are outlined on the city fee schedule.

(Ord. No. 4253, § 1, 8-15-11)

## Sec. 23-8. General design requirements for stormwater management plan and SWPPP.

(1) A stormwater management system shall be provided for protecting lots, roads, streets and buildings in the project area from the potential adverse impacts of stormwater runoff. Streets, blocks, depths of lots, parks and other public grounds, and ultimate land usage shall be determined, located and laid out in such a manner as to reduce the velocity of overland flow and allow the maximum opportunity for infiltration of stormwaters into the ground, and to preserve and utilize natural streams, channels and detention basins, and wherever possible, to include streams and floodplains within parks or other public grounds. The elements of the stormwater management plan should protect area waterways from pollutants carried by the stormwater runoff.

(2) The maximum allowable release rate of stormwater after development shall be as follows:

(a) The rate shall not exceed the before-development rate for a two-year and ten-year frequency storm.

(b) The twenty-five-year storm shall have the release rate of a fifteen-year frequency storm.

(c) The total drainage area must be used in calculating the allowable release rate. The required storage volume will be based on the project area only, with extraneous flows from upland areas being pass-through flow or discharged via overflow spillway or other devices.

(d) The runoff from a one-inch rain event shall be controlled to provide water quality improvement. This is approximately the ninetieth percentile rain event.

(3) The increased stormwater runoff resulting from the proposed development shall be detained on-site by appropriate detention basins or by other acceptable techniques. The minimum volume of storage shall be sufficient to store the volume from a twenty-five-year storm (under developed conditions). Control devices shall limit the discharge from storage to a rate no greater than that prescribed by this chapter. Downstream property, watercourses, channels or conduits shall not receive stormwater runoff from proposed development at a higher peak flow rate than that which existed prior to the development. Detention/retention areas should at a minimum filter the stormwater runoff. When possible, filtration and/or infiltration practices should be incorporated into the site design.

(a) Where a development site has more than one (1) watershed, the runoff water shall be controlled within each watershed. Exemption from this requirement must be approved by the city manager

or his designee. With a request for this exemption, the developer will be required to present information and/or documentation establishing conclusively that no adverse impacts would occur to adjoining or downstream properties from uncontrolled runoff in a particular watershed area of the development site.

(4) Generally acceptable locations of the stormwater runoff channels in the design of the project area may include the following:

(a) In a depressed median of a double roadway, street or parkway, provided the median is wide enough to permit required roadway shoulders.

(b) Centered on the rear lot lines in a block, or entirely within the rear yards of a single row of lots or parcels, provided that in either case the lots are deep enough to permit side slopes in the runoff channel and a building site of the elevation required by other sections of this chapter.

(c) In a depressed area along roadway, street or parkway, provided the area is wide enough to permit side slopes as required in other sections of this chapter.

(d) Landscaped areas may be designed for use as part of the stormwater management system.

(e) Alternative systems such as curb and gutter and storm sewers that discharge into an appropriate detention basin may be incorporated into the stormwater management plan.

(f) The smaller, uppermost reaches of drainage channels and swales forming the natural drainage system near a watershed divide may be relocated or eliminated and incorporated into the planned system of storm sewers and open channels designed consistent with the requirements of this chapter.

(5) A continuous easement may be provided abutting rear lot lines as shown in the stormwater management plan within which utility lines and open drainage facilities may be located and maintained, but on which no accessory buildings may be constructed. The utility drainage easement shall be at least twenty (20) feet wide. Within the area so designed for the passage or storage of waters, no structure may be erected, no fences, shrubbery or trees planted, or changes made to the prescribed grades and contours of the specified floodwater or stormwater runoff channels.

(6) All storm sewer outfalls shall be so designed, by reason of elevation of the invert, by a flap gate or by other features, that when the receiving stream is in full flood, the storm sewers will continue to drain the areas they are designed to serve unless the provision is made for sewer backups into planned storage locations.

(7) All sanitary sewer manholes constructed in a floodplain, in a street designed for detention, or in an area designed for the storage or passage of floodwater or stormwater, shall be provided with either a watertight bolted manhole cover, a watertight concealed pick-hole cover, or be constructed with a rim elevation at or above the high water elevation of the 100-year flood or the high water elevation of the design storm, whichever is applicable to the specific area.

(8) Projects that are to be developed in phases will normally require the submission of a master plan of the applicant's contiguous land holdings. Applications for individual project phases may be considered only when the phases are totally independent of, or make sufficient provisions for, adjacent lands.

(9) All excavations, grading or filling shall have a finished grade not to exceed a 3:1 (three (3) horizontal to one (1) vertical) slope. Steeper grades may be approved the city engineer if the excavation is through rock or the excavation or fill is protected {a designed head wall or toe wall may be required). Retaining walls that exceed a height of four (4) feet shall require the construction of safety guards identified in the building code identified in section 7-27 and subsequent amendments thereto. Permanent safety guards will be constructed in accordance with the building code identified in chapter 7 and subsequent amendments thereto.

(10) Grading plans for sites that exceed one (1) acre shall provide for erosion control and for sediment controls, or debris basins, silt traps or filters, staked straw bales, a combination of these measures or other measures approved by the city engineer to remove sediment from runoff waters. Temporary sediment control measures (structural) shall be maintained until vegetative cover is established at a sufficient density to provide erosion control on the site.

(11) Where natural vegetation is removed during grading, vegetation shall be reestablished in such a density as to prevent erosion. Permanent type grasses shall be established as soon as possible during the next seeding period after grading has been completed. Trees, plants and vegetative cover should be of native species, when possible. Reference the city development manual and other city ordinances for examples.

(12) When grading operations are completed or suspended for more than fourteen (14) days between permanent grass seeding periods, temporary cover shall be provided. All finished grades (areas not to be disturbed by future improvements) 4:1 slopes or steeper shall be sodded, hydro seeded, or have erosion control fabric installed; slopes less than 4:1 (four (4) horizontal to one (1) vertical) shall be mulched at the rate of one hundred (100) pounds per one thousand (1,000) square feet when seeded.

(13) Ground adjoining project sites (lots) shall be provided with protection from accelerated and increased surface water, silt from erosion, and any other consequences of erosion. Runoff water from developed areas (parking lots, paved sites, and buildings) above the area to be developed shall be directed to diversions, detention basins, concrete gutters, and/or underground outlet systems. Sufficiently anchored straw bales may be substituted with the approval of the city engineer.

(14) Development along natural watercourses shall have a minimum fifty-foot general maintenance and drainage easement. The easement shall be measured from the top of the existing stream bank. Development shall not encroach on said fifty-foot easement. The watercourse shall be maintained by and be made the responsibility of the appropriate legal entity. Permanent vegetation should be left intact. Variances will include designed stream bank erosion control measures and shall be approved by the city engineer. FEMA guidelines shall be followed where applicable regarding site development in floodplains.

(15) All lots shall be seeded and mulched or sodded before an occupancy permit shall be issued.

(16) BMPs for post construction water quality improvement are to be used when feasible. Designers are encouraged to implement cooperative use of required landscaping areas and stormwater quality measures. Examples of these BMPs are located in the city standards and specifications.

(Ord. No. 4253, § 1, 8-15-11; Ord. No. 4404, arts. 4—6, 12-17-12)

## Sec. 23-9. Hydraulic design considerations.

(1) Stormwater systems will be designed with sufficient hydraulic capacity as a minimum for the following frequencies and durations:

| | Type of Facility | Design Frequency |
|---|---|---|
| (a) | Detention basins | 25-year |
| (b) | Primary drainage systems | 25-year |

| | | |
|---|---|---|
| (c) | Bridges | 50-year |
| (d) | Secondary drainage systems, i.e., crossdrains and ditches for internal subdivision drainage | 15-year |

(2) The city manager or his designee may require alternative designs or features to reduce the cost of long-term maintenance.

(3) In critical areas, the city manager or his designee may require additional hydraulic capacity above the minimums set forth above, up to the 100-year frequency design.

(4) The city manager or his designee may require a developer to improve the stormwater facilities immediately upstream or downstream of a development if adverse impacts from said development are foreseen. The developer will be responsible for all costs associated with the improvements.

(Ord. No. 4253, § 1, 8-15-11)

## Sec. 23-10. Stormwater management system design requirements.

(1) *Calculations.* The design of the stormwater system shall be in accordance with the City of Cape Girardeau's Storm Drainage Design Manual (if available). If not available, the development calculations shall be based on the minimum of one (1) fifteen-minute rainfall using the following:

| Watershed Area (acres) | Method |
|---|---|
| 0—25 | Rational (See Note 1) |
| >25 | Technical Release 55 (TR-55) (See Note 2) |

Note 1: Rational Method shall be as identified in Missouri Department of Transportation Design Manual Chapter IX - Hydraulics and Drainage current edition.

Note 2: Technical Release 55 (TR-55) shall be as identified in the NRCS Urban Hydrology for Small Water Sheds.

(2) *Open channels.*

(a) Open channels, natural or improved, may be placed at the rear or side of properties upon approval of the city engineer where the design provides adequate protection to the existing and future property and structures. Such protection shall be through the provision of a fifty-year floodplain setback and a minimum distance from the toe of bank to the setback of fifty (50) feet. This drainage setback line shall be shown on the final plat. Permanent vegetation, existing

ground elevation, and grades within the fifty-foot setback area shall be left intact and undisturbed on channels with watersheds of one hundred (100) acres or more unless modification is approved in writing by the director or his designee.

(b) Area inlets shall be required behind the curbs to intercept overland flows greater than one (1) cfs to prevent flows from crossing sidewalks and/or curbs.

(3) *Inlets and junction boxes.* Inlets, junctions boxes and inlet spacing shall be per the city's standard details and as approved by the city engineer. When locating inlets in sump locations consideration must be made with respect to the major drainage system. A 100-year design event shall not cause buildings to flood in the event that a single inlet becomes blocked. In new developments the 100-year design storm elevation shall be mapped on the final plat as a building setback. Overland relief to another inlet or surface channel shall be provided to protect property.

(4) *Enclosed systems.*

(a) The outlet of an enclosed system shall have sufficient energy dissipation provided to negate the increases posed by development as approved by the city engineer.

(b) Building gutter drainage systems may not be discharged directly into the city's enclosed system.

(c) If development plans call for the enclosure of an existing, natural drainageway which carries greater than fifty (50) cfs during the design storm event, the enclosure shall be sized for a fifty-year twenty-minute storm event. Upstream inundation shall be checked. Where inundation extends beyond the site property line and exceeds the design water surface elevation of the natural drainway/channel, a backwater ponding easement from the affected off-site property owner(s) shall be required prior to final plan approval. A reduction in the design storm requirement may be granted by the city engineer when existing off-site, downstream storm sewer would be smaller than the required on-site, upstream sewer and the downstream storm sewer are not designed to intercept/pass the fifty-year twenty-minute storm event.

(5) *Detention design criteria.* Detention in the overall system, including swales, lakes, canals, greenways, etc., shall be provided as follows.

(6) *General.*

(a) *Storage volumes.* The minimum volume of storage provided in detention basins, together with such storage as may be authorized in other on-site facilities, shall be sufficient to store the volume from a twenty-five-year storm (under developed conditions).

(b) *Outlet control structures.* Outlet control structures shall be designed to operate simply and automatically. They will limit discharges into existing or planned downstream channels or conduits so as not to exceed predetermined maximum authorized peak flow rates.

(c) *Release rate.* A release rate shall be calculated for a two-, ten-, or twenty-five-year storm for the proposed development in the condition prior to the proposed development.

(d) *Emergency spillway.* Emergency overflow facilities must be provided in all instances so that stored waters will not exceed the safe capacity of the basin. At a minimum, the emergency spillway must be able to pass without damage the 100-year storm.

(e) *Appearance.* Designs should result in aesthetically pleasing configurations which will enhance public acceptability.

(7) *Dry-detention facilities.*

(a) Perimeter maintenance easements of twenty (20) feet (minimum) width at slopes no steeper than three to one (3:1) (horizontal to vertical) shall be provided.

(b) Side slopes of the facility shall not be steeper than three to one (3:1) (horizontal to vertical).

(c) Provisions must be incorporated to facilitate complete interior drainage to dry bottom basins, to include the provision of natural grades to outlet structures, longitudinal and transverse grades to perimeter drainage facilities, or the installation of subsurface drains.

(d) Multipurpose features may be designed to serve secondary purposes for recreation, open space or other types of use which will not be adversely affected by occasional or intermittent flooding.

(e) In no case shall the limits of maximum ponding elevation be closer than twenty-five (25) feet horizontally from any building and less than two (2) feet vertically below the lowest sill elevation. The entire reservoir area shall be seeded, fertilized and mulched, sodded or paved.

(f) Fully paved low flow channels are prohibited. The flow channel for low flow events shall be reinforced turf or open sectioned pavers with grass or aggregate to allow filtering of the stormwater and to support mowing equipment. Other methods may be used as approved.

(8) *Wet-detention facilities.*

(a) Perimeter maintenance and operation easements of twenty (20) feet (minimum preferable) width at slopes no steeper than three to one (3:1) (horizontal to vertical) shall be provided.

(b) Control elevations should be no higher than two and one-half (2½) feet below the minimum road centerline elevation in the area served by the control device in order to protect the road subgrade when structures are constructed near roads.

(c) Side slopes shall not be steeper than three to one (3:1) (horizontal to vertical) out to a depth of two (2) feet below the control elevation, then as steep as soils stability will allow.

(d) If fish are to be used to help keep the basin clean, at least one-quarter (¼) of an area of the permanent pool must be a minimum depth of ten (10) feet.

(e) For emergency purposes, cleaning or shoreline maintenance, facilities shall be provided or plans prepared for the use of auxiliary equipment to permit emptying and drainage.

(f) The limits of maximum ponding elevations are to be no closer than thirty (30) feet horizontally from any building and no less than two (2) feet below the lowest sill elevation of any building.

(9) *Underground storage.* All or a portion of the detention storage may also be provided for in underground facilities, as long as all applicable requirements of this chapter are met. Details of such designs are to include type of facility, depth and volume of storage, details of inlet and outlet devices and locations, emergency overflow provisions, and measures to be used for surface water and groundwater pollution control.

(10) *Design alternatives.* The above listing of design criteria is not intended to preclude the use of other known state-of-the art methods and available best management practices and should not be construed as a mechanism to discourage innovative design concepts.

(11) *Developments adjoining a floodplain.* Where a development adjoins or encompasses a portion of a floodplain for a 100-year flood, the following shall apply:

(a) The applicant shall show the floodplain and floodway on the stormwater management plan.

(b) The applicant shall include in the stormwater management plan all other plans, plats, specifications, etc., required by federal, state, county and/or municipal laws or regulations detailing such provisions or restrictions as are necessary to comply with the following:

1. All applicable zoning and subdivision requirements.

2. All applicable building code requirements.

3. All requirements of other federal, state or local agencies exercising jurisdiction over the area.

(12) *Channel flow* The applicant shall not alter any channel in such a way that would prohibit any section of the channel from conveying, in its post-development state, the same amount of flow at the same or lower maximum water elevation that it conveyed in its predevelopment state.

(13) *Modifications of channel.* The applicant shall furnish, for the city manager's or his designee's review and approval, the following information pertaining to proposed channel modifications:

(a) Typical cross sections of the existing and proposed channel.

(b) Plan view of the channel showing the location of existing constructions, obstructions and other nontypical areas.

(c) Hydrographs and/or flood routing calculations and backwater curve profiles of the proposed waterway corresponding to a storm recurrence interval of one hundred (100) years.

(d) Engineering evaluation of all potential increases in flood hazards to the adjacent upstream or downstream private or public lands and facilities located thereon, showing provisions for eliminating any and all adverse impacts on such land and facilities at no public cost.

(e) Minimum finished floor elevations which shall be set at or above the maximum water surface elevation as determined by either or both of the following:

1. "Flood Insurance Rate Map" published by the Federal Emergency Management Agency.

2. Backwater curve profiles of the proposed waterway due to a 100-year storm recurrence interval.

(f) Designation on the final plan of all areas reserved for flood routing, detention or storage, together with the required wording pertaining to restrictions, dedications and maintenance responsibilities of such areas.

(14) *Detention storage.* If detention storage is provided within a floodplain, only the net increase in storage volume above that which naturally existed on the floodplain shall be credited to the development. No credit will be granted for volumes below the elevation of the regulatory flood at that location unless compensatory storage is also provided.

(15) *Verification of adequacy.* Analysis of all elements of design is to be verified by the engineer of record submitting the plan. The following outline is provided to ascertain that certain critical elements are in workable compliance with the aims of this chapter. For projects less than fifty (50) acres in area there is no need for submittal of routing calculations or tabulated proof of adequacy of tributary runoff for detention; however, it is recommended that verification be made of:

(a) Volume of detention for the total project.

(b) Tributary (Q) peak runoff to basin.

(c) Balanced maximum outflow rate from the low-flow structure.

(d) Ratios of inflow to outflow rates.

(e) Sizing of the overflow facilities.

(f) Stability of detention dikes.

(g) Safety features.

(h) Maintenance features.

For projects of fifty (50) acres or greater but less than two hundred (200), routing calculations shall be submitted in legible tabulated form. Proof of adequacy of volume of detention and sizing computations for low-flow structure shall also be submitted. Features of stability and safety may also need to be documented if the scope of the project requires special attention in this area of design.

Projects over two hundred (200) acres in area shall provide documented verification of adequacy according to scope and complexity of design.

(16) *Installation of stormwater runoff control measures.* Positive stormwater runoff control shall be provided for during development. Stormwater management plans shall include a schedule for the installation, construction or modification of all drainage facilities. Erosion control measures and a schedule for their installation shall be shown on the stormwater management plan. Installation of drainage facilities and erosion control measures shall proceed as scheduled in the approved stormwater management plan.

(17) *Erosion and sedimentation control criteria.* The best management practices to control the occurrence of erosion and sedimentation are to be incorporated into the plan for the time land is disturbed by development activity. Permanent controls and practices shall also be identified where they are necessary to control an ongoing potential for erosion and sedimentation. Types of best management practices include, but are not limited to:

(a) Use of state approved standard specifications of the city.

(b) Tree, topsoil and vegetative cover preservation and restoration.

(c) Surface stabilization with various natural or manmade materials.

(d) Runoff control measures that address quantity and quality of runoff waters such as berms, dikes, sediment traps, filtration and infiltration methods and barriers.

(e) Inlet and outlet protection.

(f) Stream bank protection.

(g) Scheduling of development activities and protection measures for minimal impact.

(h) For post construction water quality controls, landscaped areas may be used.

(Ord. No. 4253, § 1, 8-15-11)

## Sec. 23-11. Rights-of-way and easements.

(1) All stormwater management facilities shall be constructed within an easement or right-of-way dedicated for stormwater management use and connected to a public road or other location from which operation and maintenance is legally available. Minimum rights-of-way and maintenance easements shall be provided by instrument or plat dedication for all waterways used to convey or detain runoff. Where permanent maintenance will be provided by the property owner, maintenance easements or rights-of-way may not be required. The minimum widths of rights-of-way and easements shall be as follows:

| Facility | Maintenance Access Width |
|---|---|
| Open drainage channel or facility | 50 feet from top of bank |
| Greenways | Width of greenway |
| Pipes and culverts | 20 feet centered |

| | |
|---|---|
| Detention areas | 20 feet continuous around total area |
| Connecting access | 20 feet |

(2) Easements must include the "top of the bank width" and the maintenance access width.

(3) The maintenance access width begins at the point of the bank or slope of the facility.

(4) Additional maintenance access width may be required by the city manager or his designee in special circumstances where more width on one (1) or both sides is necessary for maintenance purposes.

(Ord. No. 4253, § 1, 8-15-11)

## Sec. 23-12. Maintenance responsibilities for stormwater management facilities.

(1) *Purpose.* The purpose of this section is to establish maintenance standards to ensure that after stormwater management facilities have been properly designed and constructed, they continue to function properly. Continued proper functioning is highly dependent upon the proper maintenance of the facilities. Proper long term function is critical to maintaining the water quality improvement aspects of the stormwater management facilities.

(2) *Design of facilities.* Maintenance costs over a period of years will generally surpass the costs of initially constructing water management facilities. The applicant and the city manager or his designee should utilize all appropriate methods, approaches and techniques to design and construct these facilities in such a manner that fulfills the requirements of this chapter, facilitates their inspection, facilitates cleaning and repair activities, and minimizes future maintenance costs. The design should include provisions for access to areas requiring cleaning and/or maintenance work after the project is constructed.

(3) *Inspection of facilities.* Inspection of stormwater management facilities should be performed annually, at a minimum. The owner is responsible to have the inspection performed by a competent individual or firm. A written report of the inspection, including findings and recommendations, is to be sent to the city manager or his designee. When cleaning or repairs are recommended, the owner shall send a subsequent report to the city manager or his designee documenting that the recommended action has been completed. The city manager or his designee has the authority to inspect all stormwater facilities on public or private property to confirm proper maintenance is being performed. Enforcement shall follow the guidelines set forth in this chapter.

(4) *Maintenance responsibilities.* The growth of noxious weeds, the creation of conditions which support the growth of mosquitoes and other insects, and the decrease in available storage by accumulated sediments shall be controlled. The cleanup of accumulated debris, flotsam and other materials after runoff events have subsided shall be assured.

(a) Detention facilities, when mandatory, are to be built in conjunction with the storm sewer installation and/or grading. Since these facilities are intended to control increased runoff, they must be partially or fully operational soon after the clearing of the vegetation. Silt and debris connected with early construction shall be removed periodically from the detention area and control structure in order to maintain close to full storage capacity.

(b) The responsibility for maintenance of stormwater management facilities in single-lot development projects shall remain with the owner, developer and general contractor until final inspection of the development is performed and approved, and a legal occupancy permit, where

applicable, is issued. After legal occupancy of the project, the maintenance of stormwater management facilities shall be vested with the owner of the project.

(c) The responsibility for maintenance of stormwater management facilities in subdivision projects shall remain with the developer until such time as responsibility is transferred, under appropriate legal arrangements, to the private individual owners in the subdivision, the trustees of the subdivision, the city or such other maintenance entity or authority as may be proposed and approved by the city council.

(d) If responsibility is to be transferred to the private individual owners in the subdivision, the developer shall assure perpetual maintenance of the drainage management facilities, including detention systems, if any are included, through the adoption of maintenance agreements or covenants for any facilities that remain in private ownership. Such agreements or covenants shall be subject to the approval of the city manager or his designee.

(e) If the responsibility is to be transferred to the trustees of the subdivision, the developer shall establish a suitable indenture of trust. Upon release of escrows required for the subdivision development, the responsibility for maintenance shall be vested in the trustees of the subdivision by virtue of the trust indenture. The indenture of trust shall clearly indicate resident responsibility for maintenance and shall be subject to the approval of the city manager or his designee.

(5) *Performance and maintenance security.* Security against defects in workmanship shall be required for any portion of the drainage management facilities dedicated to the public. The terms of the performance security shall apply to any repairs needed and maintenance needed during the two-year period following completion. Inspection and repair of defects shall be required as a condition of release of the posted security.

(Ord. No. 4253, § 1, 8-15-11)

## Sec. 23-13. Illicit discharges.

(1) *Prohibition of illicit discharges.*

(a) Pursuant to the National Pollutant Discharge Elimination System (NPDES) municipal separate storm sewer system (MS4) program illicit discharges to the MS4 are being defined as illegal. This is accomplished by identifying allowable nonstormwater discharges into the MS4 in the best interest of the City of Cape Girardeau, Missouri.

(b) Nonstormwater discharge means any discharge to the MS4, that is not rainwater or snow/ice melt. Except as hereinafter provided, all nonstormwater discharges into the MS4 are prohibited and declared to be unlawful. Common pollutants in the area served by the City of Cape Girardeau MS4 are, but not limited to, the following. Discharge of these items into the city stormwater system is prohibited:

Petroleum products, including, but not limited to, oil, gasoline, diesel fuel and grease.

Fats, oils and grease.

Paints.

Process water from industrial or domestic operations.

Chemicals, including household type products.

Solid waste.

Pet waste.

Phosphates and soaps.

Pesticides, fertilizers and herbicides.

Solvents and degreasers.

Sanitary sewage.

Antifreeze and other automotive products.

Chemically treated cooling water.

Yard waste including trees and parts of trees.

Any discharge causing interference in the MS4.

(2) *Allowable nonstormwater discharges.* Unless the City of Cape Girardeau, MoDNR, EPA or other regulatory agency has identified them as a source of pollutants to the waters of the State of Missouri, the following nonstormwater discharges into the municipal separate storm sewer system are lawful:

Water line flushing or other potable water sources.

Landscape irrigation or lawn watering with potable water.

Diverted stream flows.

Rising groundwater.

Groundwater infiltration to storm drains.

Pumped groundwater.

Foundation or footing drains.

Crawl space pumps.

Air conditioning condensation.

Springs.

Noncommercial washing of vehicles.

Natural riparian habitat or wetland flows.

Swimming pools (if dechlorinated).

Firefighting activities.

Discharges specified in writing by the City of Cape Girardeau as being necessary to protect public health and safety.

Waters used to wash vehicles and equipment, provided that there is no discharge of soaps, solvents, or detergents used for such purposes.

Water used to control dust.

Routine external building wash down that does not use detergents.

Construction dewatering water that has been treated by an appropriate control.

(Ord. No. 4253, § 1, 8-15-11; Ord. No. 4404, art. 7, 12-17-12)

## Sec. 23-14. Plan adherence.

The applicant shall be required to adhere strictly to the stormwater management plan as approved. Any changes or amendments to the plan must be approved by the city manager or his designee in accordance with the procedures set forth in this chapter obtaining stormwater management plan approval. Enforcement officials shall be, and are herein, granted inspection rights and right-of-entry privileges in order to ensure compliance with the requirements of this chapter.

(Ord. No. 4253, § 1, 8-15-11)

## Sec. 23-15. Enforcement.

(1) *Approved projects.* The city manager or his designee shall carry out periodic inspections of the project site to ensure the applicant's compliance with this chapter. If it is determined that the project is not being carried out in accordance with the approved stormwater management plan, the city manager or his designee is authorized to enforce compliance through the following steps in this order:

(a) *Written notice.* Issue written notice to the applicant or owner, specifying the nature and location of the alleged noncompliance, with a description of the remedial actions necessary to bring the project into compliance within a reasonable specified time.

(b) *Stop work order.* If the remedial work identified in the written notice is not completed within the specified time issue a stop work order directing the applicant or owner to cease and desist all or any portion of the work which violates the provisions of this chapter.

(c) *Revocation of approval.* Should the applicant or owner not bring the project into compliance following receipt of the written notice and stop work order, he shall then be subject to immediate revocation of his stormwater management plan approval and to the penalties described in this chapter.

(d) *Appeal.* Any notice, order or revocation issued pursuant to subsection (a)(1), (a)(2) or (a)(3) above shall become final unless the person named therein requests, in writing, no later than ten (10) days after the date such notice, order or revocation is served, a hearing before the city council.

(2) *Unapproved projects.* With respect to any development or development activity determined by the city manager or his designee to be subject to this chapter, and being carried out without approval, the city manager or his designee is authorized to enforce compliance through he following steps in this order:

(a) *Written notice.* Issue written notice to the owner specifying the nature and location of the alleged noncompliance, with a description of the remedial actions necessary to bring the project into compliance within a reasonable specified time.

(b) *Stop work order.* If the remedial work identified in the written notice is not completed within the specified time, issue a stop work order directing the owner to cease and desist all or any portion of the work which violates the provisions of this chapter.

(c) *Noncompliance with stop work order.* Should the owner not bring the project into compliance with the written notice and stop work order he shall then be subject to the penalties described in this chapter.

(d) *Appeal.* Any notice, order or revocation issued pursuant to subsection (b)(1), (b)(2) or (b)(3) above shall become final unless the person named therein requests, in writing, no later than ten (10) days after the date such notice, order or revocation is served, a hearing before the city council.

(3) *Post-construction maintenance of stormwater facilities.* The city manager or his designee shall carry out periodic inspections of public and private stormwater management facilities to ensure compliance with the maintenance requirements of this chapter. If it is determined that proper maintenance is not being carried out in accordance with the approved stormwater management plan, the city manager or his designee is authorized to enforce compliance through the following steps in this order.

(a) *Written notice.* Issue written notice to the owner, specifying the nature and location of the alleged noncompliance, with a description of the remedial actions necessary to bring the stormwater management facility into compliance within a reasonable specified time.

(b) *Stop work order.* If the corrective action identified in the written notice is not completed within the specified time, issue a stop work order directing the applicant or owner to cease and desist all or any portion of the work which violates the provisions of this chapter, if applicable.

(c) If the corrective action identified in the written notice is not completed within the specified time, issue a summons through nuisance abatement. The summons shall set a time frame to complete the corrective action(s). Failure to comply with the summons shall lead to a court hearing before the city court.

(Ord. No. 4253, § 1, 8-15-11)

## Sec. 23-16. Penalties for violation.

(1) *General.* Violation of the provisions of this chapter or failure to comply with any of its requirements, including conditions and safeguards established in connection with variances or special use permits, shall constitute a misdemeanor. Any person who violates this chapter or fails to comply with any of its requirements shall upon conviction thereof be fined not more than five hundred dollars ($500.00) or imprisoned for not more than three (3) months, or both, and in addition, shall pay all costs and expenses involved in the case. Each day such violation continues shall be considered a separate offense.

(2) *Corrective actions.* Nothing herein contained shall prevent the City from taking such other lawful action as is necessary to prevent or remedy any violation. All such costs connected therewith shall accrue to the person responsible.

(Ord. No. 4253, § 1, 8-15-11)

## Sec. 23-17. Vested rights.

This chapter shall not in any way limit or modify the vested rights of any person to complete any development or improvement to lands based upon prior law, where a previous permit or authorization has been granted or applied for and where such previous permit or authorization remains in effect. The city may acknowledge vested rights in other circumstances where it is equitable and just.

(Ord. No. 4253, § 1, 8-15-11)

## Sec. 23-18. Conflict with other ordinances and codes.

In case of conflicts within this chapter or any part thereof, and the whole or part of any other existing or future ordinance or code of the city, the most restrictive in each case shall apply.

(Ord. No. 4253, § 1, 8-15-11)

### Sec. 23-19. Other permits.

(1) Before starting any work regulated by this chapter, an applicant shall comply with the requirements set forth in all other applicable ordinances with respect to the submission and approval of preliminary and final subdivision plats, site plans for construction and rezoning improvement plans, and building, grading and zoning permits, along with those set forth in this chapter and as may be required by state statutes and the regulations of any department of the state.

(2) A discharge permit from the State of Missouri shall be obtained individually or under the applicable general permit for any activity regulated under the Department of Natural Resources Clean Water Commission (10 CSR 20) Storm Water.

(Ord. No. 4253, § 1, 8-15-11)

### Sec. 23-20. Interpretation.

In the interpretation and application of this chapter, the provisions expressed herein shall be held to be the minimum requirements and shall be liberally construed in favor of the city and shall not be deemed a limitation or repeal of any other powers granted by state statutes.

(Ord. No. 4253, § 1, 8-15-11)

### Sec. 23-21. Abrogation and greater restrictions.

It is not intended by this chapter to repeal, abrogate or impair any existing easements, covenants or deed restrictions. However, where this chapter imposes greater restrictions, the provision of this chapter shall prevail.

(Ord. No. 4253, § 1, 8-15-11)

### Sec. 23-22. Liability disclaimer.

The performance standards and design criteria set forth herein establish minimum requirements which must be implemented with good engineering practice and workmanship. Use of the requirements contained herein shall not constitute a representation, guarantee, or warranty of any kind by the municipality or its officers and employees of the adequacy or safety of any drainage management structure or use of land. Nor shall the approval of a stormwater management plan and the issuance of a permit imply that land uses permitted will be free from damages caused by stormwater runoff. The degree of protection required by these regulations is considered reasonable for regulatory purposes and is based on historical records, engineering and scientific methods of study. Larger storms may occur or stormwater runoff heights may be increased by manmade or natural causes. Enforcement of these provisions, therefore, shall not create liability on the part of the municipality or any officer of the municipality with respect to any legislative or administrative decision lawfully made hereunder, nor shall compliance relieve an owner, developer, and/or permittee from responsibility under any circumstances where liability would otherwise exist.

(Ord. No. 4253, § 1, 8-15-11)

### Sec. 23-23. Final approval required.

(1) Any stormwater management facility for which a permit has been issued as a part of a subdivision improvement plan must be included with as-built drawings and certified to have been constructed accordingly.

(2) Any stormwater management facility for which a permit has been issued individually or as a part of a site development plan must be certified to have been constructed in conformance with the approved drawings prior to issuance of an occupancy permit.

(3) The certification in a. and b. above must be by a professional engineer licensed in Missouri or a CPESC.

(Ord. No. 4253, § 1, 8-15-11)

---

FOOTNOTE(S):

---

--- (**1**) ---

**Editor's note—** Article 1 of Ord. No. 4253, adopted Aug. 15, 2011, repealed ch. 23 in its entirety and enacted similar provisions to read as herein set out. Former ch. 23 derived from Ord. No. 675, adopted March 6, 1989; Ord. No. 798, adopted Dec. 18, 1989; Ord. No. 1240, adopted Sept. 21, 1992; Ord. No. 2310, adopted Jan. 5, 1998; Ord. No. 2827, adopted Dec. 18, 2000; and Ord. No. 3753, adopted Nov. 6, 2006. (Back)

**Cross reference—** Floodplain management regulations, ch. 12; streets and sidewalks, ch. 24; urban redevelopment, ch. 28; water and sewers, ch. 29; public works department, § 2-54. (Back)

# Chapter 24 STREETS AND SIDEWALKS [1]

ARTICLE I. - IN GENERAL

ARTICLE II. - TREES AND SHRUBS

ARTICLE III. - STREET MAINTENANCE DISTRICTS

ARTICLE IV. - CURBS AND DRIVEWAYS

ARTICLE V. - USE AND OCCUPANCY OF PUBLIC RIGHTS-OF-WAY

ARTICLE VI. - SIDEWALK USES—DEFINITIONS, STANDARDS AND CRITERIA

---

FOOTNOTE(S):

---

--- (**1**) ---

**Charter reference—** Public improvements and special assessments, § 11.07. (Back)

**Cross reference—** Administration, ch. 2; video service regulation, ch. 8; floodplain management regulations, ch. 12; public improvements and special assessments, ch. 21; stormwater management regulations, ch. 23; subdivision regulations, ch. 25; traffic, ch. 26; water and sewers, ch. 29; public works department, § 2-54; sales on streets and sidewalks, § 15-16; urban redevelopment, ch. 28; specifications for sanitary sewers, excavations, § 29-206 et seq. (Back)

**State Law reference—** Authority of city to appropriate funds for construction, repair of streets, RSMo, § 71.340; authority of city to adopt rules, regulate streets and sidewalks, RSMo, §§ 77.520, 82.190. (Back)

## ARTICLE I. IN GENERAL

Sec. 24-1. Street numbering system.

Sec. 24-2. Reserved.

Sec. 24-3. Unlawful to obstruct use of streets.

Sec. 24-4. Congregating, loitering on public streets, sidewalks prohibited.

Sec. 24-5. Display of merchandise, other articles; restrictions.

Sec. 24-6. Minor encroachments.

Sec. 24-7. Use of streets, sidewalks for building purposes.

Sec. 24-8. Playing in streets; on sidewalks; restrictions generally.

Sec. 24-9. Removal of snow.

Sec. 24-10. Placing of harmful objects adjacent to streets or sidewalks prohibited.

Sec. 24-11. Throwing tacks, nails, other injurious refuse on streets prohibited.

Sec. 24-12. Injuring, defacing, etc., street, sidewalk or improvement prohibited.

Sec. 24-13. Doorways, entrances to cellars and basements; requirements generally.

Sec. 24-14. Waterspout; duty of owner, occupant to prevent water on sidewalks.

Sec. 24-15. Major street plan adopted.

Sec. 24-16. Access to public streets.

Sec. 24-17. Reserved.

Sec. 24-18. Reserved.

Sec. 24-19. Reserved.

Sec. 24-20. Redevelopment corporation banners.

Sec. 24-21. Redevelopment area canopies.

Secs. 24-22—24-40. Reserved.

### Sec. 24-1. Street numbering system.

(a) *Number required.* Every building fronting on any street, or upon any lot or fractional lot in the city shall be numbered. For the purpose of a proper distribution of numbers, there shall be allotted one (1) number to each space of twenty (20) feet frontage, or fractional part thereof. It shall be the duty of the owners and occupants of each residential building in the city to have placed thereon, in a place visible from the street, numbers at least four (4) inches high, showing the correct number of the building. It shall be the duty of the owners and occupants of each commercial or industrial building in the city to have placed thereon two (2) sets of numbers at least six (6) inches high, showing the correct number of the building. One (1) set shall be visible from the street and the other set visible from the rear of the building where there is access to the rear of the building from a street, alley or parking area or where there is a rear entrance to or exit from the building or where exceptional circumstances exist as determined by the fire department, police department or chief code inspector.

All building numbers shall be in arabic numerals of a color contrasting with that of the building and script numbers shall not be permitted except as an auxiliary to the building numbers themselves.

(b) *Buildings on streets running north and south.* In numbering the buildings on streets running north and south, the numbering shall begin at Independence Street, as a dividing street, from Water Street to Mount Auburn Road; Percy Street, as a dividing street, from Mount Auburn Road to Interstate 55; William Street (Route K), as a dividing street, from Interstate 55 westward. The even numbers shall be on the east side, and the odd numbers shall be on the west side. The numbering shall be continued in each block on streets lying north and south of the dividing streets, respectively; the number of the second block shall begin with number 201, the third block with the number 301, and continue in the same manner, until all the buildings are numbered, reserving consecutive numbers for vacant spaces of twenty (20) feet.

(c) *Buildings on streets running east and west.* In numbering the buildings in blocks situated on streets running east and west, the numbering shall begin at the levee, or Water Street, and the same rules shall govern the numbering as provided above, except that the even numbers shall be on the north side of the street and the odd numbers shall be on the south side of the street.

(d) *Supplemental numbers.* Owners and occupants of buildings in the city may also elect to paint their address numbers on the street curb in front of said building. Address numbers painted on the curb shall be arabic numerals, black in color, at least four (4) inches high and placed on a white background. Painting of address numbers on the curb pursuant to this paragraph shall not relieve the owner and occupant from the requirements of compliance with paragraph (a) of this section relative to placement of numbers on the building.

(Code 1967, § 24-1; Ord. No. 972, art. 1, 2-20-91; Ord. No. 1033, art. 1, 6-17-91; Ord. No. 1386, art. 1, 8-2-93)

**Cross reference—** Buildings, ch. 7.

### Sec. 24-2. Reserved.

**Editor's note—**

Ord. No. 2051, art. 1, adopted Oct. 7, 1996, repealed § 24-2, which pertained to street foreman; office created; appointment; duties. See the Code Comparative Table.

### Sec. 24-3. Unlawful to obstruct use of streets.

No person shall obstruct or endanger, or place or permit anything to obstruct or endanger, the free passage or proper use of the public of any street, sidewalk, alley, crosswalk, bridge or entrance to any church, theater, motel, school or building, or any public hall or place, except as provided in this chapter.

(Code 1967, § 24-3)

### Sec. 24-4. Congregating, loitering on public streets, sidewalks prohibited.

No person or persons shall congregate, stand or loiter upon any public street or sidewalk so as to block or obstruct the same.

(Code 1967, § 24-4)

ARTICLE I. IN GENERAL

### Sec. 24-5. Display of merchandise, other articles; restrictions.

(a) *Suspension above pavement prohibited.* No person shall suspend any merchandise or other article in front of any store or house at any height above the pavement.

(b) *Restrictions generally.* No person shall place or display merchandise or other property upon any street, sidewalk or public place, except as follows:

(1) Merchants may occupy two (2) feet of the sidewalk next to and in front of their buildings for the purpose of displaying their wares and merchandise.

(2) Any person may occupy such space as may be necessary when receiving or shipping goods, if such goods are not permitted to remain more than four (4) hours on such sidewalk, street or public place and are not permitted to occupy at one (1) time, more than one-fourth the width thereof.

(Code 1967, § 24-5)

**Cross reference—** Licenses and business regulations, ch. 15; sales in congested areas or from metered parking spaces, § 15-16.

### Sec. 24-6. Minor encroachments.

Minor encroachments on city rights-of-way in areas zoned C-3, central business district, may be permitted only on the following conditions:

(1) That the encroachment proposed does not exceed four (4) inches, and

(2) That no excavation or filling on city right-of-way is required for such encroachment, except for such areas of excavation which do not project more than twelve (12) inches into city right-of-way as may be needed in the judgment of the city engineer for footings for bearing members that extend below the frost line, or if lower, the underground utility lines, provided further that the right-of-way and any pavement thereon are restored as nearly as practicable to their original condition after such excavation, and

(3) That in the opinion of the city engineer, the encroachment will not likely cause damage to, or interfere with, or obstruct the right-of-way or any pavement thereon, and

(4) That the encroachment does not place any additional weight upon the right-of-way or any pavement thereon, and

(5) That a permit be secured from the building official before any encroachment is made.

(Code 1967, § 24-6)

### Sec. 24-7. Use of streets, sidewalks for building purposes.

The city council or city engineer may permit any person to occupy for building purposes for a reasonable time so much of any street or sidewalk as may be necessary for such purpose.

(Code 1967, § 24-7; Ord. No. 2936, art. 2, 9-17-01)

**Cross reference—** Buildings, ch. 7.

ARTICLE I. IN GENERAL

### Sec. 24-8. Playing in streets; on sidewalks; restrictions generally.

(a) No person shall throw or bat any baseball or hardball upon or across any sidewalk, street or alley.

(b) Reserved.

(c) Every person playing at any game or amusement or engaging in any sport upon any street, sidewalk, alley or public place shall do so in a careful and prudent manner so as not to endanger the property of another or the life or limb of any person.

(Code 1967, § 24-8; Ord. No. 1030, art. 1, 6-17-91; Ord. No. 1379, art. 1, 7-19-93)

**Cross reference—** Parks and recreation, ch. 18.

### Sec. 24-9. Removal of snow.

No owner or occupier of any lot or land shall allow snow to remain upon any adjoining sidewalk to a greater depth than one (1) inch, ten (10) hours after the snow has fallen.

(Code 1967, § 24-10)

### Sec. 24-10. Placing of harmful objects adjacent to streets or sidewalks prohibited.

No person shall place or permit to be placed or remain on or along any railing or building front, or any part of any building, fence or premises, adjacent or contiguous to any street or sidewalk, any spikes, sharp or pointed cresting, nor any barbed wire fence, or any other thing dangerous and liable to snag, tear, cut or otherwise injure anyone coming in contact therewith.

(Code 1967, § 24-11)

### Sec. 24-11. Throwing tacks, nails, other injurious refuse on streets prohibited.

It shall be unlawful for any person to throw or place or cause to be thrown or placed on or upon any street of this city, any tacks, nails, wire, scrap metal, glass, crockery, sharp stones, or other substances injurious to the feet of persons or animals or to the tires or wheels of vehicles. Any person who has purposely, accidentally or by reason of an accident dropped from his person or any vehicle any such substance upon the street, shall immediately make all reasonable efforts to clear such street of the same.

(Code 1967, § 24-12)

**Cross reference—** Litter, § 22-71 et seq.

**State law reference—** Throwing tacks, nails, other injurious refuse on streets prohibited, RSMo, § 304.160.

### Sec. 24-12. Injuring, defacing, etc., street, sidewalk or improvement prohibited.

Except as specifically authorized in writing by the city engineer, no person shall remove, deface, injure or interfere with any street, sidewalk, alley, bridge or public place or any part or substance thereof, or any street marking, street sign, lamppost, signal, danger lamp, street barrier or any monument locating

the line of a street, alley, sidewalk or improvement. This prohibition shall not apply, however, to any city personnel while in the performance of their official duties.

(Code 1967, § 24-13; Ord. No. 2590, art. 1, 9-20-99)

### Sec. 24-13. Doorways, entrances to cellars and basements; requirements generally.

(a) *Iron grating required.* No person shall construct or maintain on, over, under or across any sidewalk any doorway or entrance to any basement or cellar, unless the doorway or entrance to such basement or cellar is securely guarded and covered by iron grating on a level with the sidewalk, the entire width thereof.

(b) *Opened entrances, doorways; requirements.* No person shall permit any basement door or grating in any street, alley or sidewalk to remain open or exposed without a fence or protection around it sufficient to protect the public, nor to remain open any longer than necessary for the immediate use thereof.

(Code 1967, § 24-14)

### Sec. 24-14. Waterspout; duty of owner, occupant to prevent water on sidewalks.

Every person owning or occupying any building in this city shall cause the pipes conducting water from the eaves of the building to be constructed so as not to spread the water over the sidewalk.

(Code 1967, § 24-15)

**Cross reference—** Water and sewers, ch. 29.

### Sec. 24-15. Major street plan adopted.

The major street plan on file in the office of the city clerk, including as may be contained in the city's comprehensive plan and as amended from time to time, is hereby adopted and approved as the street plan of the city.

(Code 1967, § 24-16; Ord. No. 4108, art. 1, 3-1-10)

### Sec. 24-16. Access to public streets.

No private roadway, driveway, alley or other point of vehicular egress or ingress to any public street shall be constructed, improved or modified without approval of the City Manager, and the number, location and design of all such new or existing access points shall be maintained only as approved by the City Manager consistent with requirements for safety and efficient circulation of pedestrian and vehicular traffic.

(Code 1967, § 24-17; Ord. No. 4108, art. 2, 3-1-10)

### Sec. 24-17. Reserved.

**Editor's note—**

Article 3 of Ord. No. 4108, adopted March 1, 2010, repealed and reserved § 24-17; which pertained to excavations—refilling, requirements, inspections; and derived from the 1967 Code and Ord. No. 2051, adopted Oct. 7, 1996.

### Sec. 24-18. Reserved.

**Editor's note—**

Article 3 of Ord. No. 4108, adopted March 1, 2010, repealed and reserved § 24-18; which pertained to adoption of major street plan; and derived from the § 24-19 of the 1967 Code.

### Sec. 24-19. Reserved.

**Editor's note—**

Article 3 of Ord. No. 4108, adopted March 1, 2010, repealed and reserved § 24-19; which pertained to construction, alteration, etc., of sidewalks, curbs, driveways, streets; and derived from Ord. No. 745, adopted Aug. 21, 1989.

### Sec. 24-20. Redevelopment corporation banners.

It shall not be unlawful for any redevelopment corporation to erect or maintain banners depicting the corporation's logo on any lamppost within the corporation's redevelopment area, provided, that such banners are in conformity with the corporation's final development plan and that the consent of the owner of the lamppost has been obtained.

(Code 1967, § 24-21)

**Cross reference—** Urban redevelopment, ch. 28.

### Sec. 24-21. Redevelopment area canopies.

(a) It shall not be unlawful for any owner or possessor of real estate within a redevelopment area to erect or maintain a canopy over and upon a public sidewalk; provided, that such canopy is erected and maintained in conformity with the city's building code and the applicable final development plan and provided that the owner or possessor complies with the provisions of paragraph (b) of this section.

(b) Before any canopy is erected pursuant to paragraph (a) of this section, an application for a building permit describing the canopy in detail shall be submitted to the building official. If the proposed canopy meets all city code requirements, the building official shall forward the application to the city manager for presentation to the city council and shall forward a copy of the application to the appropriate redevelopment corporation for its review and comment. If the council approves the application, the applicant shall be required to enter into an agreement with the city to provide adequate liability insurance covering the canopy and to indemnify the city on all claims related to the canopy before a permit is issued by the building official. The decision of the city council to grant or deny the building permit shall be final and unreviewable.

(Code 1967, § 24-22)

**Secs. 24-22—24-40. Reserved.**

## ARTICLE II. TREES AND SHRUBS [2]

Sec. 24-41. Definitions.

Sec. 24-42. Purpose.

Sec. 24-43. Establishment of a city tree board.

Sec. 24-44. Duties and responsibilities.

Sec. 24-45. Public tree species to be planted.

Sec. 24-46. Spacing.

Sec. 24-47. Reserved.

Sec. 24-48. Distance from street corners and fire hydrants.

Sec. 24-49. Utilities.

Sec. 24-50. Public tree care.

Sec. 24-51. Injuring, destroying prohibited.

Sec. 24-52. Tree topping.

Sec. 24-53. Pruning, corner clearance.

Sec. 24-54. Dead or diseased tree removal on private property.

Sec. 24-55. Removal of stumps and debris.

Sec. 24-56. Designation of exceptional trees.

Sec. 24-57. Interference with board.

Sec. 24-58. Review by city council.

Secs. 24-59—24-60. Reserved.

### Sec. 24-41. Definitions.

*City* means Cape Girardeau, Missouri.

*Exceptional trees* means those trees determined by the tree board, as provided for herein, to be of notable historic interest, high aesthetic value, or of unique character because of species, age or size.

*Private trees* means those trees, shrubs, bushes and all woody vegetation growing, on privately-owned property, whether business or residential.

*Public trees* means those trees, shrubs, bushes and all other woody vegetation on all land owned by the city in fee simple. Public trees include trees commonly referred to as street trees and park trees.

*Tree board* shall consist of the director of public works of the city, the director of parks and recreation of the city, one (1) member of the city parks and recreation advisory board, (selected by the chairman of the board) and four (4) residents of Cape Girardeau selected by the city council. As of the effective date of this section, this board is constituted with two (2) resident members whose terms expire on February 1, 2015, and February 1, 2016. The initial terms of office for the two (2) additional resident members shall also expire February 1, 2015, and February 1, 2016. Thereafter the terms of these members shall be for

three (3) years. The positions held by the department directors shall be ex-officio with the right to vote on all matters to come before the board.

(Ord. No. 2434, art. 2, 11-2-98; Ord. No. 4516, art. 1, 11-18-13)

### Sec. 24-42. Purpose.

The purpose of this "tree ordinance" is to improve the aesthetic appeal of the city and to maintain a healthy, useful population of public trees that, through proper cultivation, maintenance, pruning and removal will not infringe upon the public safety or present a hazard to the citizens of the city or to visitors in the city. No provision of this chapter shall be applicable to private trees as defined herein, except as provided herein to secure the public safety and well-being.

(Ord. No. 2434, art. 2, 11-2-98)

### Sec. 24-43. Establishment of a city tree board.

A tree board (hereafter "board") is hereby established for the purposes set out in this chapter. The board may delegate its responsibilities hereunder to an internal committee at its discretion. The board may utilize volunteer consultants as it deems necessary.

(Ord. No. 2434, art. 2, 11-2-98)

### Sec. 24-44. Duties and responsibilities.

It shall be the responsibility of the board to study, investigate, counsel and develop and/or update annually, and administer a written plan for the care, preservation, pruning, planting, replanting, removal or disposition of public trees in parks, along streets and in other public areas. Such plan will be presented annually to the city council and upon their acceptance and approval shall constitute the official comprehensive city tree plan for the City of Cape Girardeau, Missouri. The board, when requested by the city council shall consider, investigate, make findings, report and recommend upon any special matter of question coming within the scope of its work.

(Ord. No. 2434, art. 2, 11-2-98)

### Sec. 24-45. Public tree species to be planted.

The following list constitutes the official public tree species for Cape Girardeau, Missouri. No species other than those included in this list may be planted as public trees without the written approval of the tree board.

| SMALL TREES | MEDIUM TREES | LARGE TREES |
|---|---|---|
| (Trees under 35') | (Trees 35-60') | (Trees to 80') |
| Blackhaw* | Beech, European | American Basswood* |
| Cherry, Flowering** | Birch, River* | American Beech* |

ARTICLE II. TREES AND SHRUBS

| | | |
|---|---|---|
| Crabapple, Flowering*** | Blackgum* | Baldcypress* |
| Dogwood, Cornel** | Columnar English Oak | Catalpa* |
| Dogwood, Corneliancherry** | Columnar European Hornbeam | Chinkapin* |
| Dogwood, Flowering*** | Columnar Norway Maple | Coffeetree, Kentucky* |
| Dogwood, Kousa** | Columnar Red Maple | Cucumber Tree |
| Dogwood, Pagoda** | Columnar Sugar maple "Fairview" | Ginkgo (male) |
| Eastern Redbud*** | Eastern Red Cedar* | Hackberry |
| Hawthorn, SP*** | Elm, Lacebark | London Planetree |
| Holly, Deciduous | Goldenrain Tree | Magnolia, Southern |
| Ironwood* | Hemlock, Canadian | Oak, Burr* |
| Magnolia, (Little Girl Hybrids) ** | Holly, American* | Oak, Cherrybark* |
| Maple, Amur | Holly Fosters | Oak, Northern Red* |
| Maple, Japanese | Honey Locust, Thornless | Oak, Overcup* |
| Maple, Paperbark | Katsuratree | Oak, Post* |
| Maple, Trident | Linden, Littleleaf | Oak, Shingle* |
| Red Buckeye*** | Maple, Red* | Oak, Shumard* |
| Serviceberry*** | Oak, Sawtooth | Oak, Southern Red* |
| Sourwood* | Pagoda Tree, Japanese | Oak, Swamp White* |
| White Fringe Tree*** | Sassafras* | Oak, White* |

| | | |
|---|---|---|
| | Spruce, Colorado Blue | Oak, Willow* |
| | Spruce, Norway | Oak, Scarlet* |
| | Yellowwood* | Pecan* |
| | Zelkova | Pine, Eastern White |
| | | Pine, Loblolly* |
| | | Redwood, Dawn |
| | | Short Leaf* |
| | | Sugar Maple* |
| | | Suger Berry* |
| | | Swamp Chestnut* |
| | | Sweetgum (Fruitless)* |
| | | Tulip Poplar* |

*Trees native to Missouri **Flowering Trees ***Flowering trees native to Missouri

(Ord. No. 2434, art. 2, 11-2-98; Ord. No. 4009, arts. 1, 2, 3-16-09)

### Sec. 24-46. Spacing.

The spacing of public trees shall be in accordance with the three (3) species size classes listed in section 24-45 of this article and no public trees may be planted closer together than the following: small trees, thirty (30) feet; medium trees, forty (40) feet; and large trees, fifty (50) feet.

(Ord. No. 2434, art. 2, 11-2-98; Ord. No. 4009, arts. 3, 4, 3-16-09)

### Sec. 24-47. Reserved.

**Editor's note—**

Ord. No. 4009, art. 5, adopted March 16, 2009, repealed § 24-47, which pertained to distance from curb and sidewalk and derived from Ord. No. 2434, adopted November 2, 1998.

### Sec. 24-48. Distance from street corners and fire hydrants.

No public tree shall be planted closer than fifty (50) feet from any street corner, measured from the point of nearest intersecting curbs or curblines. No public tree shall be planted closer than ten (10) feet from any fire hydrant.

(Ord. No. 2434, art. 2, 11-2-98)

### Sec. 24-49. Utilities.

No public tree shall be planted whose growth at maturity would reach upwards or laterally within ten (10) feet of any overhead electrical utility wire or electrical transmission line.

(Ord. No. 2434, art. 2, 11-2-98)

### Sec. 24-50. Public tree care.

(a) The city shall have the right to plant, prune, maintain and remove public trees within the lines of all streets, alleys, avenues, lanes, squares and public grounds, as may be necessary to insure public safety or to preserve or enhance the beauty of such public grounds.

(b) The city may remove or cause or order to be removed, any public tree or part thereof which is in an unsafe condition or which by reason of its nature is injurious to sewers, electric power lines, gas lines, water lines, or other public improvements, or is affected with any injurious fungus, insect or other pest. This section does not prohibit the planting of public trees by adjacent property owners providing that the selection and location of said public trees is in accordance with sections 24-45 through 24-49 of this article.

(Ord. No. 2434, art. 2, 11-2-98)

### Sec. 24-51. Injuring, destroying prohibited.

No person shall cut down, uproot, cut, injure or destroy any public tree growing in or along any street sidewalk, park or public place, except to trim or prune the limbs and branches as provided in this article.

(Ord. No. 2434, art. 2, 11-2-98)

### Sec. 24-52. Tree topping.

It shall be unlawful for any person, firm or city department to top any public tree, park tree, or other tree on public property. Topping is defined as the severe cutting back of limbs to stubs larger than three (3) inches in diameter within the tree's crown to such a degree so as to remove the normal canopy and disfigure the tree. Public trees severely damaged by storms or other causes, or certain public trees under utility wires or other obstructions where other pruning practices are impractical may be exempted from this article.

(Ord. No. 2434, art. 2, 11-2-98)

ARTICLE II. TREES AND SHRUBS

### Sec. 24-53. Pruning, corner clearance.

Every owner of any private tree overhanging any street or easement within the city shall prune the branches so that such branches shall not obstruct the light from any street lamp or obstruct the view or proper sight distance of any street intersection or traffic control device and so that there shall be a clear space of not less than eight (8) feet above the surface of the sidewalk and not less than fourteen (14) feet above the surface of the street or so that such branches do not interfere with motor vehicle traffic, driver's vision or maintenance equipment operating within the street or street right-of-way. Said owners shall remove all dead, diseased or dangerous trees, or broken or decayed limbs which constitute a menace to the safety of the public. The city shall have the right to prune any tree or shrub on private property when it is found to be in violation of any provision of this article.

(Ord. No. 2434, art. 2, 11-2-98)

### Sec. 24-54. Dead or diseased tree removal on private property.

(a) The city shall have the right to cause the removal of any dead or diseased trees or provide appropriate control measures for diseased or pest infected trees on private property within the city, when such trees constitute a hazard to public property or to persons on public property, or harbor insects or disease which constitute a potential threat to other trees within the city. The board will notify in writing the owner(s) of such trees. Removal shall be done by said owner(s) at his/their own expense within sixty (60) days after the date of service of notice for insect infested or diseased trees; or, within fourteen (14) days after the date of service of notice for trees constituting a hazard to life and property. In the event of failure of the owner(s) to comply, the tree board shall conduct a full and adequate hearing upon the matter after giving the owner(s) at least twenty-one (21) days written notice of the hearing.

(b) The board shall hear from city officials, the property owner(s) and any other person(s) having an interest in the matter. The board will issue a ruling upon specific findings of fact supporting its ruling. If the tree board rules for the city, then the property owner(s) shall have fourteen (14) days in which to remove the affected trees. If the property owner(s) fail(s) to perform the required work within the fourteen (14) days allowed, then the city shall have the authority to remove such trees and charge the cost of removal to the owner(s)' property which said cost shall be certified to the city clerk as a special assessment represented by a special tax bill against the real property affected, said tax bill shall be a lien upon the property and deemed a personal debt against the property owner(s). Except as provided in this article, at the request of the taxpayer, this special tax bill may be paid in installments over a period of not more than ten (10) years; said assessment shall bear interest at the rate of eight (8) percent per annum until paid.

(c) The property owner(s) may appeal the ruling of the tree board to the city council. The council shall review the decision of the tree board at a public hearing. The appeal must be made in writing within ten (10) days from the decision of the tree board. The council shall review the decision of the tree board and may reverse its ruling, let its ruling stand or may enter a new ruling in accordance with the facts as determined by the council at a public hearing. For purposes of appeal, the decision of the city council shall be a final appealable order from which the property owner(s) described in RSMo 67.410(3) may appeal to the circuit court as established in RSMo Chapter 536.

(Ord. No. 2434, art. 2, 11-2-98)

### Sec. 24-55. Removal of stumps and debris.

All stumps of street and park trees shall be removed to a level not less than six (6) inches below the surface of the ground so that the top of the stump shall not project above the surface of the ground. All

limbs, trees, branches, leaves and twigs taken from any tree and the remains of any stump removed shall be removed from any street or easement every evening after completing each day's work, and in any event not later than 7:30 p.m.

(Ord. No. 2434, art. 2, 11-2-98)

## Sec. 24-56. Designation of exceptional trees.

Both public and private trees may be designated as exceptional and shall thereafter be considered public landmarks and shall not be destroyed or endangered.

(1) *Procedure.* Any person may nominate a tree to be designated an exceptional tree. A private tree may be so designated only with the approval of the owner. Once designated, the private tree shall be an exceptional tree regardless of a subsequent change in ownership of the property upon which the tree is located. All nominations for exceptional tree designation shall be reviewed by the tree board which shall make a recommendation on such nomination to the city council. The city council may, on it own initiative or upon recommendation by the tree board, designate a tree as "exceptional" as defined herein and report such designation to the tree board which shall maintain an inventory of all exceptional trees.

(2) *Criteria.* The designation of an exceptional tree shall be based upon an evaluation of the tree in relation to one (1) or more of the following criteria:

a. The tree is demonstrated to have an association with a documented historical event or is located on a site which has been designated a local or national historic landmark property.

b. The tree is of unique character because of its age, species, variety or because of the size and development of its crown, trunk or main stem.

c. The designation of an exceptional tree shall also meet all of the following criteria:

1. The tree is free of disease, pests and serious injury.

2. The tree has a life expectancy of more than ten (10) years.

3. The tree is free of structural defects and does not in any manner constitute or present a hazard to the public.

(3) *Status after designation.* Upon designation as an exceptional tree, a private tree shall be thereafter treated as a public tree for purposes of this article.

(Ord. No. 2434, art. 2, 11-2-98)

## Sec. 24-57. Interference with board.

It shall be unlawful for any person to prevent, delay or interfere with the board, or any of its agents, while engaging in and about the planting, cultivating, mulching, pruning, spraying, or removing of any public trees, exceptional trees, or trees on private grounds, as authorized in this article.

(Ord. No. 2434, art. 2, 11-2-98)

## Sec. 24-58. Review by city council.

The city council shall have the right to review the conduct, acts and decisions of the board. Any person may appeal from any ruling or order of the board to the city council who may hear the matter and make final decision.

(Ord. No. 2434, art. 2, 11-2-98)

**Secs. 24-59—24-60. Reserved.**

---

FOOTNOTE(S):

---

--- (**2**) ---

**Editor's note—** Ord. No. 2434, art. 1, adopted 11-2-98, repealed §§ 24-41—24-45 which pertained to trees. Art. 2 of said ordinance enacted provisions designated as §§ 24-41—24-58 to read as herein set out. See the Code Comparative Table. (Back)

## ARTICLE III. STREET MAINTENANCE DISTRICTS [3]

Sec. 24-61. Established.

Sec. 24-62. District boundaries.

Sec. 24-63. City council to provide for maintenance; assessment of special tax bills.

Sec. 24-64. Special assessments for improvements; attorney and engineering fees.

Secs. 24-65—24-80. Reserved.

### Sec. 24-61. Established.

The city is hereby divided into two (2) districts for convenience in providing for the sprinkling, oiling, repairing, surfacing and resurfacing of the streets, alleys and public places within such districts.

(Code 1967, § 24-44)

### Sec. 24-62. District boundaries.

The two (2) districts provided for in section 24-61 are described as follows:

(1) *District A.* District A shall comprise all of that area lying within the city limits of the City of Cape Girardeau, north of the north right-of-way line of Independence Street from the east low water mark of the Mississippi River to the west boundary of the existing city limits.

(2) *District B.* District B shall comprise all of the area lying within the city limits lying south of District A.

(Code 1967, § 24-45)

### Sec. 24-63. City council to provide for maintenance; assessment of special tax bills.

The city council shall from time to time by ordinance provide for the sprinkling, oiling, repairing, surfacing and resurfacing of streets, alleys and public places within the districts provided for by this article and shall provide that the cost of such sprinkling, oiling, repairing, surfacing and resurfacing shall be paid wholly or in part by special tax bills assessed in favor of the city or the contractor who performs the work of sprinkling, oiling, repairing, surfacing and resurfacing as the case may be, against the lots and tracts of land fronting and bordering on the streets, alleys and public places where such sprinkling, oiling, repairing, surfacing and resurfacing is done, in proportion that the linear feet of each lot fronting or bordering on the street, avenue, alley or public place so sprinkled, oiled, repaired, surfaced or resurfaced bears to the total number of linear feet of all the property chargeable with the special tax aforesaid.

(Code 1967, § 24-49)

**Cross reference—** Special tax bills for removal of weeds, § 13-35.

ARTICLE III. STREET MAINTENANCE DISTRICTS

### Sec. 24-64. Special assessments for improvements; attorney and engineering fees.

When assessments made for constructing and repairing sidewalks and sidewalk curbing and for sewers and for grading, paving, excavating, macadamizing, curbing and guttering of any street, avenue, alley, square or other highway or part thereof, and repairing the same, or for any other improvement authorized by the statutes of the state, such assessments shall be known as "Special Assessments for Improvements" and shall be levied and collected as a special tax and a special tax bill shall issue therefor and be paid in the manner provided by ordinance. These special tax bills may include attorney's fees or engineering fees or both when provided by ordinance, with the total of these fees not to exceed ten (10) percent of the total cost of the improvement, and such fees may bear not to exceed eight (8) percent interest per annum from sixty (60) days after the date of issue until paid.

(Code 1967, § 24-50)

### Secs. 24-65—24-80. Reserved.

---

FOOTNOTE(S):

---

--- (**3**) ---

**State Law reference—** Authority to assess costs for improvement of streets, alleys and sidewalks, RSMo, §§ 88.507, 88.811 et seq.; procedure for issuance of tax bills, RSMo, §§ 88.520 et seq., 88.811 et seq. (Back)

## ARTICLE IV. CURBS AND DRIVEWAYS

Sec. 24-81. Sidewalk requirements for construction of driveways.

Sec. 24-82. Duty of owner to restore, rebuild curbs, sidewalks upon abandoning existing driveway.

Sec. 24-83. Removal of curb from radius portion of curb at intersecting streets.

Sec. 24-84. Permit, approval of plans required.

Sec. 24-85. Penalty for violation.

Secs. 24-86—24-90. Reserved.

### Sec. 24-81. Sidewalk requirements for construction of driveways.

(a) Where new driveways are to be constructed, the owner or builder shall construct same in such manner as will permit the future construction of sidewalks, so that the grade of the driveway across such sidewalk shall not exceed one-quarter inch per foot of width of the sidewalk. In the case where the driveway is constructed of P.C. Concrete, contraction joints shall be made at both sides of the future position of such sidewalk, and proper expansion joints placed, all as directed by the city engineer.

(b) Where the driveway is to cross an existing sidewalk the existing grade of such walk shall not be changed, however, its slope toward the street may be modified if so approved by the city engineer.

(Code 1967, § 24-63; Ord. No. 4405, art. 1, 12-17-12)

### Sec. 24-82. Duty of owner to restore, rebuild curbs, sidewalks upon abandoning existing driveway.

In the event of a change in the use of a property, or the situation of a structure, which results in the abandonment of an existing driveway from a street, it shall be the duty of the owner of such property to proceed at once to restore or adjust missing curb, or curb and gutter, and if the sidewalk across such driveway is not to the proper grade because of such driveway, to reconstruct the sidewalk to a normal position as is determined by the grade of the curb so restored, so that the area previously occupied by the driveway may be properly used by the public for parking purposes and for the proper protection of pedestrians using the sidewalk. Such work of restoration shall meet the approval of the city engineer and conform to all specifications of the city pertaining to the work.

(Code 1967, § 24-64)

### Sec. 24-83. Removal of curb from radius portion of curb at intersecting streets.

In no event shall the curb be removed from the radius portion of the curb at intersecting streets, where sidewalk now, or future sidewalk will exist, for the purpose of constructing a driveway.

(Code 1967, § 24-65)

ARTICLE IV. CURBS AND DRIVEWAYS

### Sec. 24-84. Permit, approval of plans required.

No person shall excavate or fill on city rights-of-way without first obtaining approval of the plans and a permit pursuant to and consistent with the provisions of chapter 24, article V.

(Code 1967, § 24-66; Ord. No. 4108, art. 5, 3-1-10)

### Sec. 24-85. Penalty for violation.

Any person who violates the provisions of this article shall be subject to the payment of a fine not to exceed five hundred dollars ($500.00).

(Code 1967, § 24-67)

### Secs. 24-86—24-90. Reserved.

## ARTICLE V. USE AND OCCUPANCY OF PUBLIC RIGHTS-OF-WAY

Sec. 24-91. Policy.

Sec. 24-92. Definitions.

Sec. 24-93. Administration.

Sec. 24-94. Franchise or rights-of-way agreement required.

Sec. 24-95. Permits required.

Sec. 24-96. Permit conditions.

Sec. 24-97. Inspection and acceptance of excavations after backfilling and settlement.

Sec. 24-98. Final repair of excavations; specifications; city restoration.

Sec. 24-99. Permit displayed.

Sec. 24-100. Permit denial.

Sec. 24-101. Deposit with city manager.

Sec. 24-102. Permit fees; supplemental deposit.

Sec. 24-103. Map and location.

Sec. 24-104. Liability insurance, performance and maintenance bond requirement.

Sec. 24-105. Facility relocation.

Sec. 24-106. Rights-of-way vacation.

Sec. 24-107. Abandoned and unusable facilities.

Sec. 24-108. Revocation of permits.

Sec. 24-109. Maintenance of rights-of-way.

Sec. 24-110. Appeals.

Sec. 24-111. Violations; penalties.

### Sec. 24-91. Policy.

It shall be the policy of the city to authorize use of the rights-of-way in a manner that minimizes interference to the public use and minimizes the burden on the rights-of-way physically and aesthetically to the full extent permitted by law. Any use of the rights-of-way by any person shall be subject to the terms and conditions hereof, in addition to all applicable federal, state or local requirements, and nothing herein shall be enforced or interpreted to contravene any superseding law, including, but not limited to, RSMo § 67.1830 et seq., to the extent applicable to any given circumstance.

The right granted to a person to use the rights-of-way is limited to the use that the person has filed with the city and approved in accordance with this article. These rights shall grant nonexclusive use only to that person except where otherwise provided herein or when expressly authorized by the city.

(Ord. No. 4108, art. 8, 3-1-10)

ARTICLE V. USE AND OCCUPANCY OF PUBLIC RIGHTS-OF-WAY

## Sec. 24-92. Definitions.

The following definitions shall apply to this section, except that where the definitions set forth in RSMo § 67.1830, as may be amended, are required by law to apply to specific uses of the rights-of-way, such definitions shall apply to such circumstances.

*Abandoned facilities* means those facilities owned by a ROW user that are not in use or cannot be utilized by the owner in the future.

*Administrative fee* means that fee charged by the city to administer all aspects of rights-of-way management to recover its cost of this management.

*Applicant* means any person required to apply for a permit.

*City* means the City of Cape Girardeau, Missouri, a municipal corporation and any duly authorized representative.

*City manager* means the city manager of the City of Cape Girardeau, Missouri, or his or her authorized representative.

*Construct* means and includes construct, install, erect, build, affix or otherwise place any fixed structure or object, in, on, under, through or above the rights-of-way.

*Emergency* means any incident that requires immediate intrusion and work within the rights-of-way to restore service to a user.

*Excavate* means any removal of the surface, or subsurface earth or boring or tunneling activity within the public rights-of-way.

*Excavation permit* means the authorization required to make excavations for the construction, installation, repair or maintenance of any type of facility within the rights-of-way.

*Embedded* means to surround tightly or incorporate.

*Facilities maintenance* means construction, alteration, maintenance, installation, storage, or location of facilities installed below, on or above ground in the public rights-of-way, other than excavation, that also:

(1) Causes or threatens to cause any obstruction or interference to any vehicular or pedestrian traffic or traffic lane in the rights-of-way;

(2) Involves temporary or permanent storage of materials or equipment on rights-of-way;

(3) Causes or reasonably may cause damage or alteration to any public improvement or vegetation within the rights-of-way; or

(4) Involves removal, replacement or alteration to any safety feature or requirement within the rights-of-way, including, but not limited to, removal of manhole covers, altering lighting, traffic signage or signals, placement or removal of traffic barricades, etc.

Facilities maintenance shall not include routine or other maintenance on poles, boxes, or other facilities that does not result in or qualify under one (1) or more of the conditions described in subparagraphs (1) through (4) herein.

*Facilities maintenance permit* means the authorization required to perform facilities maintenance within the rights-of-way other than excavations.

*FCC* means the Federal Communications Commission.

*Facility* means all/any lines, pipes, irrigation systems, wires, cables, conduit facilities, poles, towers, vaults, pedestals, boxes, or other equipment owned or controlled by an entity other than the city.

*Facility based service provider* means a service provider owning or possessing facilities in the rights-of-way.

*Governing body* means the mayor and the city council of the City of Cape Girardeau, Missouri.

*Governmental entity* means any subdivision of the governments within the United States of America.

*PSC* means the Missouri Public Service Commission.

*Pavement* means the improved surface of the public way with concrete, asphalt, aggregate or other treated materials.

*Permit* means both an excavation permit and a facilities maintenance permit.

*Person* means an individual, person or body natural or corporate.

*Public easement* means any easement for utilities, access, or other use dedicated to the city or in the name of the city irrespective of whether the easement is held in trust by the city for private and public users and regardless of whether private utilities or others in addition to or other than the city are actually using the easements.

*Public improvement* means any public project undertaken by the city for the public good.

*Public lands* means any real property owned by the city not used as rights-of-way or considered to be rights-of-way.

*Repair* means the temporary work necessary to make the rights-of-way useable for the public.

*Restoration* means returning the rights-of-way surface to its original condition, or better.

*Reseller service provider* means a person providing service within the city that does not have its own facilities in the rights-of-way, but instead uses the rights-of-way by interconnecting with or using the network elements of another ROW user utilizing the rights-of-way, and/or by leasing excess capacity from a facility based service provider.

*Rights-of-way* or *ROW* means the area on, below or above a public roadway, highway, street or alleyway in which the city has an ownership interest, and including such adjacent areas of such public ways within such ownership interest as made available by the city for rights-of-way use herein, but not including:

(1) Easements obtained by utilities or private easements in platted subdivisions or tracts;

(2) Railroad rights-of-way and ground utilized or acquired for railroad facilities; or

(3) Poles, pipes, cables, conduits, wires, optical cables, or other means of transmission, collection or exchange of communications, information, substances, data, or electronic or electrical current or impulses utilized by a utility owned or operated by a governmental entity pursuant to RSMo Chapter 91, or pursuant to a charter form of government.

*Rights-of-way user* or *ROW user* means such persons and entities maintaining, constructing or installing facilities in the public rights-of-way of the city unless otherwise expressly exempted by law. The term shall not include persons only using the rights-of-way for incidental uses authorized pursuant to section 24-94(a)(3) to the extent as may be exempted or limited by the terms of such approval. The term also shall not include the city; provided that the city shall nevertheless comply with all such requirements applicable to ROW users to the extent such compliance is otherwise required by applicable state or federal law.

*Service* means that function provided to property adjoining the public rights-of-way from a service provider.

*Standard specifications* means the City of Cape Girardeau Standard Specifications and Drawings, as may be amended, on file with the city clerk.

(Ord. No. 4108, art. 8, 3-1-10)

## Sec. 24-93. Administration.

The city manager is the principal city official responsible for administration of this chapter including permits for excavation and facilities maintenance within the rights-of-way. The city manager may delegate any or all of the duties hereunder.

(Ord. No. 4108, art. 8, 3-1-10)

## Sec. 24-94. Franchise or rights-of-way agreement required.

(a) *Agreement or franchise required.* Except when otherwise authorized by applicable law, no ROW user may construct, maintain, own, control, or use facilities in the rights-of-way without a franchise or ROW agreement with the city as provided herein. All such franchises and agreements shall be approved by ordinance of the city council on a nondiscriminatory basis provided that the applicant is in compliance with all applicable requirements. Such franchises and agreements shall be deemed to incorporate the terms of this article and other applicable laws of the city, except as may be expressly stated in such agreements and franchises. Reseller service providers shall not be required to obtain a franchise or agreement but shall be required to register with the city on forms provided by the city prior to providing service.

(1) *Franchise.* A franchise shall be required from the city in conformance with all applicable franchise procedures for any ROW user seeking to use the rights-of-way for purposes of providing or distribution of electricity, gas, water, steam, lighting, or sewer public utility service in the city, except where otherwise provided by law. Such franchise may be granted only after satisfaction of all applicable procedural or substantive requirements established by Charter or other law.

(2) *ROW agreement.* A ROW agreement shall be required with the city for all ROW users not set forth in subsection (1), irrespective of any state licensing, franchise or certificate that may also be held by the ROW user, except as otherwise required herein or by law. Such agreements shall conform to all applicable law, but shall not be subject to procedures applicable to franchises and the city may, if appropriate, approve form agreements that may be executed by the city manager after approval by the city council.

(3) *Incidental uses.* Incidental uses of the public rights-of-way may be permitted without a franchise or ROW agreement pursuant to a permit or license issued by the city manager. The city manager may establish such application, requirements and conditions applicable to such uses consistent with the purposes of this article or as otherwise established by law.

(b) *Franchises and agreements nonexclusive.* The authority granted by the city in any agreement or franchise shall be for nonexclusive use of the rights-of-way. The city specifically reserves the right to grant, at any time, such additional agreements or other rights to use the rights-of-way for any purpose and to any other person, including itself, as it deems appropriate, subject to all applicable law. The granting of an agreement or franchise shall not be deemed to create any property interest of any kind in favor of the ROW user.

(c) *Lease required for public lands.* Unless otherwise provided, use or installation of any facilities in, on or over public lands of the city not constituting rights-of-way shall be permitted only if a lease agreement or other separate written approval has been negotiated and approved by the city with such reasonable terms and conditions as the city may require.

(d) *Transferability.* Except as provided in this article or as otherwise required by law, no franchise, agreement or permit may be transferred without the written application to and consent of the city

based on the requirements and policies of this article and only after satisfaction of all applicable procedural or substantive requirements established by Charter or other law. The city shall not unreasonably withhold its consent to transfer as provided herein, but any costs incurred shall be paid by the applicant.

(e) *Application for franchise or agreement required.*

(1) *Application.* An application for franchise or ROW agreement shall be presented to the city manager in writing and shall include all such information as is required by this section. The ROW user shall be responsible for accurately maintaining the information in the application during the term of any franchise or agreement and shall be responsible for all costs incurred by the city due to the failure to provide or maintain as accurate any application information required herein.

(2) *Application fee.* An application fee for such agreement or franchise shall be submitted to the city in the amount of two thousand five hundred dollars ($2,500.00) or as otherwise established by the city manager to recover any actual costs anticipated and incurred by the city in reviewing, documenting, or negotiating such agreement or franchise, including reasonable legal fees and costs to review compliance of the applicant and any initial proposed facilities and uses, provided that no costs, if any, of litigation or interpretation of RSMo § 67.1830 or 67.1832, shall be included if such inclusion is prohibited by law as to that applicant. If the actual costs are thereafter determined to be less than the application fee, such amount shall be returned to the applicant after written request therefrom; if the actual costs reasonably exceed the application fee, applicant shall, after written notice from the city, pay such additional amount prior to issuance by the city of any final approval. Nothing herein shall be construed to prohibit the city from also charging reasonable compensation for use of the public rights-of-way where such a fee is not contrary to applicable law.

(3) *Application form.* A ROW user shall submit a completed application for franchise or ROW agreement on such form provided by the city, which shall include information necessary to determine compliance with this article.

(4) *Approval process.* After submission by the ROW user of a duly executed and completed application and application fee, and executed franchise or ROW agreement as may be provided by the city manager, or as modified by the city manager in review of the specific circumstances of the application, all in conformity with the requirements of this article and all applicable law, the city manager shall submit such franchise or agreement to the city council for approval. Upon determining compliance with this article, the city council shall authorize execution of the franchise or agreement (or a modified agreement otherwise acceptable to the city consistent with the purposes of this article), and such executed franchise or agreement shall constitute consent to use the public rights-of-way; provided that nothing herein shall preclude the rejection or modification of any executed franchise or agreement submitted to the city to the extent such applicable law does not prohibit such rejection or modification, including where necessary to reasonably and in a uniform or nondiscriminatory manner reflect the distinct engineering, construction, operation, maintenance, public works or safety requirements applicable to the applicant.

(f) *No cause of action.* A ROW user shall have no damages remedy or monetary recourse whatsoever against the city for any loss, cost, expense, or damage arising from any of the provisions or requirements of any franchise or agreement, or from the use of the rights-of-way and any use of the rights-of-way shall be deemed subordinate to the primary public use by the city. Nothing herein shall preclude injunctive or declaratory judgment relief where such relief is otherwise entitled under law and the requirements therefor are otherwise satisfied; provided, however, that the validity of an executed franchise or agreement shall not be subject to challenge.

(Ord. No. 4108, art. 8, 3-1-10)

## Sec. 24-95. Permits required.

(a) *Excavation permit.* No person shall make an excavation within the rights-of-way without first obtaining an excavation permit from the city manager. All excavation permits shall expire after sixty (60) days from the date of issuance, unless otherwise specified in the permit.

(b) *Facilities maintenance permit; bulk or individual permits.* No person shall perform facilities maintenance within the rights-of-way without first obtaining a facilities maintenance permit from the city manager, except where such facilities maintenance is expressly authorized by an existing valid excavation permit for the applicable maintenance location. In addition to the conditions set forth in section 24-96 below, conditions of a facilities maintenance permit shall be as established in the permit and shall include requirements of notice to the city whenever traffic lanes are to be obstructed, manhole covers or safety barriers removed or altered, temporary or other barricades installed, and other events set forth in the permit. The city manager may issue individual facilities maintenance permits for specific proposed facilities maintenance actions or may issue bulk facilities maintenance permits covering multiple projects, types of actions or locations during a period of up to one (1) year that may be thereafter performed during that permit year. Where a bulk permit is proposed, the applicant shall provide sufficient information regarding the types of actions and locations to be approved so as to allow the city manager to condition and ensure compliance with safety and other regulations herein. All facilities maintenance permits shall expire after sixty (60) days from the date of issuance, unless otherwise specified in the permit.

(c) *Emergencies.* In case of emergency requiring immediate attention to remedy defects, and in order to prevent loss or damage to persons or property, it shall be sufficient that the person making such excavation or performing such facilities maintenance obtain the necessary permit as soon as possible and may proceed without a permit when such permit cannot be obtained before starting such excavation or facilities maintenance. Notice to the city of the emergency shall be provided at the earliest possible time and a permit shall be obtained as soon as reasonably possible, or as otherwise directed by the city.

(d) *Applicable regulations.* All ROW users and persons obtaining an excavation permit or facilities maintenance permit shall be subject to the permit conditions in section 24-96 herein and all rules, regulations, policies, resolutions, and ordinances now or hereafter adopted or promulgated by the city in the reasonable exercise of its police power and are subject to all applicable laws, order, rules and regulations adopted by governmental entities now or hereafter having jurisdiction. In addition, the ROW users shall be subject to all technical specifications, design criteria, policies, resolutions and ordinances now or hereafter adopted or promulgated by the city in the reasonable exercise of its police power relating to permits and fees, sidewalk and pavement cuts, utility location, construction coordination, surface restoration, and other requirements on the use of the rights-of-way. All persons obtaining a permit shall provide the city manager certificates of insurance showing proof of liability coverage for personal injury and property damage, as required herein.

(e) *Stop work orders.* Any ROW user found to be working without a permit, failing to provide for required safety and traffic control measures, or otherwise violating any requirements herein, may be directed to stop work until the necessary permit is obtained, the appropriate measures are implemented, or violations are discontinued or remedied in accordance with this article.

(Ord. No. 4108, art. 8, 3-1-10)

## Sec. 24-96. Permit conditions.

The following conditions shall apply to all excavation and facilities maintenance and to all permits issued under this article unless specifically stated otherwise in the permit:

(a) *City specification; applicable codes.* All excavations and facilities maintenance shall comply with the city standard specifications as may be amended from time to time by the authority of the city manager establishing such specifications and procedures consistent with the requirements and purposes of this chapter. A ROW user shall perform all excavations or facilities maintenance in full compliance with all applicable engineering codes adopted or approved by the city and in accordance with applicable statutes of the State of Missouri, and the rules and regulations of the PSC and any other local, state or federal agency having jurisdiction over the parties. A ROW user shall be responsible for all excavations or facilities maintenance done in the rights-of-way pursuant to its permit, regardless of by whom the excavation or facilities maintenance is done.

(b) *Permit-specific conditions.* Each permit shall be deemed to incorporate the provisions of this article as permit conditions. The city manager may also impose reasonable conditions upon the issuance of a permit and the performance of the ROW user in order to protect the public health, safety and welfare, to ensure the structural integrity of the rights-of-way, to protect the property and safety of other users of the rights-of-way, and to minimize the disruption and inconvenience to the traveling public. Such reasonable conditions may include, but are not limited to:

(1) The amount of excavation or facilities maintenance which may occur at one (1) time and the amount of rights-of-way which may be obstructed during construction;

(2) The number or size of conduits or other facilities that may be installed by each ROW user based on the reasonable needs to ensure that no one (1) ROW user may unreasonably consume a disproportionate amount of the available rights-of-way to deter competition or deprive the public or others of the reasonable use of the rights-of-way;

(3) Posting of an additional or larger performance and maintenance bond for additional facilities, except as otherwise provided in section 24-104 hereof, when the established amount is reasonably determined to be insufficient;

(4) The design, location, and nature of all facilities based on nondiscriminatory bases in ensuring the safe, efficient and appropriate use of the ROW consistent with this article and applicable law;

(5) Other reasonable conditions regarding the timing, safety precautions, or specific implementation of the specific work proposed.

(c) *Responsible for costs.* A ROW user shall be responsible for all reasonable costs borne by the city that are directly associated with a ROW user's permit or use of the rights-of-way thereunder.

(d) *Stop work orders.* Except in cases of an emergency or with approval of the city manager, no excavation or facilities maintenance may be done in violation of a stop work order issued by the city manager if in his or her determination conditions are unreasonable for such excavation or facilities maintenance based on standard engineering and construction practices.

(e) *No interference with ROW uses.* A ROW user shall not disrupt rights-of-way such that the natural free and clear passage of water through the gutters or other waterways is interfered with. No person may park private vehicles within or next to the facilities maintenance or excavation area, except for such areas which may be designated and marked as safe areas for vehicle parking in accordance with an approved traffic control plan.

(f) *Responsible for subcontractors.* If excavation or facilities maintenance is being done for the ROW user by another person, a subcontractor or otherwise, the ROW user shall be responsible for ensuring that the excavation or facilities maintenance of said person is performed consistent with its permit and applicable law and shall be responsible for promptly correcting acts or omissions by said person.

(g) *Minimum impact required; no interference.* The ROW user shall, in the performance of any excavation or facilities maintenance required for the installation, repair, maintenance, relocation and/or removal of any of its facilities, limit all excavations or facilities maintenance to that necessary for efficient operation and so as not to interfere with other users of the rights-of-way.

(h) *Open excavations; street-plate bridging.* The ROW user shall not permit an excavation to remain open or facilities maintenance actions to continue in the rights-of-way longer than is necessary to complete the repair or installation or action, and in no event may an excavation or facilities maintenance remain open or continue beyond the expiration of the permit or any approved extension. Any excavation left open overnight on any thoroughfare or collector type street shall be securely covered. Unless otherwise approved by the city manager in writing, all excavations shall be filled in or covered at the end of each working day. The ROW user assumes the sole responsibility for maintaining proper barricades, plates, safety fencing and/or lights as required from the time of opening of the excavation until the excavation is surfaced and opened for travel. Street plate bridging (SPB) to cover open excavations shall be authorized subject to requirements contained in the standard specifications.

(i) *Barricades and safety devices.* All excavations and facilities maintenance shall be barricaded in such a manner as to protect both pedestrians and vehicular traffic. Such excavations, facilities maintenance and barricades shall be lighted at night with danger signals in such a manner that all traffic may be warned of the existence and location of such excavations, facilities maintenance and barricades. All traffic control devices shall be in compliance with the current version of the standard specifications and the Manual of Traffic Control Devices (MUTCD), unless otherwise agreed to by the city. All surplus excavation materials, tools or supplies at the site of the excavation or facilities maintenance shall be barricaded and lighted at night in the manner described in this section. No open excavation may be left in the pavement area without placing street plates over the opening.

(j) *Traffic control.* Whenever there is an excavation or facilities maintenance by the ROW user, the ROW user shall be responsible for providing adequate traffic control to the surrounding area as determined by the city manager. In the event the excavation or facilities maintenance is not completed in a reasonable period of time, the ROW user may be liable for actual damages to the city for delay caused by the ROW user pursuant to this article.

(k) *Hours of activity.* Nonemergency excavations or facilities maintenance on arterial and collector streets may not be performed during the hours of 7:00 a.m. to 8:30 a.m. and 4:00 p.m. to 6:00 p.m., in order to minimize disruption of traffic flow. The ROW user shall perform excavations or facilities maintenance on the rights-of-way at such times that will allow the least interference with the normal flow of traffic and the peace and quiet of the neighborhood, and shall not work between the hours of 11:00 p.m. and 6:00 a.m.

(l) *Location of facilities; undergrounding.*

(1) All underground mains and service lines with ancillary appurtenances thereto shall, wherever practicable, be placed between the curb or pavement edge and sidewalk line in the section of the street known as the parkway. Where the pavement and sidewalk occupy the entire street, the underground utilities shall be located under the sidewalk, unless otherwise directed by the city.

(2) Except as provided herein, all facilities constructed after the date of this article shall be placed underground. Facilities may be located above ground if approved by the city manager for good cause or as may otherwise be specifically authorized in a franchise or ROW agreement consistent with law. Aboveground facilities may be installed if approved by the city manager where alternative underground facilities are not technically or economically feasible, or where the imposition of such additional costs of undergrounding on the ROW user are precluded by applicable law.

(m) *Notice of completion.* The ROW user shall notify the office of the city manager upon completion of the excavation or facilities maintenance authorized by the permit.

(n) *Guarantee of work.* Every person to whom an excavation permit has been granted shall guarantee for a period of four (4) years the restoration of the rights-of-way in the area where such person conducted an excavation and performed the restoration. Such person shall guarantee and pay for the restoration of the rights-of-way against sagging, buckling, deterioration and other premature failures of the restoration.

(o) *Tree trimming.* A ROW user shall neither remove, cut, nor damage any trees, or their roots, in and along the rights-of-way of the city except as authorized by the city pursuant to an approved tree trimming plan authorized by an excavation or facilities maintenance permit. Tree trimming and pruning may be permitted to occur only after prior written notice to the city of the extent of trimming and pruning to be performed and the prior written approval thereof by the city. The type and extent of trimming and pruning shall be in accordance with the requirements of the city as provided in article II of this chapter.

(Ord. No. 4108, art. 8, 3-1-10)

## Sec. 24-97. Inspection and acceptance of excavations after backfilling and settlement.

When an excavation has been made within the limits of any street, alley or sidewalk and after the same has been properly backfilled, the person making the excavation shall notify the city manager that the same is ready for final repair. The city manager or his duly authorized agent shall immediately inspect the same, and if he finds that such excavation has been properly backfilled, the permit holder shall complete the restoration of the surface of such street, alley or sidewalk, all in accordance with the city's standard specifications for street restoration. The judgment of the city manager or his authorized agent as to when an excavation has been properly backfilled to permit final repair shall be conclusive.

(Ord. No. 4108, art. 8, 3-1-10)

## Sec. 24-98. Final repair of excavations; specifications; city restoration.

After inspection and acceptance of excavation by the city manager, the permit holder shall be responsible for restoration of the excavation pursuant to the standard specifications, to be completed prior to expiration of the permit. If the excavation or other facilities maintenance is not properly completed and restored by the expiration of the permit duration, the city may, in addition to all other remedies, perform the restoration and completion and obtain reimbursement for such costs from the permit holder or surety, provided that if the city provides an invoice to the permit holder for such restoration, such invoice shall be paid in not more than thirty (30) days of such invoice.

(Ord. No. 4108, art. 8, 3-1-10)

## Sec. 24-99. Permit displayed.

Permits issued shall be available by the ROW user at all times at the indicated work site and shall be available for inspection by the city manager, other city employees and the public.

(Ord. No. 4108, art. 8, 3-1-10)

## Sec. 24-100. Permit denial.

The city manager may deny an application for a permit if:

(a) The ROW user, or any persons acting on the behalf of the ROW user, fails to provide all the necessary information requested by the city for managing the public rights-of-way.

(b) The ROW user, or any persons acting on the behalf of the ROW user, including contractors or subcontractors, has a history of noncompliance or permitting noncompliance within the city. For purposes of this section, "history of noncompliance or permitting noncompliance within the city" shall include where the ROW user, or any persons acting on the behalf of the ROW user, including contractors or subcontractors, has failed to return the public rights-of-way to its previous condition under a previous permit.

(c) The city has provided the ROW user with a reasonable, competitively neutral, and nondiscriminatory justification for requiring an alternative method for performing the excavation or facilities maintenance identified in the permit application or a reasonable alternative route that will not result in additional installation expense of more than ten (10) percent to the ROW user or a declination of service quality.

(d) The city determines that the denial is necessary to protect the public health and safety, provided that the authority of the city does not extend to those items under the jurisdiction of the PSC, such denial shall not interfere with a ROW user's right of eminent domain of private property, and such denials shall only be imposed on a competitively neutral and nondiscriminatory basis. In determining whether denial of a permit application is necessary to protect the public health and safety, the city manager may consider one (1) or more of the following factors:

(1) The extent to which the rights-of-way space where the permit is sought is available, including the consideration of competing demands for the particular space in the rights-of-way, or other general conditions of the rights-of-way.

(2) The applicability of any ordinance, code provision, or other regulations that affect the location of facilities in the rights-of-way.

(3) The degree and nature of disruption to surrounding communities and businesses that will result from the use of that part of the rights-of-way, including whether the issuance of a permit for the particular dates and/or times requested would cause a conflict or interfere with an exhibition, celebration, festival, or any other event.

(e) The area is environmentally sensitive as defined by state statute or federal law or is a historic district designated by city ordinance.

(f) The failure to comply with applicable city ordinances or any other violation, unsafe conditions, or damage or threatened harm to the rights-of-way or public, except where such circumstance would otherwise not constitute a lawful basis for revocation of a permit.

(Ord. No. 4108, art. 8, 3-1-10)

## Sec. 24-101. Deposit with city manager.

Unless otherwise provided by law, a ROW user shall submit a deposit with the city manager sufficient in amount to ensure payment for the proper repair of such excavation in accord with the terms of this Code and other city ordinances and to insure and protect the city from all damage that may arise from such excavations prior to acceptance by the city, after proper backfilling. Such deposits shall be returned one hundred eighty (180) days after the excavation has been backfilled and after an inspector has reported the excavation to have been properly repaired. Any party claiming exemption from the requirements of this subsection shall, prior to the subject excavation, so state in writing to the city, setting forth the factual and legal basis for such exemption in verified form.

(Ord. No. 4108, art. 8, 3-1-10)

### Sec. 24-102. Permit fees; supplemental deposit.

(a) *Permit fee.* Every person required to obtain a permit shall pay a fee to the city for such permit in accordance with the fee schedule on file with the city manager to reimburse the city for its actual costs incurred and anticipated from the permit, inspections and applicant's use of the rights-of-way, and including the city's rights-of-way management costs and as may otherwise be permitted by law.

(b) *Supplemental review deposit.* Where the permit application requires investigation, inspection, studies, review or other costs in excess of the permit fee to be incurred by the city to reasonably determine, enforce or condition compliance with the applicable requirements, the city manager may require, subject to other applicable requirements, that an estimated payment for such additional costs be submitted before the application is deemed complete. Any portion of such additional deposit above actual costs incurred by the city therein shall be returned to the applicant upon completion of the application and project upon written request of the applicant.

(Ord. No. 4108, art. 8, 3-1-10)

### Sec. 24-103. Map and location.

Where an application is made for a permit by a ROW user to install or repair its facilities, the applicant shall submit a map or plat of where the excavation or facilities maintenance is to take place. Such plat or map shall be specific as to location and depth of the excavation or facilities maintenance, as to street address or other location. For excavations or facilities maintenance involving streets or curbs, a traffic control plan shall be needed and approved by the city manager before beginning work. Persons who obtain a bulk facilities maintenance permit shall provide such information to the city relating to facilities maintenance prior to performing facilities maintenance in the rights-of-way. Unless otherwise approved by the city manager, such notice shall be provided to the city in writing at least two (2) business days in advance of the work, and shall be subject to denial or modification by the city manager based on public safety or other requirements in this chapter.

(Ord. No. 4108, art. 8, 3-1-10)

### Sec. 24-104. Liability insurance, performance and maintenance bond requirement.

Except as provided in this section, each ROW user shall provide, at its sole expense, and maintain during the term of an agreement or franchise, commercial general liability insurance with a reputable, qualified, and financially sound company licensed to do business in the State of Missouri, and unless otherwise approved by the city, with a rating by Best of not less than "A", that shall protect the ROW user, the city, and the city's officials, officers, and employees from claims which may arise from operations under an agreement or franchise, whether such operations are by the ROW user, its officers, directors, employees and agents, or any subcontractors of the ROW user. This liability insurance shall include, but shall not be limited to, protection against claims arising from bodily and personal injury and damage to property, resulting from all ROW user operations, products, services or use of automobiles, or construction equipment. The amount of insurance for single limit coverage applying to bodily and personal injury and property damage shall be at least two million five hundred thousand dollars ($2,500,000.00), but in no event less than the individual and combined sovereign immunity limits established by RSMo § 537.610 for political subdivisions; provided that nothing herein shall be deemed to waive the city's sovereign immunity. An endorsement shall be provided which states that the city is listed as an additional insured and stating that the policy shall not be cancelled or materially modified so as to be out of compliance with the requirements of this section, or not renewed without thirty (30) days' advance written notice of such event being given to the city manager. If the person is self-insured, it shall provide the city proof of compliance regarding its ability to self-insure and proof of its ability to provide

coverage in the above amounts. The insurance requirements in this section or otherwise shall not apply to a ROW user to the extent and for such period during an agreement or franchise as ROW user is exempted from such requirements pursuant to RSMo § 67.1830(6)(a) and has on file with the city clerk an affidavit certifying that ROW user has twenty-five million dollars ($25,000,000.00) in net assets and is otherwise therefore so exempted unless otherwise provided by agreement or franchise. The city reserves the right to waive any and all requirements under this section when deemed to be in the public interest.

Except as otherwise may be required by law for ROW users who have on file with the city clerk an affidavit certifying that the ROW user has twenty-five million dollars ($25,000,000.00) in net assets and is otherwise therefore so exempted, the person shall at all times during the term of the permit, and for four (4) years thereafter, maintain a performance and maintenance bond in a form approved by the city attorney. The amount of the bond will be five thousand dollars ($5,000.00) or the value of the restoration as determined by the city manager, whichever is greater, for a term consistent with the term of the permit plus four (4) additional years, conditioned upon the person's faithful performance of the provisions, terms and conditions conferred by this chapter. Unless otherwise established in the permit, an annual bond in an amount of fifty thousand dollars ($50,000.00) automatically renewed yearly during this period shall satisfy the requirement of this section. The city shall be entitled to recover under the terms of such bond the full amount of any loss and damage occasioned from violation of the permit or provisions of this article.

A copy of the liability insurance certificate and performance and maintenance bond must be on file with the city clerk.

(Ord. No. 4108, art. 8, 3-1-10)

## Sec. 24-105. Facility relocation.

(a) A ROW user shall promptly remove, relocate or adjust any facilities located in the rights-of-way or in public easements as directed by the city manager for a public improvement or as necessary to eliminate a threat to public safety. Such removal, relocation or adjustment shall be performed by the ROW user at the ROW user's sole expense without expense to the city, its employees, agents, or authorized contractors and shall be specifically subject to rules, regulations and schedules of the city pertaining to such. The ROW user shall proceed with the removal, relocation, or adjustment of facilities with due diligence upon notice by the city manager to begin removal, relocation, or adjustment. Where the ROW user facilities are located in whole or in part in private easements, the ROW user shall promptly relocate the facilities if the city has agreed to compensate the ROW user, through the condemnation, purchase process, or other reasonable means for the cost of relocation of the ROW user's facilities.

(b) The city shall provide the ROW user with written notice of required relocations or adjustments, the anticipated bid letting date, if any, of the public improvement, and notice of the deadline for completion of the relocations or adjustments. The ROW user shall respond within ten (10) days with any conflicts and a proposed construction schedule for relocation to be completed in not more than sixty (60) days from date of the notice to ROW user, unless such other schedule is requested and reasonably approved by the city manager. If facilities cannot be fully relocated within rights-of-way, the ROW user shall be responsible at its own cost to obtain alternative locations to timely relocate its facilities.

(c) If any facilities are not relocated in accordance with this section, the city or its contractors may relocate the facilities after notice to the ROW user. The ROW user and its surety shall be liable to the city for any and all costs incurred by the city. In the event the ROW user is required to move its facilities in accordance with this section, any ordinary permit fee shall be waived. Failure to comply with the relocation schedule set by the city manager shall be a separate violation for each day subject to penalties as provided for violation of this article.

(Ord. No. 4108, art. 8, 3-1-10)

### Sec. 24-106. Rights-of-way vacation.

The city retains the right to vacate any rights-of-way within the city. The city may condition vacation of its rights-of-way on granting and recording of an acceptable easement authorizing the city to use the vacated area, or a portion thereof, for specific purposes as may be deemed appropriate in the public interest. The city may also condition such vacation on payment of any relocation costs that may result from such vacation. In the event that the vacation of rights-of-way requires relocation of facilities of a ROW user, such user shall bear all costs of relocation or removal of its facilities unless otherwise provided by the party initiating the vacation. In no event shall the city be obligated to pay for relocation costs due to a vacation of rights-of-way.

(Ord. No. 4108, art. 8, 3-1-10)

### Sec. 24-107. Abandoned and unusable facilities.

(a) A person owning abandoned facilities in the rights-of-way must remove its facilities and replace or restore any damage or disturbance caused by the removal at its own expense. The city manager may allow underground facilities or portions thereof to remain in place if the city manager determines that it is in the best interest of public safety to do so.

(b) At such time, the city may take ownership and responsibility of such vacated facilities left in place; or the person shall provide information satisfactory to the city that such person's obligations for its facilities in the rights-of-way have been lawfully assumed by another authorized entity; or submit to the city a proposal and instruments for transferring ownership of its facilities to the city. If the person proceeds under this section, the city may, at its option purchase the equipment, require the person, at its own expense, to remove it, or require the person to post a bond in an amount sufficient to reimburse the city for reasonable anticipated costs to be incurred to remove the facilities.

(c) Facilities of a person who fails to comply with this section, and whose facilities remain unused for two (2) years, shall be deemed to be abandoned, after the city has made a good faith effort to contact the person, unless the city receives confirmation that the person intends to use the facilities.

(d) Abandoned facilities are deemed to be a nuisance. The city may exercise any remedies or rights it has at law or in equity, including, but not limited to, (a) abating the nuisance, (b) taking possession and ownership of the facility and restoring it to a useable function, or (c) requiring the removal of the facility by the person.

(Ord. No. 4108, art. 8, 3-1-10)

### Sec. 24-108. Revocation of permits.

The city may, after reasonable notice and an opportunity to cure, revoke a permit granted to a ROW user, without a fee refund, if one (1) or more of the following occurs:

(a) A material violation of a provision of this article or a permit, including the violation of any provision of this article or of any additional provisions of a specific permit;

(b) An evasion or attempt to evade any material provision of the permit, or the perpetration or attempt to perpetrate any fraud or deceit upon the city or its citizens;

(c) A material misrepresentation of fact in the permit application;

(d) A failure to complete excavation or facilities maintenance by the date specified in the permit, unless a permit extension is obtained or unless the failure to complete the excavation or facilities maintenance is due to reasons beyond the ROW user's control;

(e) A failure to correct, within the time specified by the city, excavation or facilities maintenance that does not conform to applicable national safety codes, industry construction standards, or applicable City Code provisions or safety codes that are no more stringent than national safety codes or provisions, upon inspection and notification by the city of the faulty condition.

If a permit is revoked, the ROW user shall also reimburse the city for the city's reasonable costs, including administrative costs, restoration costs and the costs of collection and reasonable attorneys' fees incurred in connection with such revocation.

(Ord. No. 4108, art. 8, 3-1-10)

## Sec. 24-109. Maintenance of rights-of-way.

(a) *Adjacent property owner duty to maintain.* All property owners, lessees or occupants, and all agents or representatives of such owners, lessees or occupants, shall be obligated and required to maintain, at their own expense, (1) mailboxes, driveways, retaining walls, aprons, sidewalks and greenway areas including, but not limited to, shrubs and grasses, and also (2) structures, incidental uses and other things that are placed on the rights-of-way by owners or designees of property adjacent thereto (collectively referred to as "encroachments") so that the area of the rights-of-way between the property and street is kept in a reasonably safe condition for use in the usual modes by day and night, in compliance with the standard specifications, and is not obstructed or interfered with. Property owners, lessees or occupants and all agents or representatives of such owners, lessees or occupants shall be solely responsible for any damage or repairs to any encroachments caused by work in the rights-of-way by the city and neither the city nor any of its employees, agents or contractors shall be liable for any damage to any encroachments located in the rights-of-way except as may be required by law. Any person seeking to place any such improvement in the rights-of-way shall do so only with city approval, in compliance with all applicable regulations and the standard specifications, and shall be responsible for any damage or costs incurred by the city therefrom. The city manager may establish reasonable procedures and conditions for such incidental uses of the rights-of-way consistent with the purposes of this article.

(b) *Nuisance declared.* Any physical object, including underground items such as private utility lines or other facilities that (1) encroach into, upon, under a rights-of-way and obstructs or interferes with the city's use of such rights-of-way in any manner, (2) are constructed or maintained inconsistent with the standard specifications, this section, or any applicable permit, or (3) makes the use of the rights-of-way unsafe, shall be deemed a public nuisance and any individual responsible for maintaining such physical object under subsection (a) of this section shall be guilty of an ordinance violation. The city shall have the right to remove, abate, or restore any such nuisance in accordance with the provisions of sections 13-31 through 13-37, inclusive, of the City Code and may recover such costs, including, but not limited to, imposition of a tax bill on the adjacent property responsible herein for such encroachments, consistent with such City Code provisions.

(Ord. No. 4108, art. 8, 3-1-10)

## Sec. 24-110. Appeals.

Unless otherwise provided herein or by any other governing ordinance or law, any person aggrieved by a decision, fee or requirement established or made pursuant to this article shall, prior to seeking any judicial or statutory relief, if any, file a written appeal of any such decision, fee or requirement with the board of appeals of the city within fifteen (15) days of such decision or imposition of such fee or

requirement, specifying this provision and including specific details of the alleged claim or grievance, and an evidentiary hearing shall be held on such appeal by the board or its designee to render a final decision. Nothing herein shall deny or preclude any additional applicable appeal remedy that may be granted by federal or state law after such final decision.

(Ord. No. 4108, art. 8, 3-1-10)

### Sec. 24-111. Violations; penalties.

In addition to any other penalties and remedies for violations that may exist in law or equity, any person that violates any provision of this article shall be subject to such penalties as set forth in section 1-8 of the City Code and including a fine of up to five hundred dollars ($500.00) per day for each and every day the violation exists or continues.

(Ord. No. 4108, art. 8, 3-1-10)

## ARTICLE VI. SIDEWALK USES—DEFINITIONS, STANDARDS AND CRITERIA

Sec. 24-112. Definitions.

Sec. 24-113. Where permitted.

Sec. 24-114. Permit required.

Sec. 24-115. General application criteria.

Sec. 24-116. Permit issuance.

Sec. 24-117. Permit renewal and expiration.

Sec. 24-118. Availability of permit.

Sec. 24-119. Fee.

Sec. 24-120. Standards, criteria and conditions.

Sec. 24-121. Sole discretion; no property rights created.

Sec. 24-122. Permit suspension or revocation.

### Sec. 24-112. Definitions.

Words or phrases in this article shall be interpreted so as to give them the same meaning as they have in common usage. However, for the purpose of this article, the following terms shall have the meanings ascribed to them in this section, except where the context clearly indicates a different meaning:

*A-frame sign* means a portable sign where the two (2) sign faces are attached at the top in a hinged fashion to allow the bottom portion of the two (2) faces to spread apart and rest on the ground to support the sign.

*City* means the City of Cape Girardeau, Missouri.

*City manager* means the city manager or his or her designee.

*Permit* means a sidewalk café permit issued pursuant to this article.

*Restaurant* means a food service establishment that is maintained and operated as a place where food and beverages are prepared, served and sold for consumption on the premises.

*Sidewalk* means that portion of the street between the curb lines or the lateral lines of a roadway, and the adjacent property lines, and which is intended for use of pedestrians.

*Sidewalk café* means a use located on a public sidewalk that is associated with the adjacent restaurant, where food and beverages are prepared, served, sold and are delivered for consumption on the sidewalk. A sidewalk café is characterized by tables and chairs and may be shaded by permitted awnings, canopies or umbrellas.

*Sidewalk café items* means tables, chairs, umbrellas, planters, trash receptacles, portable railings, lights and other items associated with the operation of a sidewalk café.

*Sign* means any device visible from a public place that displays either commercial or noncommercial messages by means of graphic presentation of alphabetic or pictorial symbols or representations. Noncommercial flags or any flags displayed from flagpoles or staffs will not be considered to be signs.

*Street* means the entire width between the lines of every way publicly maintained when any part thereof is open to the uses of the public for purposes of vehicular travel.

(Ord. No. 4508, art. 1, 10-21-13)

### Sec. 24-113. Where permitted.

Sidewalk cafés are permitted in the following locations: Broadway between Water Street and Pacific Street, Water Street between Broadway and Independence Street, and Main Street and Spanish Street between Broadway and Merriwether Street.

(Ord. No. 4508, art. 1, 10-21-13)

### Sec. 24-114. Permit required.

No person shall establish a sidewalk café on any sidewalk until a sidewalk café permit has been issued by the city.

(Ord. No. 4508, art. 1, 10-21-13)

### Sec. 24-115. General application criteria.

Application for a sidewalk café permit shall be made to the city on a form provided by the city.

(1) The applicant shall have a valid occupancy permit and a business license for the restaurant serving the proposed sidewalk café.

(2) The applicant shall provide the following information:

a. A site plan showing the proposed layout of the sidewalk café, including the sidewalk, adjacent building, door swings, utility lines, fire hydrants, light poles, benches, trash receptacles, trees, landscaping areas, and other existing features, as well as the proposed sidewalk café items and the proposed pedestrian circulation path. The site plan shall include approximate dimensions.

b. Photographs, drawings and/or manufacturer's brochures for the proposed sidewalk café items.

(Ord. No. 4508, art. 1, 10-21-13)

### Sec. 24-116. Permit issuance.

A sidewalk café permit may be issued to the applicant if the application meets the requirements of this article and shall be subject to the following conditions:

(1) *Effective period.* The permit shall be effective for one (1) year, subject to annual renewal as provided below.

(2) *Hold harmless provision.* The permit shall include an explicit hold harmless provision, agreed to by the applicant, holding the city harmless from any and all liability arising out of the issuance of a sidewalk café permit and the operation of the sidewalk café.

(3) *Site plan controlled.* The permit shall be specifically limited to the area and items shown on the approved site plan and other materials attached to the application and made part of the permit.

(4) *Permit not transferrable.* The permit shall not be transferred or assigned.

(5) *Compliance with standards.* No permit shall be issued for a sidewalk café that does not or cannot comply with the requirements for standards, criteria and conditions in section 24-120

(6) *Changes after permit issuance.* Any new items which a permit holder desires to install after permit issuance, but not included on the approved site plan, are subject to approval by city manager.

(Ord. No. 4508, art. 1, 10-21-13)

### Sec. 24-117. Permit renewal and expiration.

Renewals of permits shall be made on January 1 of each year. A permit that has expired longer than ninety (90) calendar days shall require re-application in the same manner as the initial application under this article.

(Ord. No. 4508, art. 1, 10-21-13)

### Sec. 24-118. Availability of permit.

A permit issued under this article shall be available at reasonable times for public inspection.

(Ord. No. 4508, art. 1, 10-21-13)

### Sec. 24-119. Fee.

The annual fee for a sidewalk café permit shall be payable at the time of the application or renewal, in addition to any late fees imposed. The amount of the fees charged is established in the fee schedule.

(Ord. No. 4508, art. 1, 10-21-13)

### Sec. 24-120. Standards, criteria and conditions.

The following standards, criteria and conditions shall apply to the establishment and operation of sidewalk cafés:

(1) The permittee shall, at all times, comply with city ordinances and State statures, as well as applicable rules and regulations pertaining to the handling of food and the operation of a restaurant.

(2) Sidewalk cafés are restricted to the sidewalk frontage of the building where the restaurant or food establishment is located. Sidewalk cafés shall be arranged and operated to permit a free flow of pedestrian access on the sidewalk.

(3) Sidewalk cafés shall be arranged in such a manner that an unobstructed path of not less than sixty (60) inches, exclusive of the width of the curb, is maintained at all times, or shall comply with the Americans with Disabilities Act requirements, whichever is greater. Umbrellas that extend into the walking areas shall be eighty (80) inches in height above the walking surface at its lowest point, or shall comply with the Americans with Disabilities Act requirements, whichever is greater.

(4) Sidewalk cafés shall be arranged such that no table, chair, or other furniture or equipment is within three (3) feet of a bus stop, fire hydrant, non-pedestrian alleyway, pedestrian crosswalk or accessible curb cut.

(5) Sidewalk café items shall be of a quality, design, materials, size, elevation and workmanship that ensures the safety and convenience of users.

(6) Tables, chairs, umbrellas and other sidewalk café furniture shall be fire-retardant, pressure-treated or manufactured of fire-resistant material.

(7) Sidewalk café items shall be maintained with a clean appearance and shall be in good repair at all times.

(8) For any establishment serving alcohol, a simple architectural railing around the perimeter of the café area, which shall be sturdy in weight and design and capable of standing by itself shall be provided. The material and appearance of the railing is subject to city review and approval. Such railing shall be three (3) to four (4) feet in height.

(9) The area covered by the permit, including the sidewalk, curb and gutter immediately adjacent to it and all sidewalk frontage of the restaurant for which the permit is issued, shall be maintained in a neat and orderly appearance at all times by the permittee. The permittee is responsible for regular removal of any rust or other substances adversely affecting the surface or appearance of the sidewalk, curb and gutter, or replacement of such improvements when the railing or other materials are removed.

(10) In addition to other signs permitted by Chapter 25 of the City Code, a maximum of one (1) A-frame sign shall be permitted per sidewalk café. Such sign shall comply with the requirements as set forth in Chapter 25 of the City Code. The A-frame sign shall be limited to displaying a menu and/or specials offered by the sidewalk café. In addition, a sidewalk café may display its name and/or logo on the A-frame sign and on table umbrellas located within the area covered by the sidewalk café permit. No other advertising shall be permitted on the A-frame sign or the table umbrellas. Sidewalk café signs shall be subject to city approval as part of the application for a sidewalk café permit.

(11) The city manager may require the temporary removal of sidewalk cafés for special events, or when construction or maintenance is necessary in the street or right of way. The city shall not be responsible for sidewalk café fixtures relocated at the city manager's discretion.

(12) Sidewalk café items shall not be attached, chained or in any manner affixed to any tree, post, sign or other fixture, curb or sidewalk. Storage of sidewalk café items shall not be permitted in any portion of the street or right of way after the permitted hours of operation of the sidewalk café.

(13) No cooking or fire apparatus shall be allowed in the sidewalk café.

(14) Portable heaters are permitted in the sidewalk café, subject to review and approval by the fire department.

(15) The permittee shall abide by the noise ordinance. In addition, the city manager has the authority to address additional conditions related to businesses adjacent to the permitted area.

(16) The permitted hours of operation for a sidewalk café shall be from 6:00 a.m. until 11:00 p.m. or thirty (30) minutes after last food service, whichever is earlier.

(17) Prohibition of drinking in public places shall not be enforceable against patrons of a duly permitted sidewalk café so long as open containers of alcohol remain within the permitted area and are only available for consumption during the sidewalk café's hours of operation. The operation shall meet all city and State requirements for the sale and serving of alcoholic beverages.

(18) A permittee under this section shall have the rights to occupy and use the area described in the permit for the purposes therein stated, and to enforce those rights through applicable law, including the authority to remove unwanted individuals from the premises.

(19) Sidewalk cafés shall be maintained in a reasonable, safe and sanitary manner, free of any debris and insanitary materials. The permittee shall implement procedures to prevent the breakage of dishes, glasses, and other fragile items. Tables within the permitted area shall be cleared of dirty dishes, glasses, napkins, utensils and other dining materials as soon as reasonably practicable. The permitted area shall be left in a clean and orderly condition following the close of the business of each day.

(20) The permittee shall supervise and control the sidewalk café, and ensure that no nuisance, disturbance, unruly or offensive conduct, or loud or offensive noise occurs or emanates thereon or therefrom. Should any of these events occur on the permitted area, the permittee shall take immediate action to resolve and terminate the event.

(21) The permittee is not allowed to use public trash receptacles for disposal of trash generated by the sidewalk café.

(Ord. No. 4508, art. 1, 10-21-13)

## Sec. 24-121. Sole discretion; no property rights created.

This permit is issued at the sole discretion of the city manager, and continues in effect at his or her pleasure. Issuance of a sidewalk café permit shall not create a property right in the permitted area for any purpose, and a permittee shall not be entitled to re-issuance of any such permits in the future. The city manager at his or her sole discretion may interrupt the sidewalk café permit by authorizing a special event permit, parade permit, or other use of the subject premises, which use or uses shall supersede any use permitted by this article. The permittee shall have no right to recover for loss of business expectancy, based on the expiration, interruption, suspension or revocation of any such permit, or for any other reason.

(Ord. No. 4508, art. 1, 10-21-13)

## Sec. 24-122. Permit suspension or revocation.

The city manager may inspect sidewalk cafés to determine compliance with this article. The city manager may suspend or revoke a permit for any sidewalk café if it is determined that:

(1) Any required occupancy permit, business license, liquor license, or health permit has been suspended, revoked or canceled;

(2) Permittee violates any section of this Code; or

(3) Permittee has failed to correct violations of the City Code of Ordinances within five (5) working days of receipt of the official's notice of same delivered in writing to the permittee.

Upon suspension or revocation of a permit, the city shall give notice of such action to the permittee in writing stating the action which has been taken and the reason therefore. The suspension or revocation shall become effective immediately. Removal of the café and all related items is required during suspension or revocation, unless otherwise approved by the city manager.

(Ord. No. 4508, art. 1, 10-21-13)

# Chapter 25 DEVELOPMENT CODE [1]

ARTICLE I. - GENERAL PROVISIONS

ARTICLE II. - OFF-STREET PARKING REGULATIONS

ARTICLE III. - EXTERIOR LIGHTING STANDARDS

ARTICLE IV. - BILLBOARDS

ARTICLE V. - SIGNS

ARTICLE VI. - FENCES

ARTICLE VII. - RETAINING WALLS

ARTICLE VIII. - LANDSCAPING AND BUFFERYARDS

ARTICLE IX. - STREETS

ARTICLE X. - ACCESS MANAGEMENT

ARTICLE XI. - UTILITIES

ARTICLE XII. - SUBDIVISIONS

ARTICLE XIII. - SITE PLANS AND IMPROVEMENT PLANS

---

FOOTNOTE(S):

---

--- (**1**) ---

**Editor's note—** Article 1 of Ord. No. 4149, adopted Aug. 16, 2010, repealed and reenacted ch. 25 to read as herein set out. Former ch. 25 pertained to subdivision regulations, was comprised of §§ 25-1—25-95, and derived from ch. 25 of the 1967 Code; Ord. No. 661, adopted Feb. 1, 1989; Ord. No. 965, adopted Jan. 16, 1991; Ord. No. 1166, adopted May 18, 1992; Ord. No. 2199, adopted July 21, 1997; Ord. No. 2275, adopted Nov. 17, 1997; Ord. No. 2311, adopted Jan. 5, 1998; Ord. No. 2648, adopted Jan. 3, 2000; Ord. No. 2826, adopted Dec. 18, 2000; Ord. No. 3048, adopted Sept. 16, 2002; Ord. No. 3451, adopted Feb. 22, 2005; and Ord. No. 3618, adopted Feb. 6, 2006. (Back)

**Cross reference—** Buildings, ch. 7; floodplain management regulations, ch. 12; health and sanitation, ch. 13; licenses and business regulations, ch. 15; streets and sidewalks, ch. 24; mobile home parks, ch. 27; urban redevelopment, ch. 28; water and sewers, ch. 29; zoning, ch. 30; standards for subdivision proposals under floodplain management regulations, § 12-68; stormwater management system design requirements, § 23-10. (Back)

**State Law reference—** Subdivisions and plats, RSMo, § 89.410 et seq., Ch. 445. (Back)

## ARTICLE I. GENERAL PROVISIONS

Sec. 25-101. Short title.

Sec. 25-102. Authority.

Sec. 25-103. Jurisdiction.

Sec. 25-104. Purpose.

Sec. 25-105. Relationship to other provisions of the Code.

Sec. 25-106. Relationship to private restrictions.

Sec. 25-107. Prohibitions.

Sec. 25-108. Applicability.

Sec. 25-109. Violations of prior regulations.

Sec. 25-110. Violations.

Sec. 25-111. Penalties for violations.

Sec. 25-112. Enforcement.

Sec. 25-113. Variances and exceptions.

Sec. 25-114. Fees.

Secs. 25-115—25-200. Reserved.

### Sec. 25-101. Short title.

This chapter shall be known and may be cited as "The Development Code of the City of Cape Girardeau, Missouri" and may be abbreviated as "DC".

(Ord. No. 4149, art. 2, 8-16-10)

### Sec. 25-102. Authority.

By authority of the ordinances of the city council, adopted pursuant to the powers and jurisdictions vested in Article 1 Section 2 and Article 6 Section 19(a) of the Constitution of the State of Missouri and other applicable laws, statutes, ordinances and regulations of the state and the city, the city council adopts these regulations to govern the development of land within the incorporated areas of the city and any areas subject to extra-territorial regulation by the city.

(Ord. No. 4149, art. 2, 8-16-10)

### Sec. 25-103. Jurisdiction.

This chapter shall be effective throughout the corporate limits of the city and on property owned by the city outside the corporate limits of the city. Except where otherwise indicated, the provisions of this chapter shall also apply to the city and all of its agencies.

(Ord. No. 4149, art. 2, 8-16-10)

ARTICLE I. GENERAL PROVISIONS

## Sec. 25-104. Purpose.

The purpose of this chapter is to regulate and control the development of land and matters relating thereto within the city to promote the public safety, health, and general welfare of the community. The provisions of this chapter are intended to promote:

(a) A strong and positive civic image and identity, based on a high quality living and working environment, an attractive physical setting, safety from fire, flood, crime and other dangers, and responsive city services and programs;

(b) A living environment that supports the local population, is adaptable to market demands for diverse types and styles of residential living, accommodates future growth, and maintains and improves the overall quality and character of the city;

(c) A system of quality retail and commercial development that provides local residents with needed goods and services and enhances the city's tax base;

(d) Quality employment opportunities for all segments of the population;

(e) A balanced transportation system that provides for safe and efficient movement of vehicles and pedestrians;

(f) A balance between the natural and man-made environments that preserve and protect natural features while promoting development and redevelopment;

(g) The protection and preservation of existing properties and values from adverse or nonharmonious adjacent property uses.

(Ord. No. 4149, art. 2, 8-16-10)

## Sec. 25-105. Relationship to other provisions of the Code.

(a) *Cross-references*. The use of buildings and land within the city is subject to all other applicable provisions of the City Code as well as this chapter, whether or not the other provisions of the City Code are specifically cross-referenced in this chapter. Cross-references to other provisions of the City Code in this chapter are for the convenience of the reader, and the lack of a cross-reference should not be construed as an indication that other provisions of the City Code do not apply.

(b) *Chapter provides minimum requirements*. In interpreting and applying the provisions of this chapter, each provision shall be construed to be the minimum requirements necessary for the promotion of public health, safety or the general welfare. Whenever this chapter imposes more restrictive standards than are required pursuant to any other statute or local regulation, this chapter shall govern.

(Ord. No. 4149, art. 2, 8-16-10)

## Sec. 25-106. Relationship to private restrictions.

The provisions of this chapter are not intended to affect any deed restriction, covenant, easement or any other private agreement relating to, or restricting, the use of land. Where the provisions of this chapter are more restrictive than any private restriction, the requirements of this chapter shall control. Private restrictions shall not be enforced by the city.

(Ord. No. 4149, art. 2, 8-16-10)

## Sec. 25-107. Prohibitions.

(a) No building or structure shall be erected, constructed, reconstructed, moved or altered, nor shall any building, structure or land be used for any purpose except in accordance with the provision of this chapter and other relevant provisions of the City Code.

(b) Any person may use, occupy, or sell any land or building or authorize or permit the use, occupancy, or sale of land or buildings except in accordance with all of the applicable provisions of this Development Code.

(Ord. No. 4149, art. 2, 8-16-10)

## Sec. 25-108. Applicability.

Those regulations in effect immediately prior to the effective date of this chapter shall be referred to in this chapter as the "previously existing regulations." This chapter shall be referred to either as "these regulations" or the "Development Code."

(Ord. No. 4149, art. 2, 8-16-10)

## Sec. 25-109. Violations of prior regulations.

Except as specifically authorized herein, all violations under the previously existing regulations that exist within the city as of the effective date of this chapter, shall continue to be violations and shall not be considered to be legal, nonconforming situations under this chapter. The city shall have the authority to secure remedies for violations of those regulations to the same extent that it may secure similar remedies for violations of this chapter.

(Ord. No. 4149, art. 2, 8-16-10)

## Sec. 25-110. Violations.

If any building or structure is erected, constructed, reconstructed, altered, converted, moved or maintained, or any building, structure, or land is used in violation of this chapter or regulations made under its authority, the city may institute any proper action or proceedings to prevent the unlawful erection, construction, reconstruction, alteration, conversion, moving, maintenance or use; to restrain, correct or abate the violation; to prevent the occupancy or use of the building, structure, or land; or to prevent any illegal act, conduct, business or use in and to the premises.

(Ord. No. 4149, art. 2, 8-16-10)

## Sec. 25-111. Penalties for violations.

(a) *Violation; penalty.*

(1) Except as otherwise provided in this section, any person violating the provisions of this chapter is guilty of a misdemeanor and upon conviction thereof shall be fined not less than fifty dollars ($50.00) nor more than five hundred dollars ($500.00) for each and every day that such violation continues, or by imprisonment in the city jail for not more than three (3) months, or by both such fine and imprisonment.

(2) The owner or agent of a building or premises in or upon which a violation of any provision of this chapter has been committed or shall exist, or the lessee or tenant of an entire building or entire

premises in or upon which a violation has been committed or shall exist, or the agent, architect, building contractor, or any other person who commits, takes part or assists in any violation or who maintains any building or premises in or upon which such violation shall exist, shall be guilty of a misdemeanor punishable by a fine of not less than fifty dollars ($50.00) and not more than five hundred dollars ($500.00) for each and every day that such violation continues, or by imprisonment in the city jail for not more than three (3) months, or by both such fine and imprisonment.

(3) In addition to the above procedure, the city attorney is also authorized to institute any appropriate action or proceeding to prevent violations of the development code, to restrain, correct, or abate such violations, to prevent the occupancy of buildings, structures, or lands, or to prevent any illegal act, conduct, business, or use in or about such premises. An appropriate action or proceeding shall include, but shall not be limited to, injunctive relief and any other appropriate action at law or in equity.

(Ord. No. 4149, art. 2, 8-16-10; Ord. No. 4282, art. 1, 12-5-11)

### Sec. 25-112. Enforcement.

It shall be the duty of the city manager, or his designee, to administer and enforce the regulations contained herein.

(Ord. No. 4149, art. 2, 8-16-10)

### Sec. 25-113. Variances and exceptions.

Deviations from and exceptions to the standards and requirements of this chapter may be granted by the planning and zoning commission. Requests for variances from the literal provisions of this chapter may be considered by the planning and zoning commission in instances where strict enforcement of this chapter would cause undue hardship due to circumstances unique to the individual property under consideration. The planning and zoning commission may grant such variances only when it is demonstrated that such action will be in keeping with the spirit and intent of this chapter. The planning and zoning commission must determine that the alleged hardship has not been created by any person presently having an interest in the property, and the particular circumstances involved would result in an undue hardship upon the owner as distinguished from a mere inconvenience if the strict letter of the regulations were carried out. The planning and zoning commission may impose conditions in the granting of the variances to insure compliance and to protect adjacent property.

(Ord. No. 4149, art. 2, 8-16-10; Ord. No. 4234, art. 1, 6-6-11)

### Sec. 25-114. Fees.

Reasonable fees sufficient to cover the costs of administration, inspection, publication of notice and similar matters may be charged to applicants for any permits, variances or subdivision fees required in this chapter. The amount of the fees charged shall be established by the city fee schedule, as amended.

(Ord. No. 4149, art. 2, 8-16-10; Ord. No. 4256, art. 1, 8-15-11)

### Secs. 25-115—25-200. Reserved.

## ARTICLE II. OFF-STREET PARKING REGULATIONS

Sec. 25-201. Applicability.

Sec. 25-202. Parking spaces and aisle design.

Sec. 25-203. Required number of spaces.

Sec. 25-204. Other parking requirements.

Sec. 25-205. Improvement of parking areas.

Sec. 25-206. Landscaping.

Sec. 25-207. Shared parking.

Sec. 25-208. Mixed uses.

Sec. 25-209. Location of facilities.

Sec. 25-210. Bicycle and motorcycle parking.

Sec. 25-211. Off-street loading requirements; off-street loading spaces.

Sec. 25-212. Handicapped parking spaces.

Sec. 25-213. Emergency vehicle access.

Secs. 25-214—25-300. Reserved.

### Sec. 25-201. Applicability.

In all zoning districts except the CBD district, all uses established after the effective date of this section shall provide off-street parking solely for the parking of motor vehicles in operating condition of patrons, occupants, or employees in accordance with the following regulations. When an existing structure or use is expanded, or an existing use is changed to a new use, off-street parking shall be provided in accordance with the following regulations for the area or capacity of such expansion. While off-street parking is not required in the CBD zoning district, any off-street parking area provided shall be in conformance with the terms of this article.

(Ord. No. 4149, art. 3, 8-16-10)

### Sec. 25-202. Parking spaces and aisle design.

Parking spaces and aisles shall be arranged to accommodate safe circulation of vehicles and pedestrians. No more than twenty (20) percent of the parking spaces required for a use or development shall be allocated to compact car parking. Compact car parking spaces shall be identified upon the site plan and clearly signed in the parking lot. Parking space and aisle dimensions shall comply with the following table:

| 90° Angle Parking Design | Minimum Dimensions | |
|---|---|---|
| | Compact | Standard |

| | | |
|---|---|---|
| Space width | 7.5 feet | 9.0 feet |
| Space depth | 15.0 feet | 19.0 feet |
| Aisle width | | |
| 1-way | 22.0 feet | 24.0 feet |
| 2-way | 24.0 feet | 24.0 feet |
| Total width, aisle and spaces | | |
| 1-way | 52.0 feet | 62.0 feet |
| 2-way | 54.0 feet | 62.0 feet |

| 45° Angle Parking Design | Minimum Dimensions | |
|---|---|---|
| | Compact | Standard |
| Space width | 7.5 feet | 9.0 feet |
| Space depth | 16.0 feet | 19.0 feet |
| Aisle width | | |
| 1-way | 12.0 feet | 12.0 feet |
| 2-way | 24.0 feet | 24.0 feet |
| Total width, aisle and spaces | | |
| 1-way | 44.0 feet | 50.0 feet |

| | | |
|---|---|---|
| 2-way | 56.0 feet | 62.0 feet |

| 60° Angle Parking Design | Minimum Dimensions | |
|---|---|---|
| | Compact | Standard |
| Space width | 7.5 feet | 9.0 feet |
| Space depth | 16.5 feet | 20.0 feet |
| Aisle width | | |
| 1-way | 15.0 feet | 18.0 feet |
| 2-way | 24.0 feet | 24.0 feet |
| Total width, aisle and spaces | | |
| 1-way | 48.0 feet | 58.0 feet |
| 2-way | 57.0 feet | 64.0 feet |

(Ord. No. 4149, art. 3, 8-16-10)

_____

### Sec. 25-203. Required number of spaces.

| | | Parking Spaces | Stacking Spaces |
|---|---|---|---|
| **Residential Uses** | | | |
| 1. | Single-family, townhouse, | 2 for each dwelling unit | |

| | | | |
|---|---|---|---|
| | manufactured homes and two-family dwellings | | |
| 2. | Multifamily dwellings | | |
| | • Efficiency and one-bedroom dwelling units | 1½ for each dwelling unit | |
| | • Dwelling units with two or more bedrooms | 2 for each dwelling unit | |
| 3. | Dormitories, fraternities, sororities and other student housing | 2 for each 3 occupants based on the designed capacity of the building | |
| 4. | Hotels | 1 for each sleeping room, plus any required for restaurants, bars, meeting rooms, etc. | |
| **Business and Commercial Uses** | | | |
| 5. | Animal hospitals and veterinary clinics | 1 for each 300 square feet of total building floor area | |
| 6. | Banks and financial institutions | 1 for each 300 square feet of total building area | 5 per drive-up window* |
| 7. | Banquet halls | 1 for each 2,000 square feet of total building area | |
| 8 | Barber shops and beauty parlors | 2.5 for each chair | |
| 9 | Bars | 1 for each 75 square feet of total building floor area, or spaces equal to 35 percent of the capacity in persons, whichever is greater | |
| 10 | Bowling alleys | 5 for each alley, plus any required for restaurants, bars, etc. | |

| | | | |
|---|---|---|---|
| 11 | Business or professional offices, except medical and dental offices | 1 for each 350 square feet of total building floor area, or 1 for each employee plus 10 percent additional spaces; plus 1 for each vehicle kept on the premises for the business | |
| 12 | Cleaning and laundry pick-up stores, tailor and dressmaking shops and shoe repair shops: | 1 for each 250 square feet of total building area | 4 per drive-up window* |
| 13 | Convenience stores: | 1 for each 350 square feet of total building floor area, plus 1 for each 2.5 seats of on-site seating, but not less than 10. Service area at gas pumps shall not be counted as parking spaces | 6 per drive-up window* |
| 14 | Drug stores/pharmacies: | 1 for each 200 square feet of total building floor area | 5 per drive-up window* |
| 15 | Furniture and appliance stores: | 1 for each 300 square feet of total building floor area | |
| 16 | Hardware and building supply stores: | 1 for each 300 square feet of total building floor area | |
| 17 | Health/fitness clubs: | 1 for each 200 square feet of total building floor area | |
| 18 | Medical and dental offices and clinics: | 1 for each 250 square feet of total building floor area | |
| 19 | Mortuaries and funeral homes: | 1 for each 4 seats, plus 1 for each employee | |
| 20. | Motor vehicle, mobile home and trailer sales (new and used): | 1 for each 400 square feet of enclosed total building floor area, plus 1 for each 3,000 square feet of open sales lot area | |

| | | | |
|---|---|---|---|
| 21 | Nursing homes, assisted living and residential treatment facilities and transitional housing | 1 for each 4 beds, plus 1 for each employee | |
| 22 | Restaurants | | |
| | • With no pick-up or drive-thru service | 1 for each 80 square feet of total building floor area, or 1 for each 2.5 seats, whichever is greater | |
| | • With pick-up or drive-thru service and on-site seating | 1 for each 70 square feet of total building floor area but not less than 10 | 6 per ordering window/3 per pick-up window* |
| | • With pick-up or drive-thru and no on-site seating | 1 for each employee on the largest shift but not less than 6 | 9 per ordering window/4 per pick-up window* |
| 23 | Retail stores (unless listed separately) | 1 for each 200 square feet of total building floor area or 1 for each 160 square feet of net usable building floor area, whichever requires less parking spaces | |
| 24 | Self-service storage | 1 for each 20 storage units without vehicular access plus 1 for each employee and 2 if a resident manager is present, plus 2 additional at the office | |
| 25 | Shopping centers (regional) | 1 for each 222 square feet of gross leasable area | |
| 26 | Supermarkets and grocery stores | 1 for each 250 square feet of total building floor area | |
| 27 | Theaters | 1 for each 4 seats | |
| 28 | Vehicle fueling stations | 1 for each employee, plus any needed for convenience stores associated with fueling | Any needed for convenience |

| | | | |
|---|---|---|---|
| | | station | stores associated with fueling station |
| 29 | Vehicle service, repair, body shop | 2 for each service bay, plus 1 for each employee | |
| 30 | Vehicle washing establishments | 1 for each employee | 4 for each washing stall |
| **Industrial, Manufacturing and Warehouse Uses** | | | |
| 31 | Manufacturing uses and any establishments engaged in production, processing, cleaning, servicing, testing or repair of materials, goods or products | 2 for each 3 employees on the largest shift, plus 1 for each vehicle kept on the premises | |
| 32. | Railroad terminals, yards, shops and engine houses | 2 for each 3 employees | |
| 33. | Truck terminals | 2 for each 3 employees, plus 1 for each truck or semi-trailer kept on the premises | |
| 34. | Warehouse and storage establishments | 2 for each 3 employees, plus 1 for each 800 square feet of total building floor area in excess of 4,000 square feet and 1 for each vehicle kept on the premises | |
| **Schools, Institutions and Places of Assembly** | | | |
| 35. | Auditoriums, stadiums, gymnasiums, convention halls, and other places of assembly | | |
| | • With fixed seats | 1 for each 4 seats | |

| | | | |
|---|---|---|---|
| | • Without fixed seats | 1 for each 3 persons based upon designed maximum capacity | |
| 36. | Churches, temples, and other places of worship | 1 for each 4 seats | |
| 37. | Colleges, universities, vocational, trade and business schools | 1 for each employee on the largest shift, plus 2 for each 3 commuting students of the largest class attendance period. Parking for dormitories, fraternities, sororities and other living quarters shall be calculated separately | |
| 38. | Daycares | | |
| | • Home | 1 for each employee or staff member, plus any required for the residence | |
| | • Commercial | 1 for each employee and staff member, plus 1 for each 5 individuals being cared for | |
| 39. | Elementary and junior high schools | 2 for each classroom or 1 for each 5 seats of the largest place of public assembly (stadium, auditorium or gym), whichever requires the greatest number of parking spaces | |
| 40. | High schools, or secondary schools | 1 for each 4 students based on the maximum number of students for which the school is designed, plus 2 for each classroom or 1 for each 5 seats of the largest place of public assembly (stadium, auditorium or gym), whichever requires the greatest number of spaces | |
| 41. | Hospitals | 2.5 for each 1 bed for inpatient care facilities and 1 for each 250 square feet of total building floor area for outpatient | |

| | | | |
|---|---|---|---|
| | | facilities | |
| 42. | Libraries, art galleries, and museums | 1 for each 300 square feet of total building floor area | |
| 43. | Parks, playgrounds and athletic fields | 1 for each 5,000 square feet of gross land area or one for each 4 persons at maximum design capacity, whichever is greater | |
| 44. | Private clubs and lodges | 1 for each 3 persons, at maximum design capacity | |

* The number of stacking spaces may be reduced by twenty (20) percent for each additional window provided; however, there shall be at least two (2) stacking spaces at each window.

(Ord. No. 4149, art. 3, 8-16-10)

### Sec. 25-204. Other parking requirements.

For any and all uses or structures not specifically provided for in the foregoing enumeration, such parking spaces as the city manager shall determine necessary, considering all the parking-generating factors involved, but not less than two (2) spaces.

(Ord. No. 4149, art. 3, 8-16-10)

### Sec. 25-205. Improvement of parking areas.

(a) *Grades and drainage.* Parking areas shall be designed to assure positive drainage, but shall not exceed a slope of ten (10) percent; provided that transitional and approach driveways which do not serve directly abutting parking spaces may be designed to a slope of up to fifteen (15) percent, if accompanied by appropriate landing grades and vertical curves at points of transition. Storm drainage control and facilities shall be designed to satisfy the requirements of the storm drainage standards of the city.

(b) *Access.* Ingress and egress shall be only by way of paved driveways or openings as specified in standards contained in article IX, streets. Access driveways shall be free of objects which might interfere with the ability of drivers to see pedestrians and other vehicles.

(c) *Paving, curbs and marking.*

(1) All new and expanded vehicle parking and maneuvering areas in commercial, planned development and multifamily residential zoning districts must be paved with a concrete, asphalt, or permeable/porous pavers or pavement. The use of grass pavers, reinforced gravel, and reinforced turf is allowed and encouraged for use in overflow parking areas, as approved by the

city manager. All new and expanded vehicle parking and maneuvering areas in the front yards in manufacturing zoning districts must be paved with a concrete, asphalt or permeable/porous pavers or pavement. New and expanded vehicle parking and maneuvering areas in the rear and side yards in manufacturing zoning districts may be surfaced with a clean aggregate or gravel if dust control measures are in place. The access driveways to all parking areas must be paved with a concrete surface a minimum of seventy-five (75) feet from the property line. Pavement cross-section shall be determined by the owner based on considerations of durability, subsurface conditions, and the type of vehicles using the parking area.

(2) Parked vehicles shall be prevented from intruding on travel lanes, walkways, public streets, or adjacent properties by means of walls, curbs, wheel stops, or other means.

(3) Parking spaces shall be delineated, and appropriate traffic flow indications given, by use of reflectorized paint on the parking area pavement.

(4) All paving, curbs and markings shall be continuously maintained in good condition, to the above standards, after installation.

(d) *Lighting.* Lights shall be required for all parking areas intended for night use. Lights shall be arranged or shielded to direct illumination away from residences and from public streets and other public areas and meet the requirements of article III, exterior lighting standards.

(Ord. No. 4149, art. 3, 8-16-10)

## Sec. 25-206. Landscaping.

All parking facilities shall comply with article VIII, landscaping and bufferyards.

(Ord. No. 4149, art. 3, 8-16-10)

## Sec. 25-207. Shared parking.

Upon application of the owners, facilities may be shared if multiple uses cooperatively establish and operate parking facilities and if these uses generate parking demands at different times. (For example, if one (1) use operates during evenings and weekends only and other uses operate during weekdays only). The applicant shall have the burden of proof for a reduction in the total number of required parking spaces, and shall provide required documentation. A shared parking arrangement shall be approved by the city manager only if:

(a) A sufficient number of spaces are provided to meet the greater parking demand of the particular uses.

(b) Satisfactory evidence has been submitted by the parties operating the shared parking facility, describing the nature of the uses and times when the uses operate so as to demonstrate the lack of conflict between them.

(c) Additional documents, covenants, deed restrictions, or other agreements as may be deemed necessary by the city manager are executed to assure that the required parking spaces provided are maintained and uses with similar hours and parking requirements as those uses sharing the parking remain for the life of the building.

(Ord. No. 4149, art. 3, 8-16-10)

## Sec. 25-208. Mixed uses.

Generally, in mixed uses, the parking facilities required shall be the sum of the requirements for the various individual uses, computed separately in accordance with this section. Parking facilities for one (1) use shall not be considered as providing the required parking facilities for any other use, except as approved in section 25-207 above.

(Ord. No. 4149, art. 3, 8-16-10)

## Sec. 25-209. Location of facilities.

(a) No parking shall be permitted for non-residential uses within ten (10) feet of an adjoining lot in a residential district, except as otherwise provided by this chapter.

(b) Parking areas for any RE, R-1, R-2, or R-3 district shall only be located upon a driveway providing access to a garage, carport or parking area for a dwelling unit except that a side turnaround space shall be permitted in the required front yard where the dwelling unit has its only access to a street designated as an arterial street. Such side turnaround space shall have an all-weather surface, shall be limited to ten (10) feet in width and twenty (20) feet in length, and shall be connected to the driveway.

(c) Except as otherwise provided in this section, off-street vehicle parking facilities required by this section for all uses except residential may be located either on-premises or within five hundred (500) feet therefrom on appropriately zoned property.

(Ord. No. 4149, art. 3, 8-16-10)

## Sec. 25-210. Bicycle and motorcycle parking.

(a) Bicycle and motorcycle parking reduction allowance. Up to ten (10) percent of required vehicle parking may be substituted with bicycle or motorcycle parking at a rate of two (2) bicycle or motorcycle spaces for each required vehicle space. The reduction allowance is applicable only to parking lots that contain at least ten (10) or more vehicle parking spaces and to the following uses: office, manufacturing, regional shopping centers, colleges and universities, medical centers, and health and fitness centers.

(b) Bicycle parking facilities shall be equipped with either a lockable enclosure (bicycle locker) or a permanent, secure, and stationary structure (bicycle rack) that supports the bicycle frame and to which the frame and both bicycle wheels can be locked (with the removal of the front wheel) or where the frame and one (1) wheel can be locked (if both wheels remain on the bicycle). Each bicycle parking space shall be at least six (6) feet long, two (2) feet wide and shall have a minimum overhead clearance of seven (7) feet. If more than one (1) bicycle rack is used, an access aisle five (5) feet wide at a minimum is required beside or between each row of bicycle racks.

(c) Each motorcycle parking space shall be at least eight (8) feet long, five (5) feet wide and shall have a minimum overhead clearance of seven (7) feet.

(d) Bicycle and motorcycle parking facilities shall be surfaced with all-weather material and maintained in a safe and neat condition. Bicycle and motorcycle parking facilities shall be clearly designated, safely separated from vehicle maneuvering areas, and located near the main and employee entrances to the principle use. Bicycle and motorcycle parking facilities in parking structures shall be located on the ground level.

(Ord. No. 4149, art. 3, 8-16-10)

ARTICLE II. OFF-STREET PARKING REGULATIONS

## Sec. 25-211. Off-street loading requirements; off-street loading spaces.

There shall be provided at the time any building is erected or structurally altered (except as otherwise provided in this section), off-street loading spaces in accordance with the following requirements:

*Number and size of loading spaces*. Loading spaces, a minimum size of ten (10) feet wide by twenty (20) feet long with a minimum vertical clearance of ten (10) feet, shall be provided for new buildings and uses and expansions or modifications of existing uses as shown in the following table:

| Floor Area in Square Feet | Minimum Number of Loading Spaces |
|---|---|
| Office, hotel, institutional, or nursing home | |
| 5,000 to 50,000 | 1 |
| 50,001 to 200,000 | 2 |
| For each additional 75,000 | 1 |
| Retail, service, wholesale commercial uses | |
| 2,000 to 20,000 | 1 |
| 20,001 to 100,000 | 2 |
| For each additional 100,000 | 1 |
| Industrial and manufacturing uses | |
| 1,000 to 10,000 | 1 |
| For each additional 8,000 | 1 |

(Ord. No. 4149, art. 3, 8-16-10)

ARTICLE II. OFF-STREET PARKING REGULATIONS

### Sec. 25-212. Handicapped parking spaces.

Handicapped parking spaces shall be provided in accordance with the American National Standard "Accessible and Usable Buildings and Facilities" manual and the International Building Code currently in effect.

(Ord. No. 4149, art. 3, 8-16-10)

### Sec. 25-213. Emergency vehicle access.

Emergency vehicle access shall be provided in accordance with the International Fire Code currently in effect.

(Ord. No. 4149, art. 3, 8-16-10)

### Secs. 25-214—25-300. Reserved.

## ARTICLE III. EXTERIOR LIGHTING STANDARDS

Sec. 25-301. Purpose.

Sec. 25-302. Exterior lighting objective.

Sec. 25-303. Exterior lighting standards.

Sec. 25-304. Existing lighting.

Sec. 25-305. Exemptions.

Secs. 25-306—25-400. Reserved.

### Sec. 25-301. Purpose.

The purpose of this section is to regulate the placement and arrangement of exterior lighting. These regulations are intended to: protect the public health, safety, and general welfare; enable the fair and consistent enforcement of these regulations; control light spillover and glare; encourage lighting systems which conserve energy and costs; preserve community character; and provide for nighttime safety, utility, security, and productivity.

(Ord. No. 4149, art. 5, 8-16-10)

### Sec. 25-302. Exterior lighting objective.

Lighting arrangements shall be arranged in the following manner:

(a) To minimize light spillover onto any adjacent premises; and

(b) So that light from any illuminated source be so shaded, shielded or directed that the light intensity or brightness will not adversely affect adjoining property.

(Ord. No. 4149, art. 5, 8-16-10)

### Sec. 25-303. Exterior lighting standards.

All exterior lighting upon any premises, regardless of zoning classification, shall be subject to the following conditions and limitation:

(a) When a light source or luminaire does not have a cutoff the following standards shall be met:

(1) Maximum mounting or pole height of the light source or luminaire: Fifteen (15) feet.

(2) Maximum permitted lumination:

a. Three-tenths (0.3) footcandle at any point along the perimeter of the property where it adjoins a residential zoning district or is separated from a residential zoning district by a right-of-way of seventy (70) feet or less.

b. One (1.0) footcandle at any other point along the perimeter of the property.

(b) When a light source or luminaire has total cutoff of light at an angle so that the bare bulb, lamp, or light source is completely and opaquely shielded from the direct view of an observer at ground level at the perimeter of the property, the following standard shall be met:

(1) Maximum mounting or pole height of the light source or luminaire: Sixty (60) feet.

(2) Maximum permitted lumination:

a. One-half (0.5) footcandle at the any point along the perimeter of the property where it adjoins a residential zoning district or is separated from a residential zoning district by a right-of-way seventy (70) feet or less.

b. One (1.0) footcandle at any other point along the perimeter of the property.

(c) Building and landscape light fixtures, including ground lighting for signs, flag poles, and statues, shall be equipped with shields or shutters to minimize spillover. The maximum permitted lumination as a result of reflected light resulting from such fixtures shall be:

(1) One-half (0.5) footcandle at any point along the perimeter of the property where it adjoins a residential zoning district or is separated from a residential zoning district by a right-of-way of seventy (70) feet or less; and

(2) One (1.0) footcandle at any other point along the perimeter of the property.

(d) The maximum permitted average illumination of all parking lots shall be five (5) footcandles.

(e) There shall be no lighting of a blinking, flashing, rotating or fluttering nature, including changes in light intensity, brightness, or color except for public safety purposes.

(f) Light sources or luminaries shall not be located within bufferyard areas except on pedestrian walkways.

(g) A site lighting plan for uses requiring site plan review shall be submitted and shall provide the following information:

(1) Proposed location on premises of all exterior light fixtures.

(2) Description of illumination devices, fixtures, lamps, supports, reflectors, and lens, mounting height and wattage.

(3) Photometric design layout for the site of all illuminated vertical and horizontal surfaces showing the design footcandle levels.

(4) For uses requiring site plan review, lighting shall be significantly reduced during nonoperational building hours, allowing only lighting necessary for security purposes. The lighting plan submitted for review shall note where this distinction occurs.

(Ord. No. 4149, art. 5, 8-16-10)

## Sec. 25-304. Existing lighting.

At such time that at least thirty (30) percent of a property's existing lighting fixtures are moved or replaced, the requirements of this section shall be met.

(Ord. No. 4149, art. 5, 8-16-10)

## Sec. 25-305. Exemptions.

(a) *Outdoor recreational use.* Because of their unique requirements for nighttime visibility and their limited hours of operation, ball diamonds, playing fields, and tennis courts shall be exempt from the exterior lighting standards of section 25-303 above. These outdoor recreational uses must meet all other requirements of this section and of this chapter.

(b) *Private outdoor lights.* Private outdoor lights installed by a public utility on private property for security purposes are exempt from the exterior lighting standards above, provided the installation is approved by all property owners of residential property from which the light source can be viewed directly.

(c) *Public street lighting.* Street lights shall be exempt from the exterior lighting standards above.

(d) *Emergency warning lights.* Safety signals and warning device lighting shall be exempt from the exterior lighting standards above.

(e) *Temporary seasonal/holiday lighting.* Temporary seasonal/holiday lighting is exempt from the exterior lighting standards above.

(f) *Search lights.* Search lights for promotional purposes and special events shall be exempt from the exterior lighting standards above, provided the lights are not located in a residential zoning district and the lights are directed so that they do not illuminate any structure that is not located on the same property as the lights.

(Ord. No. 4149, art. 5, 8-16-10)

**Secs. 25-306—25-400. Reserved.**

## ARTICLE IV. BILLBOARDS

Sec. 25-401. Billboards.

Secs. 25-402—25-500. Reserved.

### Sec. 25-401. Billboards.

Billboards shall be erected only upon approval of a special use permit, as set out in chapter 30, section 30-401. In addition to the requirements of section 30-401, the following regulations apply to the erection of billboards:

(a) Billboards shall be allowed only in the C-2, PD, M-1 and M-2 zoning districts.

(b) Billboards shall be allowed only on parcels of land bordering the following streets:

(1) Interstate 55.

(2) William Street (Route K), west of Kingshighway.

(3) Missouri Route 74, west of Kingshighway.

(4) Kingshighway from Boulder Crest Drive south to Interstate 55.

(c) No billboard shall be placed within fourteen hundred (1,400) feet of another billboard. This paragraph shall not apply to billboards which are located on opposite sides of the street to which the billboard is oriented.

(d) No billboard shall be placed within thirty (30) feet of a street right-of-way.

(e) No billboard shall be placed within one hundred (100) feet of a property line of a property which is used for residential purposes.

(f) For purposes of placing billboards, a V-shaped billboard or a back-to-back type of billboard shall be considered one (1) billboard. Sign faces of less than one hundred fifty (150) square feet may be placed between billboard faces at the apex of the "V" or across the rear of the "V," but no such sign shall be oriented toward a street upon which billboards are not allowed. The angle of all sign faces shall be oriented so that they are between seventy-five (75) degrees and ninety (90) degrees to the street on which the billboard is permitted.

(g) No billboard shall be located in such a manner as to obscure an official traffic sign, signal or device, or obstruct a driver's view of approaching or intersection traffic.

(h) The maximum area of a billboard sign face shall be three hundred (300) square feet. The maximum length of a billboard sign face shall be thirty (30) feet. The maximum total sign face area of a billboard shall be six hundred (600) square feet.

(i) There shall be a minimum clearance of ten (10) feet from grade of the street to which the billboard is oriented to the bottom of a billboard sign face. There shall be a maximum height of thirty (30) feet from grade of the street to which the billboard is oriented to the top of a billboard sign face.

(j) Audio speakers are prohibited in association with any billboard.

(k) Electronic, video or digital billboard images or any portion thereof shall have a minimum duration of at least eight (8) seconds and shall be a static display. No portion of the image may flash, scroll, twirl, change color, or in any manner imitate movement.

(l) Billboards may be illuminated, subject to the following instructions:

(1) No revolving or rotating beam or beacon of light shall be permitted as part of any billboard. Flashing devices shall not be permitted upon a billboard. However, changeable copy signs, such as those used for time and temperature displays, shall be permitted, but shall not be permitted to operate in a flashing or scrolling manner.

(2) External lighting, such as flood lights, thin line and gooseneck reflectors, are permitted, provided the light source is directed on the face of the billboard and is effectively shielded so as to prevent beams or rays of light from being directed into any portion of the street.

(3) The illumination of any billboard within one hundred (100) feet of a property line which is used for residential purposes shall be diffused or indirect in design to prevent direct rays of light from shining into adjoining residential districts.

(4) Electronic, video or digital billboard images shall be equipped with automatic dimming capability that adjusts the brightness to the ambient light at all times of the day and night. The maximum luminance produced by electronic, video or digital billboard images shall not exceed three-tenths (0.3) footcandle greater than the ambient light level.

(m) The following billboards shall not be permitted to remain or to be erected:

(1) Billboards which have been erected without a building permit.

(2) Billboards that employ any stereopticon or motion picture projection, or any portion of which gives the illumination of motion. This includes any electronic graphic signs or video displays, but does not include signs that contain changeable copy, such as time and temperature.

(3) Billboards which are not clean, not in good repair, not structurally sound, or obsolete (billboards shall not be considered obsolete solely because they temporarily do not carry an advertising message).

(4) Billboards which appear to attempt to regulate, warn, or direct the movement of traffic or which interfere with, imitate, or resemble any official traffic sign, signal or device.

(5) Billboards which are erected or maintained upon trees or painted or drawn upon rocks or other natural features.

(6) Billboards which are nonconforming and damaged or destroyed to an extent of more than sixty (60) percent of the replacement cost.

(7) Billboards that prevent ingress or egress from any doors, windows, or fire escapes.

(8) Billboards that are attached to a standpipe or fire escape.

(Ord. No. 4178, art. 1, 12-6-10)

**Secs. 25-402—25-500. Reserved.**

## ARTICLE V. SIGNS

Sec. 25-501. Purpose.

Sec. 25-502. Definitions.

Sec. 25-503. General sign types.

Sec. 25-504. General provisions.

Sec. 25-505. Permits required.

Sec. 25-506. Specific sign requirements.

Secs. 25-507—25-600. Reserved.

### Sec. 25-501. Purpose.

The purpose of this section is to protect the safety and orderly development of the community through the regulation of signs and sign structures.

(Ord. No. 4178, art. 2, 12-6-10)

### Sec. 25-502. Definitions.

The following works and terms shall, for the purposes of this section, have the meanings shown herein:

*Abandoned sign.* Any sign and/or its supporting sign structure which remains without a message or whose display surface remains blank for a period of one (1) year or more, or any sign which pertains to a time, event or purpose which no longer applies, shall be deemed to have been abandoned. Permanent signs applicable to a business temporarily suspended because of a change in ownership or management of such business shall not be deemed abandoned unless the property remains vacant for a period of one (1) year or more. Any sign remaining one (1) year after demolition of a principal structure shall be deemed to be abandoned. Signs which are present because of being legally established nonconforming signs or signs which have required a special use permit or a variance shall also be considered as an abandoned sign.

*A-frame sign.* A portable sign where the two (2) sign faces are attached at the top in a hinged fashion to allow the bottom portion of the two (2) faces to spread apart and rest on the ground to support the sign.

*Architectural projection.* Any projection that is not intended for occupancy and that extends beyond the face of an exterior wall of a building, but that does not include signs as defined herein.

*Awning sign.* A sign displayed on or attached flat against an architectural projection or shelter projecting from and supported by the exterior wall of a building and composed of a covering of rigid or nonrigid materials and/or fabric on a supporting framework that may be either permanent or retractable, including such structures that are internally illuminated by fluorescent or other light sources.

*Banner sign.* A sign utilizing a flexible material on which copy or graphics are displayed.

*Billboard.* See article IV.

*Building elevation.* The entire side of a building, from ground level to the roofline, as viewed perpendicular to the walls on that side of the building.

*Canopy sign.* A sign affixed to the visible surface(s) of a multisided overhead structure or architectural projection supported by columns but not enclosed by walls.

*Copy.* Those letters, numerals, figures, symbols, logos and graphic elements comprising the content or message of a sign, excluding numerals identifying a street address only.

*Development complex sign.* A freestanding sign identifying a multiple-occupancy development, which is controlled by a single owner or landlord, approved in accordance with section 25-506(i) of this chapter.

*Directional sign.* Any sign that is designed and erected for the purpose of providing direction and/or orientation for pedestrian or vehicular traffic.

*Electronic, video, or digital message sign.* A sign capable of displaying words, symbols, figures or images that can be electronically or mechanically changed by remote or automatic means. These signs include, but are not limited to, displays using incandescent lamps, light emitting diodes (LEDs), or liquid crystal displays (LCDs).

*Double-faced sign.* A sign with two (2) faces, back to back.

*Facade.* See *Building elevation.*

*Freestanding sign.* A sign principally supported by a structure affixed to the ground, and not supported by a building, including signs supported by one (1) or more columns, poles or braces placed in or upon the ground.

*Frontage (building).* The length of an exterior building wall or structure of a single premises oriented to the public way or other properties that it faces.

*Frontage (property).* The length of the property line(s) of any single premises along either a public way or other properties on which it borders.

*Garage sale.* Any sale conducted where used or unwanted household items are offered for sale, usually held in the garage, carport or driveway of the seller's home. Also commonly referred to as "yard sales".

*Interior sign.* Any sign placed within a building, including in a window. Interior signs are not regulated by this chapter.

*Menu board.* A freestanding sign oriented to the drive-through lane for a restaurant that advertises the menu items available from the drive-through window, and which has no more than twenty (20) percent of the total area for such a sign utilized for business identification, and which is not regulated by this chapter.

*Monument sign.* A freestanding sign that is above ground level and is anchored to the ground by a solid base, with no open space between the sign and the ground. Such signs may be two-sided, provided that both sides cannot be seen simultaneously from any point.

*Off-premises sign.* See *Outdoor advertising sign.*

*Off-site directional sign.* A sign structure which provides directional assistance to access nonresidential uses conveniently and safely. Such signs shall be limited in area, size, number, height, and placement as identified in section 25-506(i)(2).

*On-premises sign.* A permanent sign erected, maintained or used in the outdoor environment for the purpose of the display of messages appurtenant to the use of, products sold on, or the sale or lease of, the property on which it is displayed.

*Outdoor advertising sign.* A permanent sign erected, maintained or used in the outdoor environment for the purpose of the display of messages not appurtenant to the use of, products sold on, or the sale or lease of, the property on which it is displayed.

*Portable sign.* Any sign not embedded in the ground or permanently affixed to a building or sign structure that is permanently embedded in the ground. Portable signs are considered to be temporary signs.

*Projecting sign.* A sign other than a wall sign that is attached to or projects more than eighteen (18) inches from a building face or wall or from a structure whose primary purpose is other than the support of a sign.

*Real estate sign.* A temporary sign advertising the sale, lease or rental of the property or premises upon which it is located.

*Roof line.* The top edge of a peaked roof or, in the case of an extended facade or parapet, the uppermost point of said facade or parapet.

*Roof sign.* A sign mounted on, and supported by, the main roof portion of a building, or above the uppermost edge of a parapet wall of a building and which is wholly or partially supported by such a building. Signs mounted on mansard facades, pent eaves and architectural projections such as canopies or marquees shall not be considered to be roof signs.

*Sign.* Any device visible from a public place that displays either commercial or noncommercial messages by means of graphic presentation of alphabetic or pictorial symbols or representations. Noncommercial flags or any flags displayed from flagpoles or staffs will not be considered to be signs.

*Sign area.* The area of the sign face. The area of any double-sided or "V" shaped sign shall be the area of the largest single face only. The area of a sphere shall be computed as the area of a circle. The area of all other multiple-sided signs shall be computed as fifty (50) percent of the sum of the area of all faces of the sign.

*Sign face.* The surface upon, against or through which the sign copy is displayed or illustrated, not including structural supports or architectural features of a building or sign structure.

*Temporary sign.* A sign intended to display messages of a transitory or temporary nature.

*V-shape sign.* Signs containing two (2) faces of approximately equal size, erected upon common or separate structures, positioned in a "V" shape with an interior angle between faces of not more than ninety (90) degrees with the distance between the sign faces not exceeding five (5) feet at their closest point.

*Wall or fascia sign.* A sign that is in any manner affixed to any exterior wall of a building or structure and that projects not more than eighteen (18) inches from the building or structure wall.

(Ord. No. 4178, art. 2, 12-6-10)

## Sec. 25-503. General sign types.

Sign types and the computation of sign area shall be as depicted in Figures 1 through 2.

**Figure 1 - General Sign Types**

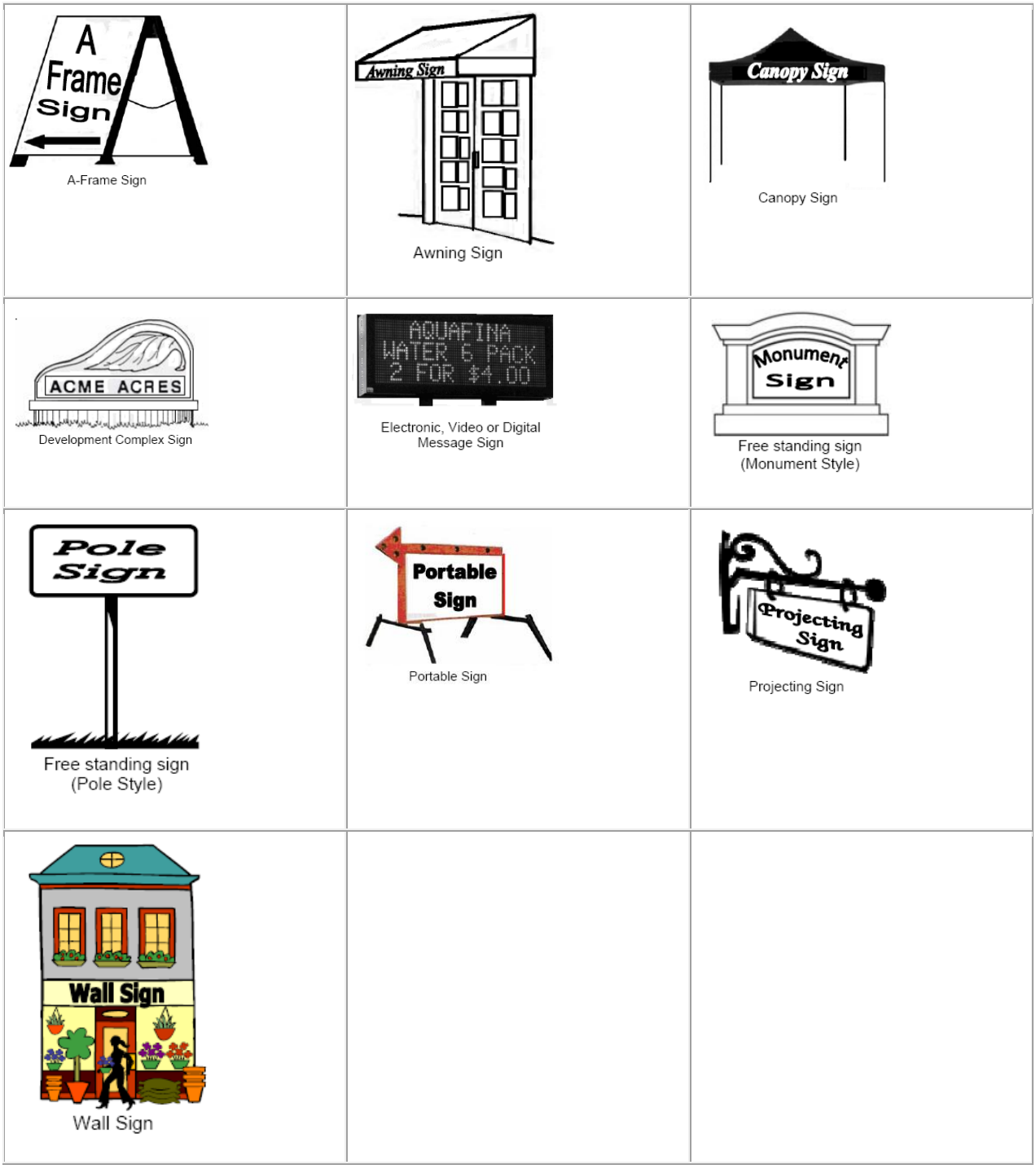


**Figure 2 - Height and Area Computation Methodology**

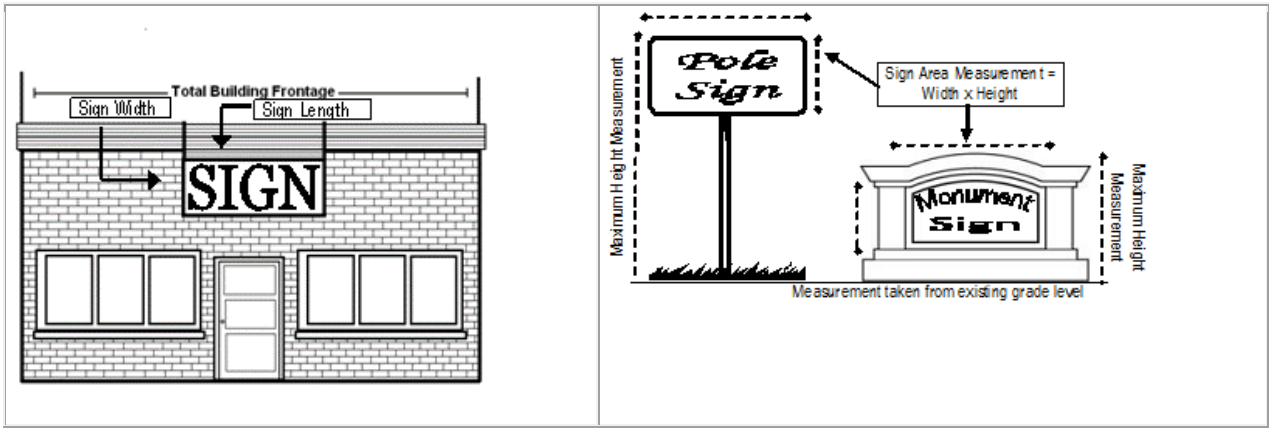


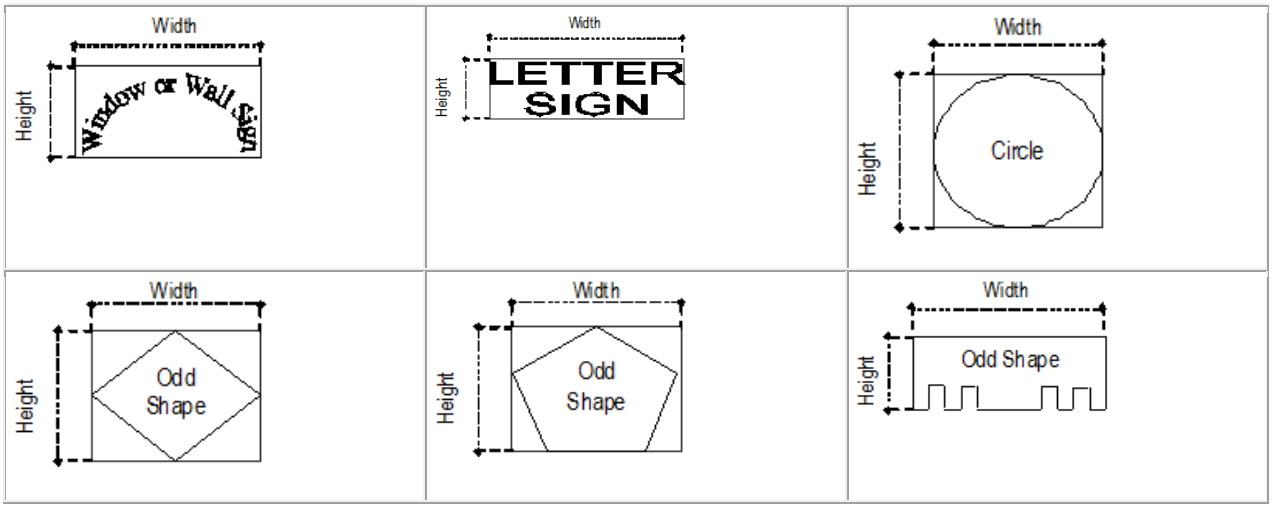


(Ord. No. 4178, art. 2, 12-6-10)

## Sec. 25-504. General provisions.

(a) *Conformance of codes.* Any sign hereafter erected shall conform to the provisions of this article and the provisions of the International Building Code and of any other ordinance or regulations within this city.

(b) *Signs in rights-of-way.* No sign other than an official traffic sign shall be placed within any public right-of-way, unless specifically authorized by other ordinances or regulations of the city. Signs placed in the right-of-way shall be subject to removal.

(c) *Projections over public ways.* Signs projecting over public walkways shall be permitted to do so only subject to the projection and clearance limits either defined herein or, if not so defined, at a minimum height of ten (10) feet from grade level to the bottom of the sign. Signs, architectural projections or

sign structures projecting over vehicular access areas must conform to the minimum height clearance limitations imposed by the city for such structures.

(d) *Traffic visibility.* No sign or sign structure shall be erected within thirty (30) feet of the paved portion of the intersection of any street or in such a manner as to obstruct free and clear vision, nor at any location where by its position, shape or color it may interfere with or obstruct the view of or be confused with any authorized traffic sign, signal or device.

(e) *On-premises.* Signs that advertise goods or services not located on the same premises as the sign are not allowed, except as authorized elsewhere in this article.

(f) *Computation of frontage.* If a premises contains walls facing more than one (1) property line or encompasses property frontage bounded by more than one (1) street or other property usages, the sign area(s) for each building wall or property frontage will be computed separately for each building wall or property line facing a different frontage. The sign area(s) thus calculated shall be permitted to then be applied to permitted signs placed on each separate wall or property line frontage.

(g) *Maintenance, repair and removal.* Every sign permitted by this ordinance shall be kept in good condition and repair. When any sign becomes insecure, in danger of falling or is otherwise deemed unsafe by the code official, or if any sign shall be unlawfully installed, erected or maintained in violation of any of the provisions of this article, the owner thereof or the person or firm using same shall, upon written notice by the code official forthwith in the case of immediate danger, and in any other case within not more than ten (10) days, make such sign conform to the provisions of this article, or shall remove it. If within ten (10) days the order is not complied with, the code official shall be permitted to remove or cause such sign to be removed at the expense of the owner and/or the user of the sign.

(h) *Obsolete sign copy.* Any sign copy that no longer advertises or identifies a commercial use conducted on the property on which said sign is erected must have the sign copy covered or removed within thirty (30) days after written notification from the code official; and upon failure to comply with such notice, the code official is hereby authorized to cause removal of such sign copy, and any expense incident thereto shall be paid by the owner of the building, structure or ground on which the sign is located.

(i) *Abandoned sign.* Any sign structure that has no message or no sign face for a continuous period of one (1) year or more, or for which has advertisement that no longer applies shall be considered an abandoned sign. The sign shall be removed within thirty (30) days after written notification from the code official; and upon failure to comply with such notice, the code official is hereby authorized to cause removal of such sign, and any expense incident thereto shall be paid by the owner of the building, structure or ground on which the sign is located.

(j) *Placement.* If any sign is found to be in violation of any provision of this section and the identity of the individual placing the sign at that location cannot be determined, the owner of the business or property that is advertised on the sign shall be held prima facie responsible for such violation.

(k) *Nonconforming signs.* Any permanent sign legally existing at the time of the passage of this ordinance that does not conform in location, height or size with the regulations of the zone in which such sign is located, shall be considered a legal nonconforming use or structure and shall be permitted to continue in such status until such time as it is either abandoned or removed by its owner, subject to the following limitations:

(1) Structural alterations, enlargement or re-erection are permissible only where such alterations will not increase the degree of nonconformity of the signs.

(2) Any legal nonconforming sign shall be removed or rebuilt without increasing the existing height or area if it is damaged, or removed if allowed to deteriorate to the extent that the cost of repair

or restoration exceeds fifty (50) percent of the replacement cost of the sign as determined by the code official.

(Ord. No. 4178, art. 2, 12-6-10)

## Sec. 25-505. Permits required.

Unless specifically exempted, a permit must be obtained from the code official for the erection and maintenance of all signs erected or maintained within this city. Exemptions from the necessity of securing a permit, however, shall not be construed to relieve the owner of the sign involved from responsibility for its erection and maintenance in a safe manner and in a manner in accordance with all the other provisions of this article.

(a) *Construction documents.* Before any permit is granted for the erection of a sign or sign structure requiring such permit, construction documents shall be filed with the code official showing the dimensions, materials and required details of construction, including loads, stresses, anchorage and any other pertinent data. The permit application shall be accompanied by the written consent of the owner or lessee of the premises upon which the sign is to be erected and by engineering calculations signed and sealed by a registered design professional where required by the International Building Code.

(b) *Changes to signs.* No sign shall be structurally altered, enlarged or relocated except in conformity to the provisions herein, nor until a proper permit, if required, has been secured. The changing or maintenance of moveable parts or components of an approved sign that is designed for such changes, or the changing of copy, business names, lettering, sign faces, colors, display and/or graphic matter, or the content of any sign shall not be deemed a structural alteration.

(c) *Permit fees.* Permit fees to erect, alter or relocate a sign shall be in accordance with the fee schedule adopted within this city.

(Ord. No. 4178, art. 2, 12-6-10)

## Sec. 25-506. Specific sign requirements.

(a) *Wall signs.* Every multifamily residential complex, commercial or manufacturing building, and every separate nonresidential building in a residential zone may display wall signs per street frontage subject to the limiting standards set forth in Table 1. For shopping centers or other multiple occupancy nonresidential buildings, the building face or wall shall be calculated separately for each separate occupancy, but in no event will the allowed area for any separate occupancy be less than fifty (50) square feet.

TABLE 1
STANDARDS FOR WALL SIGNS

| Land Use/Zoning District | Maximum Area (square feet) |
|---|---|
| Multifamily residential | 5 (name plate only) |
| Nonresidential in a residential zone | 3 per lineal foot of building or tenant space fronting street |

| | |
|---|---|
| commercial and manufacturing | |

(b) *Freestanding signs.* In addition to any allowable wall signs, every single-family residential subdivision, multifamily residential complex, commercial or manufacturing building, and every separate nonresidential building in a residential zone shall be permitted to display freestanding signs per street frontage subject to the limiting standards set forth in Table 2.

(1) For subdivision, mobile home park or apartment identification signs placed on a decorative entry wall approved by the code official, two (2) identification signs shall be permitted to be placed at each entrance to the subdivision or apartment complex, one (1) on each side of the driveway or entry drive.

(2) Bed and breakfast inns or hostels are allowed one (1) freestanding yard sign not greater than twelve (12) square feet and displaying only the name of the facility.

TABLE 2
STANDARDS FOR FREESTANDING SIGNS

| Land Use/ Zoning District | Maximum Number of Signs | Maximum Height (feet) | Maximum Area (square feet) |
|---|---|---|---|
| RE, R-1, R-2, R-3, R-4, R-5 & RMH districts | 2 per arterial street entrance | 5 | 40 |
| NC, nonresidential uses in residential zones, AG, AG-1 | 1 monument type sign per street front, constructed with same building material as main building | 12 | 1 square foot per 1 LF frontage up to 120 square feet |
| C-1, C-2, CBD, PD, M-1, and M-2 (except in locations identified below) | 1 per street front | 35 | 1 square foot per 1 LF frontage up to 150 square feet |
| C-1, C-2, CBD, PD, M-1 and M-2 located on Kingshighway, Southern Expressway and MO Route 74 (Shawnee Parkway) | 1 per street front | 40 | 1.5 square feet per 1 LF frontage up to 150 square feet |

| | | | |
|---|---|---|---|
| C-1, C-2, PD, M-1 and M-2 located on Interstate 55 | 1 per street front | 60 | 2.5 square feet per 1 LF frontage up to 150 square feet |
| A-1 district (airport) | As approved by airport manager | | |

(c) *Canopy and marquee signs.*

(1) The permanently-affixed copy area of canopy or marquee signs shall not exceed an area equal to twenty-five (25) percent of the face area of the canopy, marquee or architectural projection upon which such sign is affixed or applied.

(2) Graphic striping, patterns or color bands on the face of a building, canopy, marquee or architectural projection shall not be included in the computation of sign copy area.

(d) *Awning signs.*

(1) The copy area of awning signs shall not exceed an area equal to twenty-five (25) percent of the background area of the awning or awning surface to which such a sign is affixed or applied, or the permitted area for wall or fascia signs, whichever is less.

(2) Neither the background color of an awning, nor any graphic treatment or embellishment thereto such as striping, patterns or valances, shall be included in the computation of sign copy area.

(e) *Projecting signs.*

(1) Projecting signs shall be permitted in lieu of freestanding signage on any street frontage. Projecting signs shall be limited to one (1) sign per occupancy along any street frontage with public entrance to such an occupancy, and shall be further limited in height and area to three (3) square feet per each one (1) lineal foot of building frontage, except that no such sign shall exceed an area of one hundred fifty (150) square feet.

(2) No such sign shall extend vertically above the highest point of the building facade upon which it is mounted by more than three (3) feet.

(3) Such signs shall not extend over a public sidewalk in excess of fifty (50) percent of the width of the sidewalk.

(4) Such signs shall maintain a clear vertical distance above any public sidewalk a minimum of ten (10) feet.

(f) *Roof signs.*

(1) Roof signs shall be permitted in commercial, planned development, and manufacturing districts only.

(2) Such signs shall not extend above the roofline.

(3) The sign area for roof signs shall be assessed against the maximum permitted area for wall signs on the elevation of the building most closely parallel to the face of the sign.

(g) *Electronic, video, or digital message signs.*

(1) The maximum size of the electronic, video, or digital message portion of signs in the CBD, C-1, C-2, PD, M-1 or M-2 zoning districts shall not exceed fifty (50) square feet.

(2) The maximum size of the electronic, video, or digital message portion of signs in the NC district or on the premises of any nonresidential use in any residential district shall not exceed thirty-two (32) square feet.

(3) Electronic, video, or digital message signs in an NC district or on the premises of any nonresidential use in any residential district shall be turned off no later than 10:00 p.m. and not turned on before 7:00 a.m.

(4) Flashing of messages or images is prohibited.

(5) Animation, defined as the illusion of motion, is allowed unless the city manager determines that the animation constitutes a distraction to traffic. Animation, or a sequence of animations shall not exceed eight (8) seconds in length, followed by a transition of a minimum of one and one-half (1.5) seconds or a blank (black) slide of one-half (0.5) second.

(6) Static messages or images shall remain constant for a minimum of one and one-half (1.5) seconds.

(7) Scrolling messages are allowed, but shall not exceed eight (8) seconds in length.

(8) A minimum of one and one-half (1.5) seconds of transition or a blank slide of a minimum of one-half (0.5) second must appear after each eight (8) seconds of any type of animation, messages or images. Transitions may not involve flashing.

(9) Movies or videos involving live actors or events are not allowed.

(10) Automatic dimming capability that adjusts the brightness of the sign to the ambient light at all times of the day and night is required. The maximum illuminance produced by the sign shall not exceed three-tenths (0.3) footcandle greater than the ambient light level.

(h) *A-frame signs.* A-frame signs are allowed in all commercial, planned development, and manufacturing districts, based on the following criteria:

(1) Such signs are limited to eight (8) square feet per sign face with not more than two (2) sign faces.

(2) The overall size of the sign shall not exceed thirty (30) inches in width and forty-eight (48) inches in height.

(3) Such signs may not be internally illuminated.

(4) Such signs may be placed only on the sidewalk in front of the place of business it advertises and must allow a three-foot wide space on the sidewalk for pedestrians to pass.

(5) Such signs shall be removed from the sidewalk and placed inside the business at the close of each business day and/or whenever the business ceases to be open.

(6) Such signs shall be secured in a fashion to prevent them from blowing over or falling over.

(i) *Signs for development complexes.*

(1) *Master sign plan required.* All landlord or single-owner controlled multiple-occupancy developments on parcels exceeding three (3) acres in size shall submit to the code official a master sign plan prior to issuance of new sign permits. The master sign plan, as approved by the code official, shall establish standards and criteria for all signs in the complex that require permits, and shall address, at a minimum, the following:

a. Proposed sign locations.

b. Materials.

c. Type of illumination.

d. Design of freestanding sign structures.

e. Size.

f. Quantity.

g. Uniform standards for non-business signage, including directional and informational signs.

h. Letter of approval from land owner or agent to be submitted with permit application.

i. All applications for sign permits for signage within a multiple-occupancy development complex shall comply with the master sign plan.

(2) *Amendments*. Any amendments to a master sign plan must be approved by the code official and signed by the owner(s) within the development complex before such amendment will become effective.

(j) *Directional signs.*

(1) *On-premises signs.* No more than two (2) on-premises directional signs shall be permitted at each public street entrance onto any property in a commercial, planned development, or manufacturing district. There shall be no limit to the number of directional signs providing directional information interior to a lot. The maximum area for any directional sign visible from adjacent property or rights-of-way shall be six (6) square feet. Not more than twenty-five (25) percent of the area of any directional sign shall be permitted to be devoted to business identification or logo.

(2) *Off-premises signs.* Signs directing the public to locations of businesses or facilities shall be allowed adjacent to arterial and collector streets as identified on the major street plan, at the intersection with the public streets leading to the business or facility. All off-premises directional signs shall be subject to the following limitations:

a. The sign area shall not exceed six (6) square feet in area.

b. The sign shall be placed not less than seven (7) feet above the surface of the ground and shall not exceed ten (10) feet in height above the ground surface.

c. The sign shall contain the name of the facility, distance, logo and directional arrow only.

d. A sign must be located completely on private property.

e. A business or facility must be located within the corporate limits, and shall be allowed no more than two (2) such signs.

f. No sign may be located within fifty (50) feet of another sign except when mounted on a common post.

g. Signs which are no longer applicable because of name changes, relocations, going out of business, or other reasons shall be removed immediately.

h. The square foot area of an off-premises directional sign shall not be counted toward the total allowable signage for the lot on which it is located.

(k) *Temporary signs.*

(1) *Real estate signs.* Real estate signs shall be permitted in all zoning districts, subject to the following limitations:

a. Real estate signs advertising the sale of a single residential lot may be placed on that lot without limitation on the number or size of such signs.

b. Real estate signs advertising the sale of lots located within a subdivision shall be limited to one (1) sign per entrance to the subdivision, and each sign shall be no greater than thirty-two (32) square feet in area nor six (6) feet in height. All signs permitted under this section shall be removed within ten (10) days after sale of the last original lot.

c. Real estate signs advertising the sale or lease of space within commercial or manufacturing buildings or vacant land shall be no greater than thirty-two (32) square feet in area nor six (6) feet in height, and shall be limited to one sign per street front.

d. Real estate signs shall be removed not later than thirty (30) days after execution of a lease agreement in the event of a lease, or the closing of the sale in the event of a purchase.

e. Real estate directional signs directing the public to a property which is for sale shall be allowed, but only on private property with the permission of the property owner.

f. In addition to the real estate sign permitted under subsection a. hereinabove, a banner or other type sign may also be posted on the property to advertise an open house for that residential lot. This open house sign may be placed not sooner than forty-eight (48) hours before the open house and must be removed not later than the end of the day on which the open house is held. In no event, however, shall such sign be posted for more than three (3) consecutive days.

(2) *Development and construction signs.* Signs temporarily erected during construction to inform the public of the developer, contractors, architects, engineers, the nature of the project or anticipated completion dates, shall be permitted in all zoning districts, subject to the following additional limitations:

a. Such signs on a single residential lot shall be limited to one (1) sign, not greater than three (3) feet in height and ten (10) square feet in area.

b. Such signs shall be limited to one (1) sign, at each entrance to the development or on one (1) of the lots to be built upon, and shall be no greater than six (6) feet in height and thirty-two (32) square feet in area.

c. Such signs for nonresidential uses in residential districts shall be limited to one (1) sign, and shall be no greater than three (3) feet in height and ten (10) square feet in area.

d. Such signs for commercial, planned development, or manufacturing projects shall be limited to one (1) sign per street front, not to exceed ten (10) feet in height and thirty-two (32) square feet in total area for projects on parcels five (5) acres or less in size, and not to exceed ten (10) feet in height and sixty-four (64) square feet in total area for projects on parcels larger than five (5) acres.

e. Development and construction signs may not be displayed until after the issuance of building permits by the building official, and must be removed at the expiration of the permit or not later than thirty (30) days following issuance of an occupancy permit, whichever is earlier.

(3) *Special promotions and events.* In addition to other signs allowed by this code, signs temporarily displayed to advertise special promotions and events shall be permitted subject to the following limitations:

a. For nonprofit organizations, the following signs shall be permitted:

(i) *On-premises.* One (1) on-premises sign, which may be a banner sign, shall be permitted per street front of the non-profit organization sponsoring the event. Such

signs shall not contain commercial advertising, be animated or flashing and shall not exceed three (3) feet in height and a total area of thirty (30) square feet. Such signs shall be erected not more than thirty (30) days prior to the event and shall be removed not more than one (1) day after the event.

(ii) *Off-premises.* Off-premises signs promoting a special event for a non-profit organization shall be permitted in all zoning districts. No more than one (1) such sign shall be displayed on any property, not exceeding three (3) feet in height and a total area of ten (10) square feet. Such signs shall not be animated, flashing or contain commercial advertising. Banner signs shall not be permitted. Such signs shall be erected not more than thirty (30) days prior to the event and shall be removed not more than one (1) day after the event.

b. For commercial events or promotions, signs shall be permitted only in commercial, planned development, and manufacturing zoning districts, with the following restrictions:

(i) Not more than one (1) such sign shall be displayed on any property, not exceeding five (5) feet in height and a total area of thirty-two (32) square feet.

(ii) Electronic, video, or digital message signs shall be allowed if they meet the standards set out in section 25-506(g)(5)—(10), specific sign requirements.

(iii) One (1) banner sign is permitted if it is securely attached to an exterior wall or support structure of the business the sign pertains to, is in good repair and well maintained; and does not block public access.

(iv) Such signs may be displayed for not more than thirty (30) consecutive days in any three-month period, and not more than sixty (60) days in any calendar year. The signs shall be erected not more than five (5) days prior to the event, and shall be removed not more than one (1) day after the event. No animated or flashing signs shall be permitted.

(v) If signs are located on vehicles or trailers, such signs shall be displayed for not more than seven (7) consecutive days at any one (1) time and not more than thirty (30) days in a calendar year.

(4) *Garage sale signs.*

a. On-premises signs advertising a garage sale conducted on the premises shall be allowed, but only beginning the day before the sale and being removed by the end of the day of the sale.

b. Off-premises directional signs shall be allowed to direct the public to a garage sale, but only on private property with the permission of the property owner. All such signs shall include the address and date of the garage sale being advertised, and are subject to the same time restrictions as on-premises garage sale signs.

(5) *Portable signs.* Portable signs shall be permitted only in the commercial, planned development, and manufacturing districts, as designated in this code, subject to the following limitations:

a. No more than one (1) such sign may be displayed on any property, and shall not exceed a height of five (5) feet and a total area of thirty-two (32) square feet.

b. Such signs shall be displayed not more than thirty (30) days in any calendar year.

c. Any electrical portable signs shall comply with the ICC Electrical Code, as adopted in this city.

d. No portable sign shall be displayed prior to obtaining a sign permit.

e. No animated or flashing signs will be permitted.

(l) *Exempt signs.* The following signs shall be exempt from the provisions of this chapter.

(1) Official notices authorized by a court, public governmental body or public safety official.

(2) Directional, warning or information signs authorized by federal, state or municipal governments.

(3) Memorial plaques, building identification signs and building cornerstones when cut or carved into a masonry surface or when made of noncombustible material and made an integral part of the building or structure.

(4) The flag of a government or noncommercial institution, such as a school.

(5) Street address signs and combination nameplate and street address signs that contain no advertising copy and which do not exceed six (6) square feet in area.

(m) *Prohibited signs.* Signs that are not specifically authorized are expressly prohibited. The following devices and locations shall be specifically prohibited:

(1) Signs located in such a manner as to obstruct or otherwise interfere with an official traffic sign, signal or device, or obstruct or interfere with a driver's view of approaching, merging or intersecting traffic.

(2) Except as approved by the code official for special events, signs encroaching upon or overhanging public right-of-way. No sign shall be attached to any utility pole, light standard, public tree or any other public facility located within the public right-of-way.

(3) Signs which blink, flash or are animated by lighting in any fashion that would cause such signs to have the appearance of traffic safety signs and lights, or emergency vehicle warnings from a distance.

(4) Except as authorized in section 25-506(k)(3)b., any sign attached to, or placed on, a vehicle or trailer parked on public or private property unless the following conditions are met:

a. The primary purpose of such a vehicle or trailer is not the display of signs;

b. The signs are magnetic, decals or painted upon the vehicle or equipment and do not break the silhouette of the vehicle; and

c. The vehicle or trailer is in operating condition, currently registered and licensed to operate on public streets when applicable, and actively used or available for use in the daily functions of the business to which such signs relate.

(5) Vehicles and trailers used primarily as static displays, advertising a product or service, nor utilized as storage, shelter or distribution points for commercial products or services for the general public.

(6) Banner signs, except as otherwise specifically authorized in this Code.

(Ord. No. 4178, art. 2, 12-6-10)

**Secs. 25-507—25-600. Reserved.**

## ARTICLE VI. FENCES

Sec. 25-601. Applicability.

Sec. 25-602. Permitting process.

Sec. 25-603. General standards.

Sec. 25-604. Location, type and height.

Sec. 25-605. Prohibited fences.

Secs. 26-606—25-700. Reserved.

### Sec. 25-601. Applicability.

The requirements of this section shall apply to the construction, installation, extension and replacement of all fences more than thirty-six (36) inches in height.

(Ord. No. 4178, art. 3, 12-6-10; Ord. No. 4290, art. 1, 1-9-12)

### Sec. 25-602. Permitting process.

A fence permit shall be obtained prior to beginning construction, extension or replacement of all applicable fences. If more than thirty (30) percent of an existing fence is being replaced, a permit must be obtained. To obtain a permit for a fence, a completed application form and site plan must be submitted to the city manager. The following regulations apply to the installation of any fence requiring a permit.

(Ord. No. 4178, art. 3, 12-6-10; Ord. No. 4290, art. 1, 1-9-12)

### Sec. 25-603. General standards.

(a) No fence shall be constructed on, or across, a property line, except where a fence is constructed on adjacent properties collectively owned by the fence owner. No fence shall be constructed on property not owned by the fence owner without the written permission of the property owner. The fence owner is responsible for locating property lines.

(b) Fences cannot be constructed within thirty (30) feet of the intersection of two (2) streets, as measured from the right-of-way/property line.

(c) Fences shall not be constructed within any utility easement, except as authorized by the city manager after the property owner signs a waiver accepting the responsibility for building a fence within a utility easement.

(d) All fences must be constructed in a workmanlike manner and maintained in their original upright condition.

(e) Missing boards, pickets or posts shall be replaced in a timely manner with material of the same type and quality.

(f) Fences shall have adequate footings, foundations, or post depth and size.

(g) For fences having a front and a back, such as a privacy fence, the front or finished side shall face outward from the property on which the fence is installed.

ARTICLE VI. FENCES

(Ord. No. 4178, art. 3, 12-6-10; Ord. No. 4290, art. 1, 1-9-12)

### Sec. 25-604. Location, type and height.

| | | |
|---|---|---|
| Agricultural Uses: | | |
| • Front, rear and side yards | Maximum of 4 feet | May include barbed wire, except where adjacent to a residential use or district |
| Residential Uses: | | |
| • Rear and side yards | Maximum of 6 feet | |
| • Front yards | Maximum of 3 feet | 50% of the surface must be open |
| Commercial Uses: | | |
| • Rear and side yards | Maximum of 8 feet | May include barbed wire on top, except where adjacent to a residential use or district |
| • Front yards | Maximum of 3 feet | |
| Manufacturing Uses: | | |
| • Front, rear and side yards | Maximum of 8 feet | May include barbed wire on top, except where adjacent to a residential use or district |
| Swimming Pools—All yards | Minimum of 4 feet | In accordance with section 13-37 of the City Code |
| Tennis Courts/Athletic Fields—All yards | Maximum of 12 feet | Must be open wire mesh fences |
| Playgrounds/Schools—All yards | Maximum of 8 feet | |

(Ord. No. 4178, art. 3, 12-6-10; Ord. No. 4290, art. 1, 1-9-12)

### Sec. 25-605. Prohibited fences.

(a) No fence shall be constructed solely of a single wire or of two (2) wires between posts or supports.

(b) No fence shall be constructed in whole or in part of barbed wire, except as allowed in section 25-604

(c) No fence shall be constructed in whole or in part of cloth, canvas or other like material.

(d) No fence shall be used for advertising purposes.

(e) No fence shall have connected to it any type of electrical current, except in the AG or AG-1 districts.

(Ord. No. 4178, art. 3, 12-6-10; Ord. No. 4290, art. 1, 1-9-12)

### Secs. 26-606—25-700. Reserved.

## ARTICLE VII. RETAINING WALLS

Sec. 25-701. Applicability.

Sec. 25-702. Exemptions.

Sec. 25-703. Permitting process.

Sec. 25-704. Engineer certification required.

Sec. 25-705. Location of retaining walls.

Sec. 25-706. Terraced retaining walls.

Secs. 25-707—25-800. Reserved.

### Sec. 25-701. Applicability.

The requirements of this section shall apply to the construction, installation, extension and replacement of all retaining walls of more than four (4) feet in height, as measured from the final grade at the lower-side of the wall to the top of the wall.

(Ord. No. 4178, art. 4, 12-6-10)

### Sec. 25-702. Exemptions.

Retaining walls that meet the following requirements shall be exempt from the requirements of this section:

(a) Retaining walls less than four (4) feet in height.

(b) Retaining walls designed as part of a structure.

(c) Retaining walls shown on approved improvement plans.

(d) Retaining walls designed as part of a public capital improvement project.

(Ord. No. 4178, art. 4, 12-6-10)

### Sec. 25-703. Permitting process.

A retaining wall permit shall be obtained prior to beginning any construction, extension or replacement of all applicable retaining walls. To obtain a retaining wall permit, a completed application form and site plan must be submitted to the city manager. The site plan shall include the following information:

(a) Location of all property lines.

(b) Location of all existing and proposed structures.

(c) Location of existing retaining walls on or adjacent to the property that are to remain in place, if applicable.

(d) Portions of existing retaining walls that will be replaced, if applicable.

(e) Location of new retaining wall.

(f) Location of utilities and utility easements; drainage easements and drainageways.

(g) Construction details to include, but not limited to, dimensions, cross-sections and footing design.

(h) Elevations above and below the retaining wall.

(i) The height of the proposed retaining wall and the material to be used.

(j) Engineer's certification, if required.

(k) Any additional information that may be requested by city staff after initial review.

Once all of the required information is submitted, it shall be reviewed for compliance. If the application is approved, the applicant shall pay the permit fee and the retaining wall permit will be issued. All retaining walls shall be installed in compliance with the retaining wall regulations and with the information shown on the approved site plan and retaining wall permit application form. The applicant shall contact the division of inspection services to request a final inspection upon completion of the retaining wall. If the inspector determines that the retaining wall was constructed in accordance with the requirements contained in this section and the approved retaining wall permit, a certificate of compliance will be issued forthwith. If the retaining wall does not pass the inspection, the inspector shall prepare an inspection report detailing the deficiencies within five (5) business days.

(Ord. No. 4178, art. 4, 12-6-10)

## Sec. 25-704. Engineer certification required.

An engineer's design, certification and construction observation shall be required in the instances listed below. All engineering services shall be performed under the supervision of a professional engineer registered in the State of Missouri.

(a) Any retaining wall over four (4) feet in height where one and one-half (1.5) times the height of the wall is either (1) greater than or equal to the building setback of an adjacent lot, or (2) such calculated distance would encroach upon any structure.

(b) Any retaining wall over four (4) feet in height located adjacent to a public right-of-way.

(Ord. No. 4178, art. 4, 12-6-10)

## Sec. 25-705. Location of retaining walls.

The location of all retaining walls shall conform to the following standards.

(a) *Private property.* All retaining walls shall be located on private property and shall be built with the consent of the property owners. The retaining wall installer and/or property owner shall be responsible to correctly locate property boundaries.

(b) *Sight triangle.* Retaining walls over thirty (30) inches tall constructed near street intersections shall not be located within twenty-five (25) feet of the intersection, as measured from the property/right-of-way line, in order to provide a reasonable degree of traffic visibility.

(c) *Easements.* Retaining walls shall not restrict access to utilities. Retaining walls shall not impede the normal flow of stormwater and shall not cross an open drainage channel. Approval of retaining walls proposed in a utility or drainage easement shall be subject to the discretion of the city manager. Retaining walls shall not be constructed over a public or private access easement.

(Ord. No. 4178, art. 4, 12-6-10)

### Sec. 25-706. Terraced retaining walls.

If walls are terraced, the upper wall shall be located no closer to the lower wall than one (1.0) time the height of the tallest wall.

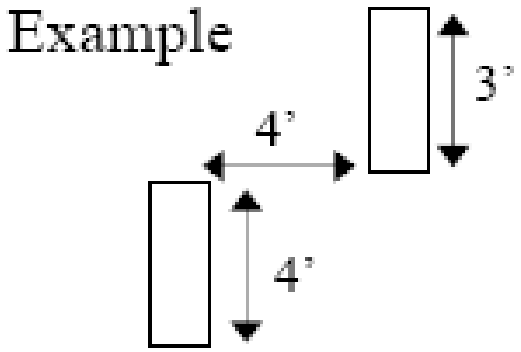


(Ord. No. 4178, art. 4, 12-6-10)

### Secs. 25-707—25-800. Reserved.

## ARTICLE VIII. LANDSCAPING AND BUFFERYARDS

Sec. 25-801. Purpose.

Sec. 25-802. Applicability.

Sec. 25-803. General landscaping requirements.

Sec. 25-804. Parking lot landscaping requirements.

Sec. 25-805. Bufferyards.

Sec. 25-806. Planting materials.

Secs. 25-807—25-900. Reserved.

### Sec. 25-801. Purpose.

The intent of this section is to:

(a) Establish healthy environmental conditions by providing shade, air purification, oxygen regeneration, groundwater recharge, stormwater runoff retention and treatment, erosion control, and noise, glare and heat abatement.

(b) Provide visual buffering from a street, to buffer potentially incompatible land uses, and to generally enhance the quality of appearance of a development site, and the city as a whole.

(c) Encourage the preservation of existing trees and vegetation.

(Ord. No. 4178, art. 5, 12-6-10)

### Sec. 25-802. Applicability.

The landscaping and bufferyard requirements of this section shall apply to those districts containing such requirements, as specified in chapter 30, zoning regulations.

(Ord. No. 4178, art. 5, 12-6-10)

### Sec. 25-803. General landscaping requirements.

(a) Unless otherwise specified in chapter 30, zoning regulations, a minimum of fifteen (15) percent of the total land area of any tract, parcel or lot shall be landscaped. Landscaping shall be reasonably distributed throughout the site. No utility easement may be used for the required landscaping areas, unless approved in writing by the appropriate official of each affected utility.

(b) No new buildings or additions to existing buildings shall be permitted unless additional landscaping is provided on the tract, parcel or lot in an area equal to at least fifteen (15) percent of the land area occupied by the new building or addition, unless otherwise specified in chapter 30, zoning regulations.

(Ord. No. 4178, art. 5, 12-6-10)

## Sec. 25-804. Parking lot landscaping requirements.

(a) All parking lots located within twenty (20) feet of a street right-of-way shall have a ten-foot wide street landscaping strip on private property separating parking areas from abutting street rights-of-way containing no less than four (4) of the categories of planting materials listed below. The street landscaping strip shall contain at least one (1) tree per fifty (50) linear feet of street frontage. Such trees may be clustered or arranged within the area and need not be placed at even intervals. The street landscaping strip may contain driveways. In the central business district (CBD), this street landscaping strip shall be designed and constructed to create an edge along street rights-of-way that minimize the disruption of the urban environment created by the wide expanse of parking lots and vehicular use areas and shall be consistent with any adopted streetscape plans adopted for the area.

(b) A minimum of fifteen (15) percent of all parking lots must consist of landscaped area. The landscaped areas shall be reasonably distributed throughout the parking lot. Any interior landscaped areas shall be recessed areas which help control and treat stormwater runoff, unless otherwise allowed by the city manager.

(c) If the parking requirements for a land use exceed one hundred fifty (150) parking spaces, parking areas of no more than one hundred fifty (150) spaces shall be separated by a landscaped area which is at least ten (10) feet in width. The ten-foot wide landscaped area shall contain at least four (4) of the categories of planting materials listed below. In addition, trees shall be planted within the ten-foot wide landscaped area at the rate of a minimum of one (1) tree for each fifty (50) linear feet. Appropriately placed connections between parking areas are permitted. The following uses are exempt from the requirements of this section: motor vehicle or trailer sales and service; and farm machinery sales and service.

(d) Landscaping shall not be allowed to obstruct the view of motorists using any street, private driveway, parking aisles or the approach to any street intersection so as to constitute a traffic hazard or condition dangerous to the public safety. Landscaping in these areas shall be a maximum of eighteen (18) inches tall.

(e) Landscaping shall be maintained in good condition and replaced within one (1) season where necessary to ensure the continuation of appropriate landscaped material.

(f) The landscape plantings shall be considered as an element of a project in the same manner as paved parking, building construction and materials, stormwater drainage, and other elements and shall be included in the required site plan. All plant materials shall be installed prior to issuance of certificates of occupancy. A temporary certificate of occupancy (TCO) may be issued prior to installation of plant materials provided that a written assurance and a financial guarantee is furnished to the city manager to insure the installation of required materials within six (6) months of the issuance of the TCO. The financial guarantee shall be equal to two (2) times the cost of the materials, as estimated by the owner's landscape architect, architect, land planner or nurseryman, and the guarantee may be in the form of a letter of credit, bond or cash.

(g) Property owners are encouraged to incorporate stormwater management features into required landscaping areas. If landscaped areas are used to fulfill required stormwater management requirements, owners shall annually certify to the city that the stormwater management practices are being maintained and performing properly. Stormwater management requirements are specified in chapter 23 of this Code.

(Ord. No. 4178, art. 5, 12-6-10)

## Sec. 25-805. Bufferyards.

Bufferyards shall be a minimum of twenty (20) feet wide and may be included within required yard setback areas. No utility easement may be included in the bufferyard area, unless approved in writing by the appropriate official of each affected utility. Plantings shall achieve an eighty (80) percent opacity within four (4) years. Three (3) types of bufferyards are required, depending on the use of the property being developed and the use or zoning district of the adjacent property: Type A, B, and C. Type A is required for multifamily residential uses or mobile home parks, either of which are located adjacent to single-family residential districts or uses. Type B is required for commercial uses, which are adjacent to any residential use or district. Type C is required for manufacturing/industrial uses, either of which are located adjacent to any commercial or residential use or district. Barriers are also required for the Type C bufferyard.

*Type A Bufferyard.* Plantings required per one hundred (100) linear feet:

Two (2) small deciduous or ornamental trees.

One (1) medium and large deciduous shade tree.

Two (2) conifer or upright evergreen trees.

Ten (10) shrubs.

Grasses, groundcover plants, flowers or forbs as desired.

Natural buffer area, where existing vegetation is equal to or greater than required plantings as approved by the city manager.

*Type B Bufferyard.* Plantings required per one hundred (100) linear feet:

Three (3) small deciduous or ornamental trees.

Two (2) medium or large deciduous shade trees.

Two (2) conifers or upright evergreen trees.

Sixteen (16) shrubs.

Grasses, groundcover plants, flowers or forbs as desired.

Natural buffer area, where existing vegetation is equal to or greater than required plantings as approved by the city manager.

*Type C Bufferyard.* Plantings required per one hundred (100) linear feet:

Three (3) small deciduous or ornamental trees.

Three (3) medium or large deciduous trees.

Four (4) conifers or upright evergreen trees.

Twenty (20) shrubs.

Grasses, groundcover plants, flowers or forbs as desired.

Natural buffer area, where existing vegetation is equal to or greater than required plantings as approved by the city manager.

Solid barrier: Six-foot tall solid wood fence; or six-foot tall solid masonry/brick wall; or six-foot tall solid evergreen hedge.

(Ord. No. 4178, art. 5, 12-6-10)

## Sec. 25-806. Planting materials.

The categories of planting materials, and the minimum planting sizes for planting materials, where applicable, shall be as follows:

(a) *Medium and large deciduous shade trees:* Two-inch caliper, as measured six (6) inches above the ground, as specified by the American Association of Nurserymen or Shaw Nature Reserve.

(b) *Small deciduous or ornamental trees:* Four (4) feet in height as specified by the American Association of Nurserymen or the GrowNative Native Planting Information, with the exception of true dwarf species.

(c) *Conifers:* Six (6) feet in height.

(d) *Missouri native grasses/sedges:* As specified by the GrowNative Native Planting Information.

(e) *Upright evergreen trees:* Four (4) feet in height as specified by the American Association of Nurserymen or the GrowNative Native Planting Information, with the exception of true dwarf species.

(f) *Deciduous shrubs:* Minimum two-gallon size.

(g) *Evergreen shrubs:* Minimum two-gallon size.

(h) *Ground cover plants (crowns, plugs, containers):* In a number as appropriate by species to provide at least fifty (50) percent surface coverage after two (2) growing seasons.

(i) *Grass seeding or sod:* As appropriate to provide complete coverage within the first growing season.

(j) *Perennial flowers or native Missouri forbs:* As specified by the GrowNative Native Planting Information.

(Ord. No. 4178, art. 5, 12-6-10)

## Secs. 25-807—25-900. Reserved.

## ARTICLE IX. STREETS

Sec. 25-901. Definitions.

Sec. 25-902. Streets to be public.

Sec. 25-903. Street name.

Sec. 25-904. Street numbering system.

Sec. 25-905. Survey monuments.

Sec. 25-906. Street standards.

Sec. 25-907. Street improvements.

Sec. 25-908. Stormwater management.

Sec. 25-909. Street lighting.

Sec. 25-910. Bicycle routes.

Sec. 25-911. Sidewalks and trails.

Sec. 25-912. Driveways.

Secs. 25-913—25-1000. Reserved.

### Sec. 25-901. Definitions.

As used in this article, the following definitions apply:

*Alley.* A secondary means of ingress and egress serving more than one (1) tract of land and used primarily for vehicular access.

*Development.* Any manmade change in improved and unimproved real estate, including, but not limited to, buildings or other structures, mining, dredging, filling, grading, paving, diking, berming, excavation, drilling operations, or storage of equipment or materials.

*Sight distance.* The distance visible to the driver of a passenger vehicle measured along the normal travel path of a street to a specified height above the street when the view is unobstructed to oncoming traffic.

*Street.* All property dedicated for public or private street, highway, freeway or roadway purposes or subject to public or private easement therefore.

*Street, arterial.* A street or road of considerable continuity which serves or is intended to serve as a principal traffic way between separate areas or districts and which is the main means of access to the collector street system, highways, and expressways.

*Street, collector.* Streets, which in addition to servicing abutting properties, intercept local streets, connect with community facilities and carry neighborhood traffic to the arterial street systems.

*Street, cul-de-sac*. A short independent street terminating in a circular turnaround.

*Street, local.* A street designated to provide access to abutting property from collector and arterial streets.

*Street, loop*. A short independent street which terminates along the same street as its origin.

*Throat length.* The distance parallel to the centerline of a driveway to the first on-site location at which a driver can make a right turn or a left turn. On streets with curbs and gutters, the throat length shall be measured from the back of the curb. On streets without a curb and gutter, the throat length shall be measured from the edge of the shoulder.

(Ord. No. 4225, art. 1, 5-16-11)

### Sec. 25-902. Streets to be public.

All new streets constructed in the city shall be public streets, constructed to the street standards contained in this article. If requested by the developer and approved by the city manager, new local streets may be privately owned and maintained, but must still be constructed to the street standards contained in this article. Private streets shall be inspected by City of Cape Girardeau personnel and inspection fees will be charged to the developer for these inspections. Private streets shall be dedicated to public use. New private streets, if approved by the city manager, may have gates to limit access only if the following minimum standards are met:

(a) A system for entry by emergency and maintenance personnel is approved by the city manager.

(b) Gates shall be a minimum of fourteen (14) feet wide;

(c) Gates shall not be placed or located so as to obstruct or interfere with the entry of public works vehicles or emergency vehicles including police, ambulance, and fire apparatus.

(Ord. No. 4225, art. 1, 5-16-11)

### Sec. 25-903. Street name.

Proposed streets which are continuations of, or in general alignment with, existing named streets, shall bear the names of such existing streets. The name of a proposed street which is not in alignment with an existing street shall not duplicate the name of any existing or platted street within the city or within three (3) miles of the city limits. All the names of streets proposed by the subdivider shall be approved by the city manager prior to submitting the proposed record plat for review.

(Ord. No. 4225, art. 1, 5-16-11)

### Sec. 25-904. Street numbering system.

(a) *Number required.* Every building in the city shall be assigned a street address on the street on which the building fronts. For the purpose of a proper distribution of numbers, there shall be allotted one (1) number to each space of twenty (20) feet frontage, or fractional part thereof. For subdivisions originally platted within the county, the county style of addressing shall be continued including the allotment of one (1) number to each space of ten and one-half (10.5) feet frontage. It shall be the duty of the owners and occupants of each residential building in the city to have placed thereon, in a place visible from the street, numbers at least four (4) inches high or reflective white numbers at least three (3) inches high on a reflective green or blue background, showing the correct number of the building. It shall be the duty of the owners and occupants of each commercial or industrial building in the city to have placed thereon two (2) sets of numbers at least six (6) inches high, showing the correct number of the building. One (1) set shall be visible from the street and the other set visible from the rear of the building where there is access to the rear of the building from a street, alley or parking area or where there is a rear entrance to or exit from the building or where exceptional circumstances exist as determined by the city manager. All building numbers shall be in

Arabic numerals of a color contrasting with that of the building and script numbers shall not be permitted except as an auxiliary to the building numbers themselves.

(b) *Buildings on streets running north and south.* In numbering the buildings on streets running north and south, the numbering shall begin at Independence Street, as a dividing street, from Water Street to Farrar Drive, as a dividing street, south to William Street (Route K), as a dividing street, from Interstate 55 westward. The even numbers shall be on the east side, and the odd numbers shall be on the west side. The numbering shall be continued in each block on streets lying north and south of the dividing streets, respectively; the number of the second block shall begin with number "201", the third block with the number "301", and continue in the same manner, until all the buildings are numbered, reserving consecutive numbers for vacant spaces of twenty (20) feet. For subdivisions originally platted within the county, the county style of numbering shall be continued, including reserving consecutive numbers for vacant spaces of ten and one-half (10.5) feet as noted above.

(c) *Buildings on streets running east and west.* In numbering the buildings in blocks situated on streets running east and west, the numbering shall begin at the eastern edge of the city limits, and the same rules shall govern the numbering as provided above, except that the even numbers shall be on the north side of the street and the odd numbers shall be on the south side of the street.

(Ord. No. 4225, art. 1, 5-16-11)

## Sec. 25-905. Survey monuments.

Survey monuments shall be placed, by a land surveyor, at all street corners, as further described in the city's standards and specifications, and so located to find angle points, points of tangency of curves on one (1) side of the street, and at all boundary corners. Should conditions prohibit the placing of any monuments at the above locations, offsetting of the permanent marker is permitted; provided, however, that exact off-street courses and distances are shown on the record plat. Monuments shall meet the state standards for survey monuments. All proposed developments shall be "tied" to a Missouri State Plane monument. All coordinates shall be shown on a record plat or accompanying documents. No coordinates are to be assumed.

(Ord. No. 4225, art. 1, 5-16-11)

## Sec. 25-906. Street standards.

The arrangement, character, extent, width, grade and location of all streets shall be considered in their relation to existing and proposed streets, to topographical conditions, to public convenience and safety, and in their appropriate relation to the proposed uses of the land to be served by such streets. The following standards shall apply:

(a) Arrangements of streets shall reasonably conform as nearly as possible to the major street plan, and the developer shall make provision for the extension of arterial, collector and local streets. Except for loop or cul-de-sac streets, streets shall connect with streets already established, or provide for future connections to adjoining unsubdivided tracts, or shall be a reasonable projection of streets in adjacent tracts.

(b) Reserved strips of land which control or limit access at the terminus of streets are prohibited.

(c) A tangent of at least one hundred (100) feet long shall be introduced between reverse curves on arterial and collector streets.

(d) Streets shall intersect other streets with an angle of ninety (90) degrees extending a minimum distance of one hundred (100) feet, unless the city manager approves a minor deviation.

(e) A minimum radius of twenty-two (22) feet at street right-of-way intersection and a minimum radius of thirty-two (32) feet at the back of the curb shall be required. Greater radii may be required at the intersection and at the back of the curb of a street with an arterial street. The city manager may permit comparable cutoffs or chords in lieu of rounded corners at street right-of-way intersections.

(f) All streets intersecting on arterial or collector streets shall be directly opposite existing or other proposed streets or shall be a minimum of three hundred (300) feet distant, as measured between street centerlines. Local street intersection jogs or discontinuities with centerline offsets of less than two hundred (200) feet shall be avoided.

(g) Streets shall be constructed to the city's standards and specifications contained in the city engineer's office.

(h) Any subdivision platted along an existing street shall provide additional right-of-way, as shall be required in Table A.

(i) All streets in excess of two hundred fifty (250) feet in length shall be provided with a turnaround, cul-de-sac, or hammerhead, as specified in the city's standards and specifications. Temporary turnarounds, cul-de-sacs and hammerheads shall be allowed for a maximum of five (5) years after which time permanent pavement must be constructed.

(j) All streets shall be designed to meet the minimum requirements set forth in Table A, street standards, which is designed to provide the maximum allowable flexibility in street construction standards, while at the same time insuring the protection of the public interest. The widths of rights-of-way and pavements are allowed to vary as functions of the type of street and the corresponding intensity of use warrant. Street classifications may be indicated on the major street plan; otherwise, it shall be determined by the city manager.

(k) Radius of curve, superelevation, rates of vertical curvature (k-values), and all other design parameters of streets not specifically listed shall be designed in accordance to the most current version of the AASHTO Geometric Design of Highways and Streets.

(l) The use of traffic calming methods within developments is encouraged, including the utilization of curves, islands, intersections, and/or other methods that allow adequate access but promote traffic calming. The use of speed bumps is not allowed.

(m) A sight distance triangle shall be provided at every intersection in accordance with the most current version of the AASHTO Geometric Design of Highways and Streets. This sight distance triangle shall be measured from the outside edge of the travel lane. This unobstructed triangular area will permit the vehicles on either street to stop, if necessary, before reaching the intersection. Landscaping should be limited to a maximum height of eighteen (18) inches within this sight distance triangle. There shall be no parking or driveways in the sight distance triangle.

## Table A - Street Standards

| | Single-Family Residential Lots larger than 1 acre | Single-Family and Two-Family Residential Lots 1 acre or less | Multifamily Residential and Townhouses | Commercial |
|---|---|---|---|---|
| *For All Street Classifications* | | | | |

| | | | | |
|---|---|---|---|---|
| Maximum block length+ | 1,000 feet | 800 feet | 600 feet | 500 feet |
| Maximum cul-de-sac length | 800 feet | 600 feet | 500 feet | 500 feet |
| Maximum loop street length | 3,000 feet | 2,400 feet | 1,800 feet | 1,500 feet |
| Vertical curves | All changes in grade shall be connected by vertical curves to provide a smooth transition and the required sight distance. | | | |
| *Alleys* | | | | |
| Pavement width | 14 feet total | 14 feet total | 14 feet total | Not Allowed |
| Parking | none | none | none | Not Allowed |
| Right-of-way width | 20 feet | 20 feet | 20 feet | Not Allowed |
| *Local Streets* | | | | |
| Street width* | 20 feet total<br>2 10-foot driving lanes | 24 feet total<br>2 12-foot driving lanes | 36 feet total<br>2 11-foot driving lanes<br>2 7-foot parking lanes | 36 feet total<br>3 12-foot driving lanes |
| Curbs and gutters | No curbs<br>2 2-foot shoulders | Yes | Yes | Yes |
| Sidewalks | None | 5 feet wide each side | 6 feet wide each side | 5-feet wide each side |
| Parking | One side only | One side only | Both sides | None |
| Right-of-way | 50 feet | 50 feet | 60 feet | 60 feet |

| | | | | |
|---|---|---|---|---|
| width | | | | |
| Utility easements | 10 feet each side of r-o-w | 10 feet each side of r-o-w | 10 feet each side of r-o-w | 10 feet each side of r-o-w |
| Minimum grade | 1% | 1% | 1% | 1% |
| Maximum grade | 12% | 11% | 10% | 8% |
| *Collector Streets* | | | | |
| Street width* | 24 feet total<br>2 12-foot lanes | 27 feet total<br>2 10-foot driving lanes<br>1 7-foot parking lane | 36 feet total<br>2 11-foot driving lanes<br>2 7-foot parking lanes | 40 feet total<br>2 12-foot driving lanes<br>2 8-foot parking lanes |
| Curbs and gutters | Yes | Yes | Yes | Yes |
| Sidewalks | 5 feet wide each side | 5 feet wide each side | 6 feet wide each side | 6 feet wide each side |
| Parking | No | One side only | Both sides | Both sides |
| Right-of-way width | 60 feet | 60 feet | 80 feet | 80 feet |
| Utility easements | 10 feet each side of r-o-w | 10 feet each side of r-o-w | 10 feet each side of r-o-w | 10 feet each side of r-o-w |
| Minimum grade | 1% | 1% | 1% | 1% |
| Maximum grade | 10% | 10% | 10% | 7% |
| *Arterial Streets* | | | | |

| | | | | |
|---|---|---|---|---|
| Street width* | None | None | 36 feet total<br>3 12-foot driving lanes | 36 feet total<br>3 12-foot driving lanes |
| Curbs and gutters | None | None | Yes | Yes |
| Sidewalks | None | None | 6 feet wide each side | 6 feet wide each side |
| Bike lanes | None | None | 4 feet each side** | 4 feet each side** |
| Parking | None | None | None | None |
| Right-of-way width | None | None | 100 feet | 100 feet |
| Utility easements | None | None | 10 feet each side of r-o-w | 10 feet each side of r-o-w |
| Minimum grade | None | None | 1% | 1% |
| Maximum grade | None | None | 8% | 6% |

+ Blocks shall have sufficient depth to provide for two (2) tiers of lots of appropriate depth.

* Street width does not include curbs and gutters

** Adjust street width accordingly.

(Ord. No. 4225, art. 1, 5-16-11)

### Sec. 25-907. Street improvements.

At such time as the development or redevelopment of a property is proposed that is adjacent to a street that is accepted and maintained by the city, that portion of such street adjacent to the proposed development shall be improved to handle the increased traffic due to such development or redevelopment. Necessary improvements may include, but are not limited to, turn lanes, additional

through travel lanes and traffic signals. Any additional right-of-way needed for these improvements shall be dedicated by the developer at no cost to the city. The cost of the necessary improvements shall be paid by the developer. The improvements shall be made to current city specifications and standards and shall comply with the major street plan of the city.

(Ord. No. 4225, art. 1, 5-16-11)

### Sec. 25-908. Stormwater management.

The use of porous and permeable pavement, rain gardens, permeable pavers, and native vegetation are encouraged in order to minimize the amount of impervious surfaces within the city. Storm drainage improvements shall consist of storm sewers which shall adequately drain the areas being developed. Open channels may be permitted with approval by the city manager. The design of drainage improvements shall be coordinated to the extent possible with present and probable future improvements so as to form part of an integrated system. Adequate provisions shall be made for the disposal of stormwater, in accordance with the specifications, ordinances and standards of the city, and subject to the inspection and approval of the city manager.

(Ord. No. 4225, art. 1, 5-16-11)

### Sec. 25-909. Street lighting.

The primary purpose of streetlights is to improve traffic and pedestrian safety along streets. Preference shall be given for installation of streetlights on existing poles in order to reduce roadside hazards. The proper location, design and installation of streetlights on streets in new developments shall be the responsibility of the developer, in accordance with the city's standards and specifications. Streetlights shall be installed at the time new streets are constructed. Streetlights installed without prior approval by the city or not in accordance with this Code and the city's standards and specifications shall not be accepted as improvements and shall not be the responsibility of the city to operate or maintain. Requests for nonstandard streetlights shall be directed to public works and must be approved by the city manager. Nonstandard streetlights, not approved by city manager will not be the responsibility of the city, but shall be the responsibility of the developer or property owners association for construction, maintenance, operation and repair.

(Ord. No. 4225, art. 1, 5-16-11)

### Sec. 25-910. Bicycle routes.

Preferred routes for bicyclists are designated on the city's major street plan. Consideration for bicyclists could include a wider travel lane, marked bike paths, or multimodal paths. Bicycle lanes are required along arterials with consideration given to other streets. The minimum width for bicycle lanes on a street with no on-street parking is four (4) feet. The minimum width for bicycle lanes on a street with on-street parking is five (5) feet, which should be located between the travel lane and the parking areas. All bicycle lanes shall be designed, constructed, posted, marked, and striped according to the city's standards and specifications.

(Ord. No. 4225, art. 1, 5-16-11)

### Sec. 25-911. Sidewalks and trails.

At the time street improvements are installed or development of property occurs, sidewalks shall be constructed as required in street standards, Table A. There shall be a minimum of two and one-half (2.5)

feet between the curb of the street and the sidewalk. Sidewalks shall be constructed in accordance with the city's standards and specifications. Sidewalks must be in acceptable condition at the time occupancy permits are issued. The requirement for sidewalks may be waived under the following circumstances, as approved by the city manager:

(a) Better pedestrian and bicycle access and connectivity is provided by an off-street trail that connects to sidewalks or other trails;

(b) If there are no other sidewalks within five hundred (500) feet of the property;

(c) If the topography of the site is such that sidewalks are not feasible. Multimodal trails shall be at least ten (10) feet in width and designed, posted and marked in accordance with the city's standards and specifications. A public access easement of appropriate width shall be granted for all public trails.

(Ord. No. 4225, art. 1, 5-16-11; Ord. No. 4407, art. 1, 12-17-12)

### Sec. 25-912. Driveways.

Additional regulations for driveways are contained in chapter 24. Spacing requirements for the distance between driveways is included in article X, access management. Sidewalks constructed within a driveway shall be in accordance with the city's standards and specifications. The following driveway design criteria are required:

| Driveway Design Criteria | Local Streets | Collector Streets | Arterial Streets |
|---|---|---|---|
| Maximum width at end of radius | 10 feet—30 feet | 10 feet—30 feet | 14 feet—40 feet |
| Radius | Maximum of 15 feet | Maximum of 25 feet | Maximum of 55 feet |
| Maximum grade on right-of-way* | ¼ inch per 1 foot | ¼ inch per 1 foot | ¼ inch per 1 foot |

*\A waiver may be granted by the city manager.

(a) *Common driveways.* Common driveways serving two (2) adjacent properties may be allowed subject to the same width requirements as any other driveway. Cross access easements shall be provided.

(b) *Multifamily residential, commercial and manufacturing driveway throat length.* The driveway throat length should minimize or eliminate the condition where inbound traffic queues back onto a street. The throat length also provides for a place for exiting vehicles to queue, better

definition of the driving lanes, and separation between the parking area and the adjacent street. Driveway throat lengths shall meet the following requirements and should be based on the ultimate street section anticipated:

(1) All driveways shall provide at least fifty (50) feet of throat length adjacent to local and collector streets and one hundred (100) feet adjacent to arterial streets.

(2) For driveways serving between one hundred (100) and four hundred (400) vehicles in the peak hour (two-way traffic volumes) the driveways shall provide at least one hundred twenty-five (125) feet of throat length.

(3) For driveways serving over four hundred (400) vehicles per hour (two-way traffic volume) and for all driveways controlled by a traffic signal, adequate throat length shall be determined by a transportation traffic study.

(4) For driveways serving extremely low volumes (ten (10) vehicles or less in the peak hours) on low volume streets (less than one hundred (100) vehicles existing or projected in any hour), low speed (twenty-five (25) miles per hour speed limit) streets, a throat depth of thirty (30) feet may be permitted at the city manager's discretion.

(c) *Accommodation of pedestrians.* All driveways serving multifamily residential, commercial and manufacturing uses must adequately accommodate pedestrians using sidewalks or trails.

(d) *Accommodation of bicycles.* Where a new driveway serving multifamily residential, commercial or manufacturing uses crosses a bicycle facility (such as a dedicated bike path or an on-street bike lane), the driveway should be designed so as to accommodate the safe crossing of bicyclists. Likewise, when a new bicycle facility is built that crosses existing driveways, the bicycle facility should be designed with safe crossings in mind.

(e) *Driveway extensions.* Driveways must extend to a garage, carport, or parking area adjacent to a driveway.

(f) *Culverts.* Culverts shall be required in accordance with the city's standards and specifications. It shall be at the expense of the property owner to install, maintain and replace culverts.

(Ord. No. 4225, art. 1, 5-16-11; Ord. No. 4407, art. 2, 12-17-12)

**Secs. 25-913—25-1000. Reserved.**

## ARTICLE X. ACCESS MANAGEMENT

Sec. 25-1001. General.

Sec. 25-1002. Definitions.

Sec. 25-1003. Applicability.

Sec. 25-1004. Standards.

Sec. 25-1005. Driveway spacing requirements; multifamily residential, commercial and manufacturing uses.

Sec. 25-1006. Driveway spacing requirements; single-family, duplex (two-family) and townhouse residential uses.

Secs. 25-1007—25-1100. Reserved.

### Sec. 25-1001. General.

Access management is the careful planning and design of driveways, median openings, and property connections to a roadway. Access management takes a comprehensive view of property access relative to the function of the streets from which it is provided. The objective of access management is to optimize, or find the right balance, between property access and traffic safety and efficiency, particularly along arterial streets. In other words, access is viewed in the context of the street system instead of just the individual property. The objective of this article is to avoid increased conflicts caused by access points in already developed areas and to prevent the creation of problems in the future.

(Ord. No. 4225, art. 2, 5-16-11)

### Sec. 25-1002. Definitions.

[The following words, terms and phrases, when used in this article, shall have the meanings ascribed to them in this section, except where the context clearly indicates a different meaning:]

*Connection*. Any driveway, street, turnout or other means of providing for the movement of vehicles to or from the roadway system.

*Cross access.* A service drive that provides vehicular access between two (2) or more abutting sites so that the driver need not enter the street system to move between them.

*Development.* Any manmade change in improved and unimproved real estate, including, but not limited to, buildings or other structures, mining, dredging, filling, grading, paving, diking, berming, excavation, drilling operations, or storage of equipment or materials.

*Frontage street.* A local street that is used to provide alternative access to property from a street with higher functional classification; frontage streets typically run parallel to an arterial street and provide access at the front of a line of adjacent properties.

*Functional area.* The area surrounding an interchange or intersection that includes the space needed for drivers to make decisions, accelerate, decelerate, weave, maneuver, and queue for turns and stop situations.

*Median.* A barrier that separates opposing flows of traffic. Raised medians (with curbs and a paved or landscaped area in the center) are generally used in high traffic areas.

*Queue storage.* That portion of a traffic lane that is used to temporarily hold traffic that is waiting to make a turn or proceed through a traffic control device such as a stop sign or traffic signal.

*Right-in, right-out.* A driveway where left turns are prohibited either by physical or regulatory means.

*Sight distance.* The distance visible to the driver of a passenger vehicle measured along the normal travel path of a roadway to a specified height above the roadway when the view is unobstructed to oncoming traffic.

*Street.* All property dedicated for public or private street, highway, freeway or roadway purposes or subject to public or private easement therefore.

*Street, arterial.* A street or road of considerable continuity which serves or is intended to serve as a principal trafficway between separate areas or districts and which is the main means of access to the collector street system, highways, and expressways.

*Street, collector.* Streets, which in addition to servicing abutting properties, intercept local streets, connect with community facilities and carry neighborhood traffic to the arterial street systems.

*Street, cul-de-sac*. A short independent street terminating in a circular turnaround.

*Street, local.* A street designated to provide access to abutting property from collector and arterial streets.

*Street, loop.* A short independent street which terminates along the same street as its origin.

*Throat length.* The distance parallel to the centerline of a driveway to the first on-site location at which a driver can make a right turn or a left turn. On roadways with curb and gutter, the throat length shall be measured from the back of the curb. On roadways without a curb and gutter, the throat length shall be measured from the edge of the shoulder.

*Two-way left-turn lane (TWLTL).* A lane located between opposing traffic flows which provides a transition area for left-turning vehicles.

(Ord. No. 4225, art. 2, 5-16-11)

## Sec. 25-1003. Applicability.

The provisions of this article are not retroactive. Existing nonconforming properties may continue in the same manner as they existed prior to the adoption of this article. Properties with nonconforming access connections shall be allowed to continue, but must be brought into compliance with this article to the maximum extent possible when modifications to the street system are made or when a change in use or redevelopment of the property occurs, and one (1) or more of the following conditions are met:

(a) When a new connection or modification of an existing connection is requested or required.

(b) When a site plan for a new development or the redevelopment of a property is submitted.

(c) If the principal activity on a property is discontinued for a period of one (1) year or more, or construction has not been initiated for a previously approved site plan within a period of one (1) year from the date of approval.

(Ord. No. 4225, art. 2, 5-16-11)

## Sec. 25-1004. Standards.

(a) *Cross access.* In order to minimize access points on arterial streets, adjacent multifamily residential, commercial or manufacturing uses shall provide a cross access drive and pedestrian access way to

allow circulation between adjacent developments. This requirement shall also apply to a building site that abuts an existing developed property. Property owners shall record all necessary easements and agreements, including an easement allowing cross access to and from the adjacent properties and a joint maintenance agreement defining maintenance responsibilities of property owners that share the cross access system.

(b) *Truck movements.* Driveways and internal circulation must be designed to accommodate the largest truck anticipated to serve the development. Vehicle turning paths need to be provided such that trucks do not encroach over curbs and medians. Any encroachment into opposing turning lanes should be minimized and should be consistent with the scale of the development and the frequency and timing of truck movements. Truck circulation through a development site should minimize conflicts with customer traffic. Loading docks should be configured such that parked trucks do not impede normal traffic flow.

(c) *Restrictive medians.* Restrictive medians shall prohibit vehicles from crossing the median except at designated median openings. Restrictive medians shall provide refuge for pedestrians at intersections and shall be ADA accessible. Restrictive medians shall be required if all of the following conditions are met:

(1) On arterial streets with four (4) or more lanes;

(2) Speeds posted at forty-five (45) mph or above;

(3) Adjacent to left turn lanes at signalized intersections where driveways are present within the intersection functional area;

(4) Adjacent to dual left turn lanes.

(d) *Median openings.* The minimum spacing standards for full median openings shall be one-quarter (¼) mile subject to the limitations below:

(1) Median openings shall not be permitted within the functional area of an interchange.

(2) Median openings shall not be permitted where an opening would be unsafe due to inadequate sight distance requirements.

(3) Directional median openings may be provided at any connection that meets the connection spacing requirements.

(4) Left turn lanes shall be required at all median openings. Median openings shall not be permitted where adequate queue storage cannot be provided for the left turn lanes.

(e) *Connection spacing.* Connections to arterial streets shall conform to the following requirements:

(1) Be located outside any interchange or intersection functional areas.

(2) Provide sufficient separation for provision of warranted or required right turn lanes and left turn lanes.

(3) Be aligned with existing or planned connectors on the opposite side of the street (except where movements are limited to right turns in and right turns out).

(4) If offset from connections on the opposite side of the street (where no restrictive median is in place), minimum separations (measured from centerline to centerline) shall be:

a. Arterial: Five hundred thirty (530) feet;

b. Collector: Two hundred fifty (250) feet;

c. Left-in only movements must be controlled through the use of a restrictive median.

(5) Connections to limited access streets, as identified on the street classifications map, shall be streets only and not driveways into individual properties. The connection spacing for these streets shall conform with the following table:

| Undivided Street | Divided Street | | |
|---|---|---|---|
| | All movements | Right turn in<br>Right turn out | Directional opening* |
| 990—2,640 feet | 1,320—2,640 feet | 330—990 feet | 660—1,320 feet |

Range to be determined by the city manager.

* Typically designed for left turns from the major roadway or left turns and u-turns.

(f) *TWLTL.* Continuous two-way left turn lanes are discouraged, but shall be considered for:

(1) Collector streets adjacent to property that is developed as or planned for commercial development.

(2) Areas where there is a need for frequent left turn lanes.

(Ord. No. 4225, art. 2, 5-16-11)

### Sec. 25-1005. Driveway spacing requirements; multifamily residential, commercial and manufacturing uses.

| Posted Speed of Street<br>(mph) | Minimum Separation<br>Between Driveways (feet) |
|---|---|
| 25 | 105 |
| 30 | 125 |
| 35 | 150 |
| 40 | 185 |
| 45 | 230 |
| 50 | 275 |

| | |
|---|---|
| 55 | 330 |

The distance between driveways is measured from near edge to near edge of adjacent driveways. Where a parcel lacks sufficient frontage to meet the above requirements, the owner may: 1) seek a variance, but in no case can the variance permit spacing be less than the next lowest classification, or 2) agree to establish a common driveway with adjacent owners and provide for cross access between properties.

(Ord. No. 4225, art. 2, 5-16-11)

### Sec. 25-1006. Driveway spacing requirements; single-family, duplex (two-family) and townhouse residential uses.

Only one (1) driveway shall be allowed for single-family residential lots with less than eighty (80) feet of frontage. No more than two (2) driveways shall be allowed for any single-family residential lot. No more than one (1) driveway shall be allowed for each side of a duplex, or two-family residential structure. Driveways shall be a minimum of ten (10) feet apart, measured from the ends of the radii at the curbline. The required spacing between driveways may be waived due to elevation differences between them.

(Ord. No. 4225, art. 2, 5-16-11)

### Secs. 25-1007—25-1100. Reserved.

## ARTICLE XI. UTILITIES

Sec. 25-1101. Applicability.

Sec. 25-1102. Definitions.

Sec. 25-1103. In general; utilities.

Sec. 25-1104. In general; water and sanitary sewer mains.

Sec. 25-1105. In General; water and sanitary sewer connections.

Sec. 25-1106. Sanitary sewer connections.

Sec. 25-1107. Water connections.

Sec. 25-1108. Stormwater.

Sec. 25-1109. Private utilities.

Secs. 25-1110—25-1200. Reserved.

### Sec. 25-1101. Applicability.

The provisions of this article are not retroactive. Existing nonconforming properties may continue in the same manner as they existed prior to the adoption of this article. Properties in nonconformance shall be allowed to continue, but must be brought into compliance with this article to the maximum extent possible when modifications to the utility system are made or when a change in use or redevelopment of the property occurs, and one (1) or more of the following conditions are met:

(1) When a new connection or modification of an existing connection is requested or required.

(2) When a site plan for a new development or the redevelopment of a property is submitted.

(3) If the principal activity on a property is discontinued for a period of one (1) year or more, or construction has not been initiated for a previously approved site plan within a period of one (1) year from the date of approval.

(Ord. No. 4225, art. 3, 5-16-11)

### Sec. 25-1102. Definitions.

As used in this article, the following definitions apply:

*Agent.* A person legally authorized to act for another.

*Building service line.* The portion of a water line or sewer line that connects the building to the public water or sewer line.

*Development.* Any manmade change in improved and unimproved real estate, including, but not limited to, buildings or other structures, mining, dredging, filling, grading, paving, diking, berming, excavation, drilling operations, or storage of equipment or materials

*Main.* The major lines or pipes used to supply a service a number of customers or an entire area.

*Public sewer.* A sewer which all owners of abutting properties have equal rights, and is controlled by public entity.

*Sanitary sewer.* A sewer which carries sewage and to which storm, surface, and groundwaters are not admitted.

*Service line.* The pipe, fittings, valves, meter, meter box, and all other fixtures owned by the city and used to connect the customer's installation to the main.

*Sewage.* Water-carried wastes from residences, business buildings, institutions and industrial establishments.

*Standard specifications.* The City of Cape Girardeau standard specifications and drawings, as may be amended, on file with the city clerk.

(Ord. No. 4225, art. 3, 5-16-11)

## Sec. 25-1103. In general; utilities.

(a) *Easements (utility and drainage).* All proposed developments shall have easements as determined by the city manager or his designee to be adequate for the installation and maintenance of utility facilities, including, at a minimum, utility easements ten (10) feet in width adjacent to the right-of-way of all streets and ten (10) feet in width across the rear of all lots adjacent to the rear lot lines. The city manager or his designee may also require additional utility easement width adjacent to side lot lines and adjoining each other to provide utility access between front lot and rear lot corridors. If an easement does not follow a property line, the easement shall not be less than twenty (20) feet in width. Easements shall comply with all other applicable city ordinances.

(b) *Excavations to be guarded by barricades, lights; damaged public property to be restored.* All excavations for any utility shall be adequately guarded with barricades and lights so as to protect the public from hazard. Any work within ROW shall be done in compliance with all other applicable city ordinances.

(c) *Owner to make connections prior to street pavement.* It shall be the duty of every person owning property fronting or abutting on any street or alley, before the street or alley is paved, to connect such property from the main to the property line, so that a connection, from the building/unit, can be made later without disturbing the pavement of such street or alley.

(Ord. No. 4225, art. 3, 5-16-11)

## Sec. 25-1104. In general; water and sanitary sewer mains.

(a) *Design and construction standards.* The city shall establish and maintain design and construction specifications and standards for the installation of all mains and service lines. In the design of mains, standard specifications shall govern.

(1) All developments shall have an approved water and/or sanitary sewer system that provides adequate potable water and sewer service to each lot, if applicable. All systems shall be designed and constructed in accordance with applicable city ordinances and standard specifications, and regulations of the Missouri Clean Water Commission and Missouri Department of Natural Resources.

(2) Where an approved sewer system is within two hundred (200) feet, that meets the requirements of the city and the Missouri Department of Natural Resources, the developer shall connect with such system and provide adequate service lines to each lot.

(3) Water systems shall be designed to provide adequate fire flow within the development. If additional upgrades are required in the system, in order to achieve adequate flows, the

developer shall absorb all costs associated with the upgrades, unless otherwise approved by the city manager.

(b) *Improvement plans.* See improvement plans section of chapter 25, article XIII.

(c) *Permit required.* No unauthorized person shall uncover, make any connections with or opening into, use, alter or disturb any public sewer or water line or appurtenance thereof, without first obtaining a written permit from the city manager or his designee.

(d) *Materials generally.* All materials, of whatever nature, required in the construction of the work embraced shall be furnished by the contractor and shall be subject to inspection and standard testing by the city manager or his designee, before being placed. All rejected materials shall at once be removed from the project site.

(e) *Inspection.* An inspector shall be on the job at all times while pipe is being laid or before it is backfilled, and shall inspect the work as it progresses. It shall be the duty of the contractor to see that no pipes are backfilled in the absence of the inspector and any pipe laid may be removed and relaid before acceptance, as determined by the city manager or his designee.

(f) *Work in custody of developer until accepted by city.* Until work has been accepted by the city council, it shall be in the custody and under the charge and care of the developer. The developer shall rebuild, repair, restore, or make good, at his expense, any lost or stolen materials, and all injuries or damages to any portion of the work before its completion and acceptance, caused by the action of the elements or from any other reason.

(g) *Acceptance.* See improvement plans section of chapter 25, article XIII.

(h) *Extension of mains; generally.*

(1) The extension of sewer or water distribution mains may be initiated and made in one (1) of the following ways:

a. Any individual, groups of individuals, corporation, association, institution, club or other parties desiring to become customers of the public system, may upon approval of proper application and as otherwise herein provided, extend the city's mains. All extensions shall be wholly within the corporate city limits or the property to be served must be covered under an executed voluntary annexation agreement.

b. The city may install and extend mains essential to providing adequate service to an area.

c. The city council may declare the necessity for and direct the extension of mains as a public improvement.

(2) All applications for permission to make extensions shall be submitted in writing to the city manager or his designee, who shall approve or disapprove such application. The application shall clearly indicate the desired route and approximate length of the extension and that the applicant agrees to the following:

a. To construct the entire extension from the end of the existing main to and across the entire frontage, rear, side, or other dimension of the lot or tract to be served as determined by the city manager or his designee. Such extension shall be of pipe size, as determined by the city manager or his designee, which will provide adequate service to the area, but in no case shall the pipe size be less than eight (8) inches for sewer main extensions and eight (8) inches for water main extensions.

b. To locate and construct the extension in accordance with the regulations, standard specifications and requirements of the city, and under the inspection and direction of the city manager or his designee. The applicant shall provide the design, construction specifications, and materials list necessary for the extension.

c. Upon completion, and after passing final inspection and tests, to transfer ownership of the complete main extension to the city in consideration of its perpetual upkeep and maintenance. The city shall not be required to provide service or to perform maintenance on such main extension until after the transfer of ownership has been completed.

d. To assume the cost of the entire extension. Valves and fire hydrants shall be installed by the applicant at locations determined by the city manager or his designee. Valves and fire hydrants shall be in conformance with city standards and specifications.

e. The cost of system improvements such as additional pumping or storage equipment to provide adequate service to the area to be extended as required by the department is included in the costs assumed by the applicant, unless otherwise approved by the city manager.

(3) The city manager or his designee shall determine the priority of need and the location of mains to be installed by the city. Such determination shall consider the actual needs of the area to be served as well as the availability of funds. The city may install and extend mains under any of the following conditions:

a. Through an undeveloped area to bring service to a developed or developing area.

b. To provide an increase in volume or pressure to a developed area.

c. To close loops in the system to provide circulation and increased volume.

d. To connect and bring service to a system other than the city's for the purpose of taking over or acquiring such system.

e. For the purpose of replacing, to bring up to city standards, mains which are acquired from others.

f. Any other reason which, in the opinion of the city manager or his designee, is essential to providing adequate service to an area.

(4) Extension of mains as a public improvement may be paid for by special assessments in accordance with existing laws of the city and state, or from revenues of the utility service as directed by the city council.

(5) When a customer requests a connection to be made from main which has been installed at the sole expense of the city, such customer shall pay to the city a fee as outlined on the city fee schedule.

(6) Private water mains shall be prohibited.

(7) Private water wells in the city limits shall be prohibited, unless otherwise approved by the city manager. Existing private water wells will be allowed to remain until such time a change in use occurs unless otherwise approved by the city manager.

(i) *Relocation or adjustment of mains.* Relocation or adjustment in elevation of an existing main or appurtenances required because of changes proposed by a property owner or other private party shall be made under the direction and inspection of the city manager or his designee at no cost to the city.

(j) *Adjustment of elevation over existing mains.* Relocation or adjustment of an existing main or appurtenances required because of elevation changes over the existing main or appurtenances proposed by a property owner or other private party, shall be made under the direction and inspection of the city manager or his designee at no cost to the city.

(Ord. No. 4225, art. 3, 5-16-11; Ord. No. 4407, arts. 3, 4, 12-17-12)

## Sec. 25-1105. In General; water and sanitary sewer connections.

(a) *Costs to be borne by owner.* All costs and expense incidental to the installation and connection of the building service line to the public main shall be borne by the owner. The owner shall indemnify the city from any loss or damage that may directly or indirectly be occasioned by the installation of the building service line.

(b) *Connections to conform to requirements of plumbing code.* The service line from the building/unit to the public main shall be of material meeting the specifications and construction methods as set out in the plumbing code of the city and standard specifications.

(c) *Penalty for violation of provisions.* Any owner, who shall fail to begin, after five (5) days' written notice served on him by anyone authorized to serve such notice, and to prosecute diligently to the completion the making of a connection as provided in section 29-39, or who shall violate any of the provisions of this article, shall be deemed guilty of a misdemeanor, and upon conviction shall be punished as prescribed in section 1-8 of this Code.

(d) *Separate building service lines required.* A separate and independent building service line shall be provided for every building/unit unless otherwise approved by the city manager or his designee.

(e) *Construction to conform to provisions of city building and plumbing codes.* The size, slope, alignment, materials of construction of a building service line and the methods to be used in excavating, placing of the pipe, joining, testing and backfilling the trench, shall all conform to the requirements of the building and plumbing code and/or the city standards and specifications.

(f) *Connections to conform to building, plumbing code requirements; exception.* The connection of the building service line into the public main shall conform to the requirements of the building and plumbing code or other applicable rules and regulations of the city. All such connections shall be made airtight and watertight. Any deviation from the prescribed procedures and materials must be approved by the city manager or his designee before installation.

(g) *City manager to inspect, supervise main connection to public main.* As soon as a connection of a main is ready to be made to an existing main, the party making such connection shall notify the city manager or his designee, giving a reasonable time in which inspection of same can be made. In the event that such connection has not been properly made in accordance with the provisions of this article, or any other ordinance of the city, it shall be unlawful for such party to make use of the main until the connection has been properly made and approved.

(h) *City manager to inspect, supervise building/unit connection to public main.* The applicant for the permit shall notify the city manager or his designee when the building/unit connection is ready for inspection and connection to the public main. The connection shall be made under the supervision of the city manager or his designee.

(Ord. No. 4225, art. 3, 5-16-11)

## Sec. 25-1106. Sanitary sewer connections.

Wyes and mains shall comply with the regulations of the Missouri Clean Water Commission and the city, and shall be constructed under the observation and inspection of the city manager or his designee, and shall be accepted by the city council.

(a) *Sewers planned.* Where an approved public sanitary sewer is not within two hundred (200) feet, but where plans for installation of sanitary sewers in the vicinity of the development have been prepared and approved, the developer shall install sewers in conformity with such plans, although a connection to an existing main may not be immediately practicable as agreed to and approved by the city manager or his designee. In such cases, and until a connection is made

with an approved public system, the use of a privately owned and maintained sewage treatment facility will be permitted, provided such disposal facilities are constructed in accordance with the regulations and requirements of the Missouri Clean Water Commission and the zoning ordinance, and constructed under the observation and inspection of the city manager or his designee.

(b) *No sewers accessible.* Where no sewers are accessible, the developer shall install sewer lines and a disposal system in accordance with the requirements of the county health department.

(c) *Applicant to obtain location of sewer connection from city engineer.* Before proceeding with the work of making a connection of a sewer line to the public sewer, the applicant shall obtain the location of the wye branch for connection of the property from the office of the city engineer.

(d) *Permit required; issuance; fee.*

(1) It shall be the duty of every person before entering upon any street or alley, or easement granted to the city in the city, where public sewers have been constructed, and exist, for the purpose of connecting a building service line with the public sewers, or the repair of same, to obtain a written permit, which will authorize the applicant to connect such building service line with the public sewer. The permit shall be issued by city manager or his designee, upon approval of a written application made to the city by the applicant.

(2) The fee for such permit shall cover the cost of issuing the permit and subsequent inspection of the work as outlined on the city fee schedule.

(3) There shall be two (2) classes of building sewer permits:

a. For residential and commercial service, and

b. For service to establishments producing industrial wastes.

In either case, the owner or his agent shall make application on a special form furnished by the city. The permit application shall be supplemented by any plans, specifications or other information considered pertinent in the judgment of the city manager or his designee. A permit and inspection fee for a residential or commercial building sewer permit and for an industrial building sewer permit shall be paid to the city at the time the application is filed. Fee amounts are outlined on the city fee schedule.

(4) For the purpose of providing funds for sewer improvements, retirement of indebtedness for sewer improvements, and local matching funds for the state and federal grants, there is hereby authorized and directed to be charged and collected a sewer connection fee for every new facility hereinafter connected, directly or indirectly through other sewers to the sanitary sewer system of the city.

(5) Sewer connection fees for new facilities will be based on the size of the water tap serving such facility, as outlined on the city fee schedule.

(6) A new facility is defined as any facility which makes a new connection to city sewers, either directly or indirectly, or which increases its water tap size.

(7) Such sewer connection fees as established by this section shall be payable and collected in advance of the issuance of any permit to connect to such sanitary sewer system.

(8) Any new facility that pays a sewer connection fee pursuant to this section and later increases its water tap size will be subject to the appropriate fee as established herein for its new water tap size except that it shall receive credit for sewer connection fees previously paid pursuant to this section for the smaller water tap size.

(9) The fees established herein are subject to change in accordance with the laws of the state.

(e) *Connections to surface water, groundwater sources prohibited.*

(1) Connections to sanitary sewers which terminate in basements of uncompleted buildings or buildings under construction shall be tightly stopped so as to prevent the entrance of surface water into the sanitary sewer. Uncovered basements collecting rainwater, or water from other sources, must be dewatered by the pumping of same. In no event may such water enter a sanitary sewer.

(2) Existing sewer connections to sanitary sewers, which carry water from roof drains, yard drains and uncovered areaways, shall be so altered as to permit the passage of sanitary sewage only. Roof drains shall be arranged to discharge on the surface of the ground a minimum of four (4) feet behind the right-of-way line on the owner's property.

(3) No person shall make connection of roof downspouts, exterior foundation drains, areaway drains or other sources of surface runoff or groundwater to a building service line or building drain which in turn is connected directly or indirectly to a public sanitary sewer.

(f) *Connections to public sewers in district outside property boundaries; requirements generally.*

(1) Any person owning a lot or parcel of land lying outside the boundaries of a sewer district in which a sanitary sewer has been constructed, may, upon written application to the city council, be permitted to connect such lot or parcel of land with such sewer upon payment to the required fee as outlined in the city fee schedule. In the case where several buildings are to be connected to a public sewer with a line of such size as is approved by the city engineer, the fee shall be the same for each building served. In the case of industrial buildings, for which application to connect to the public sewer is made, the city manager or his designee shall determine the amount of payment to be made, and it may further place certain restrictions on the use of such connection as concerns the volume and character of the sewage to be discharged into the public sewer.

(2) The person making the application and obtaining a permit to proceed with a connection shall pay the entire cost of all costs associated for such connection.

(3) The fee paid for the authority to make such connection shall in no way be taken as the purchase price of any vested right in such public sewer, but same shall be deemed and held as rental money for the sewer to which connection has been made, until such time as sewers shall be constructed in the district in which such connecting property lies, at which time the property shall be assessed its proportionate share of the cost of such construction as if the previous connection outside the district did not exist. Also, at the time such sewers are constructed no refund of the fee collected by the city shall be refunded, as same shall be used in the maintenance of the sewer system in which the connection was made.

(4) The city manager or his designee shall keep a special record showing all receipts and connections so made.

(5) The connections above described shall conform to all the provisions of this article.

(g) *Wye branches on public sewers to be used; exception.* The wye branches on the public sewer shall be used in all cases, unless written permission is obtained from the city manager or his designee to make a connection at a different location.

(h) *Damaged wye branches; replacement.* When a wye branch on the public sewer is damaged during the work of connecting to same, it shall be removed and replaced as directed by the inspector, with a new section of pipe of the same diameter and meeting standard specifications, and inspected by an authorized inspector. All costs shall be borne by the developer.

(i) *Old building sewers; when permitted.* Old building sewers may be used in connection with new buildings only when they are found, on examination and test by the city manager or his designee, to meet all requirements of this article.

(j) *Elevation requirements.* Whenever possible, the building service line shall be brought to the building at an elevation below the basement floor. In all buildings in which any building drain that is too low to permit gravity flow to the public sewer, sanitary sewage carried by such building drain shall be lifted by an approved means and discharged to the building service line. Such means shall be owned and maintained by the property owner.

(Ord. No. 4225, art. 3, 5-16-11)

## Sec. 25-1107. Water connections.

Taps and mains shall comply with the regulations of the Missouri Department of Natural Resources and the city, and shall be constructed under the observation and inspection of the city manager or his designee, and shall be accepted by the city council.

(a) *Permit required; issuance; fee.*

(1) It shall be the duty of every person before entering upon any street or alley, or easement granted to the city in the city, where public water mains have been constructed, and exist, for the purpose of connecting a building water line with the public water main, or the repair of same, to obtain a written permit, which will authorize the applicant to connect such building water line with the public water main. The permit shall be issued by city manager or his designee, upon approval of a written application made to the city by the applicant.

(2) The fee for such permit shall cover the cost of issuing the permit and subsequent inspection of the work as outlined on the city fee schedule.

(3) The water connection fee for making a tap onto a public water main is based on the size of the water tap serving the facility, as outlined on the city fee schedule.

(Ord. No. 4225, art. 3, 5-16-11)

## Sec. 25-1108. Stormwater.

*Storm sewers.* Storm drainage improvements consisting of storm sewers or open channels shall adequately drain the areas being developed. The design of drainage improvements shall be coordinated to the extent possible with present and probable future improvements so as to form part of an integrated system. Adequate provisions shall be made for the disposal of stormwater, in accordance with the specifications and standards of the city, and subject to the inspection and approval of the city manager or his designee.

(Ord. No. 4225, art. 3, 5-16-11)

## Sec. 25-1109. Private utilities.

*Underground wiring.* All electric, cable and telephone distribution lines shall be installed underground, except those overhead distribution feeder lines necessary to serve the development and in locations as approved by the city manager or his designee. Cable switching enclosures, pad-mounted transformers, and service pedestals may also be installed aboveground and may be installed as a part of the street lighting standards where approved by the city manager or his designee. Private utilities shall be in accordance with all other applicable city ordinances.

ARTICLE XI. UTILITIES

(Ord. No. 4225, art. 3, 5-16-11)

**Secs. 25-1110—25-1200. Reserved.**

## ARTICLE XII. SUBDIVISIONS

Sec. 25-1201. Short title.
Sec. 25-1202. Definitions.
Sec. 25-1203. Authority.
Sec. 25-1204. Jurisdiction.
Sec. 25-1205. Purpose.
Sec. 25-1206. Separability.
Sec. 25-1207. Amendments.
Sec. 25-1208. Approval of subdivision plats.
Sec. 25-1209. Vacation of subdivisions.
Sec. 25-1210. Variances and exceptions.
Sec. 25-1211. Minor subdivisions.
Sec. 25-1212. Platting exceptions.
Sec. 25-1213. Administration.
Sec. 25-1214. Appeals.
Secs. 25-1215—25-1225. Reserved.
Sec. 25-1226. Submission of preliminary plat.
Sec. 25-1227. Review of preliminary plat by commission.
Sec. 25-1228. Review of preliminary plat by council.
Sec. 25-1229. Sectionalizing.
Sec. 25-1230. Submission of record plat.
Sec. 25-1231. Filing of record plat.
Sec. 25-1232. Requirements of record plat.
Sec. 25-1233. Subdivision review fees.
Secs. 25-1234—25-1249. Reserved.
Sec. 25-1250. Single-family residential lot design standards.
Sec. 25-1251. Multifamily dwelling unit subdivision design standards.
Sec. 25-1252. Cluster subdivisions.
Secs. 25-1253—25-1299. Reserved.

### Sec. 25-1201. Short title.

These regulations shall hereafter be known, cited and referred to as "The Subdivision Regulations of the City of Cape Girardeau, Missouri."

(Ord. No. 4225, art. 4, 5-16-11)

## Sec. 25-1202. Definitions.

As used in this chapter the following definitions apply:

*Area* means the incorporated area of the city and any future annexations thereto, and any area over which the city exercises legal zoning regulatory power commonly referred to as extraterritorial zoning authority.

*Benchmark* means a definite point of known elevation and location and of more or less permanent character.

*Block* means an area of land surrounded by public highways, streets, streams, railroad rights-of-way, parks or other similar areas or facilities.

*Building line* means a line on a plat between which line and the street right-of-way no portion of the building may be erected, excluding landings, open balconies and roof overhangs, subject, however, to the further requirements of the zoning ordinance.

*City* means the City of Cape Girardeau, Missouri.

*Collector street.* See *Street, collector.*

*Commission* means the planning and zoning commission of the city.

*Common land* means that land set aside for open space or recreational use for the owners of the residential lots in a subdivision, which land is conveyed by the developer in fee simple absolute title by a warranty deed to trustees whose trust indenture shall provide that such common land be used for the sole benefit, use and enjoyment of the lot owners present and future, and shall further provide that no lot owner shall have the right to convey his interest in the common land except as an incident of the ownership of a regularly platted lot in the subdivision.

*Comprehensive plan* means a plan or any portion thereof for the coordinated development of the city, adopted by the planning and zoning commission, pursuant to RSMo Chapter 89.

*Dead-end street* means a street having only one (1) end open for vehicular traffic and the other permanently terminated by a turnaround for vehicles.

*Developer* means that person by whom a tract will be subdivided or improved pursuant to the requirements of this chapter.

*Development* means any man-made change in improved and unimproved real estate, including, but not limited to, buildings or other structures, mining, dredging, filling, grading, paving, diking, berming, excavation, drilling operations, or storage of equipment or materials.

*Easement* means a grant by a property owner to the public, a corporation, or a person of the use of land for a specific purpose, such as road maintenance and improvements, installation of sewers and utilities.

*Engineer* means a professional engineer registered in the state.

*Escrow agent* means a title company, bank, savings and loan association, trust company, attorney or any other person or agency approved by the city council to act as escrow agent under the provisions of this chapter.

*Floodplain* means a geographic area susceptible to periodic inundation from overflow of natural waterways and determined as to extent by the city council, and any further revisions thereto.

*Frontage* means that edge of a lot bordering a street.

*Highway.* See *Street.*

*Improvement* means street pavement, sidewalk grading, sidewalk pavement if included by developer, pedestrianway pavement, water mains, storm sewers, sanitary sewers, signs, monuments or other similar items.

*Improvement plans* means the engineering drawings showing types of materials and construction details for the physical structures and facilities, excluding dwelling units to be installed in conjunction with the development of the subdivision.

*Land surveyor* means a land surveyor registered in the state.

*Local street.* See *Street, local.*

*Lot* means a platted parcel of land intended to be separately owned, developed or otherwise used as a unit.

*Lot area* means the total horizontal area within the boundaries of a lot exclusive of any area designated for street purposes.

*Lot, corner*, means a lot abutting upon two (2) or more streets at their intersection.

*Lot, double frontage*, means a lot having frontage on two (2) nonintersecting streets, as distinguished from a corner lot.

*Minor subdivision.* See *Subdivision, minor.*

*Record plat* means that subdivision plat containing the signature of the city clerk which designates final approval by the city council and is recorded in the office of the county recorder of deeds.

*Road.* See *Street.*

*Slope* means the rate of deviation of the ground surface from the horizontal surface, as expressed in percentages.

*Street* means all property dedicated for public or private street, highway, freeway or roadway purposes or subject to public or private easement therefore.

*Street, arterial,* means a street or road of considerable continuity which serves or is intended to serve as principal trafficway between separate areas or districts and which is the main means of access to the collector street system, highways, and expressways.

*Street, collector*, means streets, which in addition to servicing abutting properties, intercept local streets, connect with community facilities and carry neighborhood traffic to the arterial street systems.

*Street, local*, means streets designated to provide access to abutting property from collector and arterial streets.

*Street, service or frontage*, means a local street generally parallel to and adjacent to arterial streets and highways, which provides access to abutting properties and protection from through traffic.

*Subdivision* means either or both of:

(a) A division or redivision of a tract into lots, plats, or sites; or

(b) The dedication or establishment of a street, alley, pedestrian or public way in conjunction with or used in any such tract.

*Subdivision, minor,* means the division of land into not more than four (4) lots shall be classified as a minor subdivision provided:

(a) That the proposed subdivision of land does not include an improvement within a street right-of-way, other than concrete sidewalks, grading, monuments and water mains.

(b) That the proposed subdivision of land does not include a provision for a public area or public facility.

(c) That the proposed subdivision of land does not adversely affect the development of the parcel proposed for subdivision as well as the adjoining property.

(d) That the proposed subdivision of land is not in conflict with any provision of the city's zoning ordinance or this chapter.

*Surety company* means an insurance company qualified and acting under the provisions of RSMo Chapter 379, which has met the requirements of RSMo § 379.020 and which is approved by the city council to act as surety under this chapter.

*Title company* means a corporation qualified and acting under the Missouri Title Insurance Law or a corporation which is an issuing agency for an insurance company insuring land titles.

*Tract* means an area or parcel of land which the developers intend to subdivide or improve, or to cause to be subdivided or improved, pursuant to the requirements of this chapter.

*Zoning ordinance* means chapter 30 of this Code, as amended, from time to time, which controls and regulates zoning in the city and other areas zoned by the city pursuant to state statutes.

(Ord. No. 4225, art. 4, 5-16-11)

## Sec. 25-1203. Authority.

By authority of the ordinances of the city council, adopted pursuant to the powers and jurisdictions vested through RSMo §§ 89.140 and 89.410 and other applicable laws, statutes, ordinances and regulations of the state and the city, the city council adopts these regulations to govern the subdivision of land, exercises the power and authority to review, approve and disapprove plats for subdivision of land within the incorporated areas of the city and any areas subject to extraterritorial zoning regulation by the city which show lots, blocks or sites with or without new streets or highways. By the same authority the city council exercises the power and authority to pass and approve the development of plat subdivision of land already approved by the city council or the county court if such plats are entirely or partially undeveloped. Such a plat will be considered to be entirely or partially undeveloped if:

(a) The plat has been recorded with the county recorder of deeds office prior to the annexation of the property, and by the city; and

(b) Less than forty (40) percent of the total platted lot area has been developed.

(Ord. No. 4225, art. 4, 5-16-11)

## Sec. 25-1204. Jurisdiction.

These subdivision regulations shall apply to all subdivisions of land located within the incorporated areas of the city or within any area subject to extraterritorial zoning regulation by the city.

(Ord. No. 4225, art. 4, 5-16-11)

## Sec. 25-1205. Purpose.

The purpose of this article is to control the division of land within the incorporated area of the city and within any area subject to extraterritorial zoning regulation by the city in order to promote the public health, safety, and general welfare of the area by regulating the division of land in order to lessen congestion in the streets and highways; to further the orderly development and appropriate use of land; to

establish accurate records of land subdivisions; to protect land title; to implement the master plan of the city; to secure safety from fire and other dangers; to facilitate adequate and coordinated provision for transportation, water, sewerage, schools, parks, playgrounds, and other public requirements; to facilitate the further division of larger tracts into smaller parcels of land; and, in general, to facilitate the orderly, coordinated, efficient and economic development of the city and the area.

(Ord. No. 4225, art. 4, 5-16-11)

### Sec. 25-1206. Separability.

If any part or provision of these regulations or application thereof to any person or circumstances is adjudged invalid by any court of competent jurisdiction, such judgment shall be confined in its operation to the part, provision or application directly involved in the controversy to which such judgment was rendered and shall not affect or impair the validity of the remainder of these regulations or the application thereof to other persons or circumstances. The city council hereby declares that it would have enacted the remainder of these regulations even without any such part, provision or application.

(Ord. No. 4225, art. 4, 5-16-11)

### Sec. 25-1207. Amendments.

(a) For the purpose of providing for or protecting the public health, safety and general welfare, the city council may from time to time amend the provisions imposed by these subdivision regulations. Public hearings on all proposed amendments shall be held by the city council in the manner prescribed by state statute and city ordinance.

(b) Approval of a preliminary plat shall exempt that subdivision from subsequent amendments to these subdivision regulations, providing the record plat is filed within the time specified by the city council in its approval of the preliminary plat.

(Ord. No. 4225, art. 4, 5-16-11)

### Sec. 25-1208. Approval of subdivision plats.

Every subdivision of land within the area shall be shown upon a plat and submitted first to the commission for its recommendation for approval or disapproval, and then to the city council for its approval or disapproval. All final record plats shall be submitted first to the commission for its recommendation and then to the city council for its consideration and approval or disapproval. All subdivision plats, whether sketch, preliminary or final, shall also be subject to review by the city manager. No plat shall be recorded in the office of the recorder of deeds and no lots shall be sold from such plat unless and until such plat is approved as provided in this article.

(Ord. No. 4225, art. 4, 5-16-11)

### Sec. 25-1209. Vacation of subdivisions.

Whenever any person may desire to vacate any subdivision or part thereof in which he shall be the legal owner of all of the lots or may desire to vacate any lot, such person may petition the city council giving a distinct description of the property to be vacated and the names of the persons to be affected thereby; which petition shall be filed together with a filing fee as established in the fee schedule. The city council may act upon such petition under the same procedures as set forth in this article for the establishment of subdivisions.

(Ord. No. 4225, art. 4, 5-16-11)

### Sec. 25-1210. Variances and exceptions.

(a) *General.* Where the city council finds that extraordinary hardships or practical difficulties may result from strict compliance with these regulations, it may approve variances or exceptions to these subdivision regulations so that substantial justice may be done and the public interest secured, provided that such variance or exception shall not have the effect of nullifying the intent and purpose of these regulations; and further provided, the city council shall not grant variances unless it shall make findings based upon the evidence presented to it in each specific case that:

(1) The granting of the variance will not be detrimental to the public safety, health or welfare or injurious to other property or improvements in the neighborhood in which the property is located.

(2) The conditions upon which the request for a variance is based are unique to the property for which the variance is sought, and are not applicable generally to other property.

(3) Because of the particular physical surroundings, shape or topographical conditions of the specific property involved, a particular hardship to the owner would result, as distinguished from a mere inconvenience, if the strict letter of these regulations are carried out.

(4) The variance will not in any manner vary the provisions of the zoning ordinance, master plan or major street plan.

(b) *Conditions.* In granting variances and exceptions, the city council may require such conditions as will, in its judgment, secure substantially the objectives or requirements of these regulations.

(c) *Procedures.* A petition for any such variance shall be submitted in writing by the developer at the time when the preliminary plat or record plat is filed for the consideration of the commission. The petition shall state fully the grounds for the application and all of the facts relied upon by the petitioner. Approval of the record plat by the city council shall constitute approval of any variances incorporated therein.

(Ord. No. 4225, art. 4, 5-16-11)

### Sec. 25-1211. Minor subdivisions.

The city manager may waive the requirement of submission of all other plans except the record plat, when considering minor subdivisions.

(Ord. No. 4225, art. 4, 5-16-11)

### Sec. 25-1212. Platting exceptions.

Recording of a subdivision plat shall not be required in case of the sale or exchange of parcels of land between owners of adjoining properties for the purpose of adjustments in boundaries, provided that additional lots are not thereby created, that the original lots are not reduced below the minimum size required by this article or the zoning ordinance, and there are no changes in easements or utility lines.

(Ord. No. 4225, art. 4, 5-16-11)

### Sec. 25-1213. Administration.

The city manager may adopt, amend and publish rules and instructions within the intent of this article for the administration of this article to the end that the public be informed and that approval of plats is expedited.

(Ord. No. 4225, art. 4, 5-16-11)

### Sec. 25-1214. Appeals.

Decisions of the city manager relating to any matter covered in these regulations may be appealed to the city council by written petition stating the basis for such appeal and the specific relief sought.

(Ord. No. 4225, art. 4, 5-16-11)

### Secs. 25-1215—25-1225. Reserved.

### Sec. 25-1226. Submission of preliminary plat.

If a project is going to be developed in multiple phases, the developer shall prepare and submit first to the commission and then to the city council such number of copies of a preliminary plat of the tract as shall be required by the development manual. Such preliminary plat shall be submitted after receipt of the commission's report on the sketch plan, if a sketch plan was submitted. The preliminary plat shall be prepared at any scale from one (1) inch equals twenty (20) feet through one (1) inch equals two hundred (200) feet, so long as the scale is in an increment of ten (10) feet and shall contain the information required by the development manual.

(Ord. No. 4225, art. 4, 5-16-11)

### Sec. 25-1227. Review of preliminary plat by commission.

The commission shall review the preliminary plat as soon as practicable, and:

(a) If the preliminary plat is satisfactory, the secretary of the commission shall forward it to the city council together with the recommendation of the commission for approval.

(b) If the preliminary plat is unsatisfactory, the commission shall give notice to the submitting party in writing, setting forth the conditions causing the disapproval, and the unsatisfactory conditions shall be remedied prior to further consideration by the commission.

(c) If the unsatisfactory conditions are not remedied within thirty (30) days of such notice, the secretary of the commission shall forward the preliminary plat to the city council together with the recommendation of the commission for:

  (1) Disapproval; or

  (2) Conditional approval based on correction of specific unsatisfactory conditions.

(d) If no recommendation from the commission is received by the city council within forty-five (45) days of date of submission of preliminary plat to the commission, and no adverse report has been given to the submitting party by the commission, it shall be assumed to have been approved, and the city council may proceed with their review of the preliminary plat in accordance with section 25-1228

(e) Whenever a preliminary plat includes a proposed establishment of common land, a trust indenture shall be recorded simultaneously with the record plat which shall provide for the proper and continuous maintenance and supervision of such common land by trustees to be selected and to act in accordance with the terms of such indenture and the common land shall be deeded to the trustees under such indenture by general warranty deed. Any alteration of the common land or improvement will require the submission of detailed improvement plans and will be considered a required improvement.

(Ord. No. 4225, art. 4, 5-16-11)

## Sec. 25-1228. Review of preliminary plat by council.

The city council shall review the preliminary plat as soon as practicable after receipt of the report of the commission, and:

(a) If the plat is satisfactory, the city clerk upon direction from the city council shall thereupon affix a notation of approval, date of approval, the signature of the city clerk and the seal of the city on the plat, denoting satisfactory compliance with the requirements of this article. The plat shall be returned to the developer who may then proceed in accordance with article XIII, site plans and improvements plans, of this chapter 25

(b) If the preliminary plat is unsatisfactory, the city council shall give notice to the submitting party in writing, setting forth the conditions causing the disapproval, and the unsatisfactory conditions shall be remedied prior to further consideration by the city council.

(c) The approval by the city council of the preliminary plat shall be valid for a period of two (2) years from the date of approval, or such longer period, up to a maximum of five (5) years, as the city council may determine to be advisable if after review by the city council such longer period is necessary to facilitate adequate and coordinated provisions for transportation, water, sewerage, schools, parks, playgrounds, or other public requirements. If no record plat of a subdivision of any part of the tract for which a preliminary plat has been approved is recorded within such two-year period, or such longer period as the city council shall permit, a resubmission and review thereof by the commission and the city council may be required.

(Ord. No. 4225, art. 4, 5-16-11)

## Sec. 25-1229. Sectionalizing.

After approval of the preliminary plat by the city council, the developer shall be permitted to divide the plat into two (2) or more sections in a manner to assure orderly development of the subdivision. In the event of such sectionalizing:

(a) The performance bond or escrow agreement shall be in such amount as is commensurate with the section or sections of the plat for which improvements will be installed or guaranteed and for which a separate record plat will be filed.

(b) Submission of bond or escrow agreement assuring improvements in the remaining sections may be deferred until such time as the developer proposes to submit a record plat of such deferred section or sections.

(c) Dedication of streets, easements and public improvements must be made in each section for which a record plat is submitted, but may be deferred in the remaining sections until such time as a record plat is submitted for any such deferred section or sections.

(d) A record plat may be submitted to the city council for each section for which improvements have been installed or guaranteed and if approved by the city council shall be filed with the county recorder of deeds.

(e) Each such section shall contain at least ten (10) percent of the total number of lots or at least eight (8) lots, whichever is greater in the approved preliminary plat, unless specifically authorized by the city manager.

(f) A record plat of the initial section must be submitted for approval within two (2) years of the date of approval of the preliminary plat, or resubmission and review of the preliminary plat by the commission and the city council may be required.

(g) If a record plat is approved for a section or sections of the approved preliminary plat within two (2) years of the date of approval of the preliminary plat, approval of the remaining sections of such preliminary plat shall be valid for a period of five (5) years from the date of approval of the preliminary plat by the city council.

(Ord. No. 4225, art. 4, 5-16-11)

## Sec. 25-1230. Submission of record plat.

The record plat, which shall be in reproducible form and accompanied by the appropriate fees, as outlined in the city's fee schedule, shall be submitted first to the commission for its recommendation and then to the city council for final approval. A copy of the final plat shall also be submitted to the city in digital exchange format. Upon approval of the record plat by the city council, the city clerk, at the council's direction, shall sign the plat with the date of such approval and shall affix the seal of the city. Approval of the record plat by the city council shall constitute approval of any variances from these regulations incorporated therein.

(Ord. No. 4225, art. 4, 5-16-11)

## Sec. 25-1231. Filing of record plat.

The record plat shall be filed with the county recorder of deeds after approval by the city council.

(Ord. No. 4225, art. 4, 5-16-11)

## Sec. 25-1232. Requirements of record plat.

The record plat shall be prepared by a registered land surveyor and at any scale from one (1) inch equals twenty (20) feet to one (1) inch equals one hundred (100) feet in any increment of ten (10) feet from an accurate survey on one (1) or more sheets whose maximum dimensions are twenty-four (24) inches by twenty-four (24) inches, or whatever the county recorder of deeds will accept. In certain unusual instances where the subdivided area is of unusual size or shape, the city manager may permit a variation in the scale or size of the record plat. If more than one (1) sheet is required, a key map on Sheet No. 1 showing the entire subdivision at reduced scale shall be provided. The record plat shall include the information required by the development manual.

(Ord. No. 4225, art. 4, 5-16-11)

### Sec. 25-1233. Subdivision review fees.

There shall be a subdivision review fee which covers the actual cost of the subdivision review, as established by the city's fee schedule.

(Ord. No. 4225, art. 4, 5-16-11)

### Secs. 25-1234—25-1249. Reserved.

### Sec. 25-1250. Single-family residential lot design standards.

The size, shape and orientation of lots shall be designed to provide desirable building sites logically related to topography, natural features, streets, and adjacent land uses. The following minimum standards are set forth as guides to these goals:

(a) Each proposed lot shall front on a street.

(b) Access to lots with double frontage shall be limited to one (1) street.

(c) The lot shall meet the requirements of the zoning ordinance.

(d) Minimum frontage widths shall be determined at the normal building line.

(e) The minimum width required for a lot fronting on a circular turnaround may be measured along a line parallel to the street right-of-way, at a distance from the street right-of-way line equal to the depth of the required front yard plus ten (10) feet.

(f) The minimum width at the right-of-way line for lots fronting on a circular turnaround shall be not less than thirty-six (36) feet.

(g) Side lot lines shall be at right angles to straight streets and radial to curved streets, except when such radial lot lines detract from the desirability of the lot.

(h) Corner lots for residential use shall have adequate width to permit appropriate building lines from both streets.

(Ord. No. 4225, art. 4, 5-16-11)

### Sec. 25-1251. Multifamily dwelling unit subdivision design standards.

(a) Buildings housing multifamily dwelling units need not front or abut directly on a street, providing that suitable access and easements are provided for both vehicular and pedestrian traffic.

(b) Buildings housing multifamily dwelling units should be located a minimum of thirty (30) feet from any other structure. Adequate emergency access shall be provided for each building.

(Ord. No. 4225, art. 4, 5-16-11)

### Sec. 25-1252. Cluster subdivisions.

(a) *Purpose.* Cluster subdivisions may be approved according to the provisions of this section to preserve environmentally sensitive areas and open space. The intent of this section is to authorize a developer to decrease lot sizes and leave the land in natural conservation areas, thereby lowering development costs and increasing the amenity of the project without increasing the density beyond

what would be permissible if the land were subdivided into the size of lots required by the underlying zoning district.

(b) *Applicability.* A developer may create a cluster subdivision in a standard residential zoning district which includes lots that are smaller and arranged differently than those required by the underlying zoning district regulations if the application conforms to this section.

(c) *Project size and density.* There is no minimum or maximum acreage limitation for a cluster subdivision. The maximum allowable residential density shall not exceed the maximum density allowed in the underlying zoning district, except as provided for in this section.

(d) *Lot dimensions and setback requirements.* There are no prescribed minimum lot dimensions. Lot widths and depths shall be sufficient to accommodate the use and minimum building setbacks required in the underlying zoning district.

(e) *Required open space.* The amount of open space which must be set aside in cluster subdivisions shall be based on the difference between the total area contained within all cluster lots and the total area which would have been contained within an equivalent number of standard lots based on the density allowed in the underlying zoning district.

(f) *Open space standards.* The developer shall provide for the ownership and continued maintenance of all open space by one (1) of the methods stated below. City approval of the form of dedication or conveyance shall be required.

(1) Offer to dedicate land for public use; or

(2) Convey open space to be held in common by an organization established by the applicant and approved by the city. The applicant shall submit covenants and restrictions regarding permanent maintenance of the open space, including provisions addressing: maintenance duties of the organization; the manner in which lot owners will be assessed by the organization; conditions of default; and the manner of enforcement by the city.

(g) *Open space allocation.* Open space shall be provided for each phase of a development. If common open space will not be provided proportionally by phase, the applicant shall execute a reservation of common open space by grant of an easement or covenant in favor of the city, authorizing the city to dedicate all or a portion of such reserved area to common open space in the event that the development is not completed.

(h) *Open space design and improvements.* Open space areas shall be linked to existing and planned public open space and trail systems wherever possible. Open space shall be arranged to maximize access and use by residents of the cluster subdivision. Where open space improvements are provided, a safe, secure and barrier-free system of trails, paths, walkways and bikeways shall be designed. Improvements may include paved pedestrian paths located in public rights-of-way or permanent access easements.

(i) *Increased density.* An increase in the maximum density allowed in the underlying zoning district may be approved for a cluster subdivision if one (1) or more of the following requirements are met:

(1) The preservation of a significant natural resource;

(2) The provision of more than twenty-five (25) percent of the subdivision as open space;

(3) The dedication to the city of public parkland that has been deemed to be desirable by the city.

The increase in density shall generally be related to the significance and/or size of the open space, natural resource or parkland associated with the cluster subdivision.

(Ord. No. 4225, art. 4, 5-16-11)

ARTICLE XII. SUBDIVISIONS

**Secs. 25-1253—25-1299. Reserved.**

## ARTICLE XIII. SITE PLANS AND IMPROVEMENT PLANS

Sec. 25-1300. General.

Sec. 25-1301. Applicability.

Sec. 25-1302. Site plans.

Sec. 25-1303. Improvement plans.

Sec. 25-1304. Inspection fees.

Sec. 25-1305. As-built drawings of improvements.

Sec. 25-1306. Performance and maintenance bond.

Sec. 25-1307. Acceptance and final approval.

Sec. 25-1308. Improvements to be installed or guaranteed.

Sec. 25-1309. Bond.

Sec. 25-1310. Escrow agreement.

Sec. 25-1311. Term of bond or escrowed sum.

Sec. 25-1312. Extensions, termination of bond or escrow agreement.

Sec. 25-1313. Approval of escrow agents and sureties.

### Sec. 25-1300. General.

(a) *Development* means any manmade change in improved and unimproved real estate, including, but not limited to, buildings or other structures, mining, dredging, filling, grading, paving, diking, berming, excavation, drilling operations, or storage of equipment or materials.

(b) *Site plan* intended to provide an overview of the applicant's proposed land development. The site plan will be used to determine if the proposed development is in compliance with the city's current ordinances and regulations, as well as any other applicable state or federal requirements. The site plan shall include the location of all proposed structures, the location and availability of public infrastructure, such as streets, water lines, and sewer lines and information regarding compliance with zoning ordinance and development code requirements.

(c) *Improvement plan* provides details regarding public infrastructure improvements required for a proposed development. These improvements may include, but are not limited to, water mains, sanitary sewer mains, and public streets.

(Ord. No. 4225, art. 5, 5-16-11)

### Sec. 25-1301. Applicability.

A site plan shall be submitted prior to the development of property in the city. The site plan shall be drawn to scale and include information regarding the development as may be required by the city manager. If a proposed development includes any public infrastructure, such as streets, water or sewer mains, improvement plans shall be submitted prior to the development of the property.

(Ord. No. 4225, art. 5, 5-16-11)

ARTICLE XIII. SITE PLANS AND IMPROVEMENT PLANS

## Sec. 25-1302. Site plans.

(a) *Submission of site plans.* Site plans for the development of a property shall be submitted for review to the city manager and shall contain the information required by the development manual.

(b) *Review of site plans.* The procedure for reviewing site plans shall be as follows:

(1) The plans shall be reviewed by the city manager. Corrections or additions shall be made, if needed, and when the plans are satisfactory, approval shall be given by the city manager.

(2) Complete approval of the plans and payment of fees as outlined in the fee schedule constitute authority to start construction.

(c) *Approval of site plans.* Approval by the city manager of a site plan shall be valid for a period of two (2) years from the date of such approval, or for such longer period, up to a maximum of five (5) years, as the city manager may determine to be advisable if after review by the city manager such longer period is necessary.

(Ord. No. 4225, art. 5, 5-16-11)

## Sec. 25-1303. Improvement plans.

(a) *Submission of improvement plans.* Improvement plans for the construction of any public infrastructure necessary for a development shall be submitted for review to the city manager and shall contain the information required by the development manual.

(b) *Review of improvement plans.* The procedure for reviewing improvement plans shall be as follows:

(1) The plans shall be reviewed by the city manager. Corrections or additions shall be made, if needed, and when the plans are satisfactory, approval shall be given by the city manager.

(2) Complete approval of the plans and payment of fees as outlined in the fee schedule constitute authority to start construction or to post bond or escrow to cover the cost of improvements.

(c) *Approval of improvement plans.* In the design of any public infrastructure, the design standards of the city's standard specifications shall be followed and the plans shall be prepared by a professional engineer registered in the State of Missouri. Plans for new public improvements such as, but not limited to, water or sanitary sewer systems, shall show the size, number and location of all new connections and shall comply with all the provisions of the City Code. Approval by the city manager of the improvement plans shall be valid for a period of two (2) years from the date of such approval, or for such longer period, up to a maximum of five (5) years, as the city manager may determine to be advisable if after review by the city manager such longer period is necessary to facilitate adequate and coordinated provisions for transportation, water, sewerage, or other public infrastructure. If the construction of the improvements have not been completed within the two-year period or such longer period as the city manager may permit, a resubmission and review of the improvement plans by the city manager may be required.

(Ord. No. 4225, art. 5, 5-16-11)

## Sec. 25-1304. Inspection fees.

The city shall also collect inspection fees as established by the fee schedule, based upon the city manager's estimate of time required to inspect any necessary public improvements. The city shall be entitled to full compensation for the time consumed in making such inspections. If the estimated fee is inadequate, the necessary additional fees shall be collected by the city after the inspections are completed; and if the estimated fee is in excess of the amount actually expended, the balance shall be

refunded by the city. Claims for such refunds shall be made to the city in writing and shall be paid when audited and approved by the city manager.

(Ord. No. 4225, art. 5, 5-16-11)

### Sec. 25-1305. As-built drawings of improvements.

After the improvements have been constructed and installed, but before the city manager recommends final approval or acceptance, the developer shall submit the required number of as-built drawings of such improvements. A copy of the final as-built drawing shall also be submitted to the city in digital exchange format.

(Ord. No. 4225, art. 5, 5-16-11)

### Sec. 25-1306. Performance and maintenance bond.

A bond as described in this city ordinance shall be required before any work is performed as defined in improvement plans of this article. Except as may be otherwise required by law, the developer shall at all times during the term of construction and through acceptance and final approval by city council, and for four (4) years thereafter, maintain a performance and maintenance bond in a form approved by the city attorney. The amount of the bond will be the value of the development as determined by the city manager for a term consistent with the length of construction and through acceptance and final approval by city council plus four (4) additional years, conditioned upon this developer's faithful performance of the provisions, terms and conditions conferred by this city ordinance. The city shall be entitled to recover under the terms of such bond the full amount of any loss and damage occasioned from violation of any work performed not approved by the city manager or his designee. Any person performing work in improvement plans of this article shall guarantee such work for a period of four (4) years.

(Ord. No. 4225, art. 5, 5-16-11)

### Sec. 25-1307. Acceptance and final approval.

Before the developer's obligation to the city is terminated, all required improvements shall be constructed under the observation and inspection of the city manager. The city council shall accept the improvements for city maintenance.

(Ord. No. 4225, art. 5, 5-16-11)

### Sec. 25-1308. Improvements to be installed or guaranteed.

After the improvement plans have been approved and all inspection fees paid, but before approval of the record plat and before any lots are sold, the developer shall either:

(a) Complete the improvements in accordance with the approved improvement plans under the observation and inspection of the city manager; or

(b) Post a bond or enter into an escrow agreement in accordance with the provisions hereafter set forth. The bond or escrow agreement shall be prepared and executed on forms furnished by the city and shall be submitted to the city council for approval or disapproval. Such forms shall be reviewed by the city manager prior to being sent to the city council.

(Ord. No. 4225, art. 5, 5-16-11)

### Sec. 25-1309. Bond.

A bond shall be valid only if issued by a surety company or title insurance company and shall insure or guarantee, to the extent of the amount specified by the city manager in his estimate of the cost thereof, the construction and completion of the improvements shown by the approved improvement plans.

(Ord. No. 4225, art. 5, 5-16-11)

### Sec. 25-1310. Escrow agreement.

An escrow agreement shall provide that there shall be deposited with the escrow agent to be held in a special escrow account by the escrow agent, subject to audit by the city:

(a) A cash amount which shall be not less than the amount specified by the city manager in his estimate of the cost of the improvements as reflected by the approved improvement plans; or

(b) An irrevocable letter of credit or commitment from a lending institution approved by the city council to the escrow agent guaranteeing to such escrow agent the availability, from time to time upon demand, of a sum which shall be not less than the amount specified by the city manager in his estimate of the cost of the improvements as reflected by the approved improvement plans; or

(c) Certificates of deposit, treasury bills or other readily negotiable instruments, the type of which has been approved by the city council, endorsed to the escrow agent and the cash value of which shall be in an amount not less than the amount specified by the city manager in his estimate of the cost of the improvements as reflected by the approved improvement plans.

The escrow agent may be an officer or employee of a lending institution issuing the commitment referred to in subsection (b) above, providing adequate provision is made to assure his legal obligation to the city.

(Ord. No. 4225, art. 5, 5-16-11)

### Sec. 25-1311. Term of bond or escrowed sum.

The bond shall remain in effect or the escrowed sum shall be held in the escrow account by the escrow agent, as the case may be, until such time as the city council shall, by written authorization to the surety or escrow agent, release the surety from the obligation of the bond or the escrow agent from his obligation to retain the escrowed sum in the escrow account, which release may be partial and may occur from time to time, as improvements are completed and approved; provided, however:

(a) The city council shall release the surety or escrow agent from all or any part of its obligation only upon receipt of the requisite written notification from the city manager; and

(b) In no case shall the city council authorize the release of more than ninety-five (95) percent of the amount held as the bond or escrow sum until such improvements have been completed in a satisfactory manner, approved by the city manager and accepted or approved by the city council.

(Ord. No. 4225, art. 5, 5-16-11)

### Sec. 25-1312. Extensions, termination of bond or escrow agreement.

The term of the bond or the escrow agreement shall not exceed two (2) years in duration subject to the following:

(a) If, at the end of the two-year period, all the improvements reflected by the approved improvement plans have not been completed, the city council may grant an extension of the term of the bond or the escrow agreement for a period not to exceed one (1) additional year at each extension if after review by the city council such longer period is deemed to be in the public interest. If such improvements have not been completed at the end of the two-year period or the extended period authorized by the city council, the city council may:

(1) Require the surety to perform on the bond and pay to the city such amount as shall be equal to the lesser of the amount required to complete the improvements or the amount of the bond not theretofore released; or

(2) Require the escrow agent or remit to the city in cash or negotiable instruments constituting the escrow sum, as the case may be, the balance in the escrow account required to complete the improvements and the balance, if any, in the escrow account which exceeds such amount shall be returned to the developer; or

(3) Require the developer to submit a new bond or escrow agreement which has been recalculated in order to allow for any inflation in the cost of constructing the approved improvements.

(b) If the surety fails to perform on the bond or the escrow agent fails to remit the amount required within thirty (30) days after written request, the city attorney is authorized to take immediate action to require performance by the surety under the bond or to secure the payment by the escrow agent of the amount required.

(Ord. No. 4225, art. 5, 5-16-11)

## Sec. 25-1313. Approval of escrow agents and sureties.

To be eligible all escrow agents and sureties shall be approved by the city council. All escrow agents and sureties shall be subject to spot audits by the city. If the escrow agent or surety fails to comply with any of the provisions of the escrow agreement or the bond, the escrow agent or surety shall not thereafter be allowed to act as escrow agent or surety for any improvement in the city or the area for a period of two (2) years.

(Ord. No. 4225, art. 5, 5-16-11)

ARTICLE XIII. SITE PLANS AND IMPROVEMENT PLANS

# Chapter 28 URBAN REDEVELOPMENT [1]

Sec. 28-1. Title and designation.

Sec. 28-2. Definitions.

Sec. 28-3. State enabling act.

Sec. 28-4. Declaration of policy.

Sec. 28-5. Submission of proposed development plans.

Sec. 28-6. Council hearing and notice regarding development plan.

Sec. 28-7. Council hearing and determination.

Sec. 28-8. Council findings.

Sec. 28-9. Amendment of plan.

Sec. 28-10. Notice to taxing districts.

Sec. 28-11. Environmental impact reports.

Sec. 28-12. Fees.

Sec. 28-13. Grants, loans from the United States government.

## Sec. 28-1. Title and designation.

This chapter shall be known and may be cited and referred to as "The Urban Redevelopment Ordinance."

(Ord. No. 4167, art. 1, 11-1-10)

## Sec. 28-2. Definitions.

The following terms, whenever used or referred to in this chapter, shall, unless a different intent clearly appears from the context, be construed to have the following meanings:

*Area* means that portion of the city which the city council shall find to be blighted, so that the clearance, replanning, rehabilitation or reconstruction thereof is necessary to effectuate the purposes of this chapter. Any such area may include buildings or improvements not in themselves blighted, and any real property, whether improved or unimproved, the inclusion of which is deemed necessary for the effective clearance, replanning, reconstruction or rehabilitation of the area of which such buildings, improvements or real property form a part.

*Blighted area* means those portions of the city which the council shall determine, that by reason of age, obsolescence, inadequate or outmoded design or physical deterioration, have become economic and social liabilities and that the conditions in such localities are conducive to ill health, transmission of disease, crime or inability to pay reasonable taxes.

*Corporation* means any urban redevelopment corporation organized under and pursuant to the provisions of the Urban Redevelopment Corporations Law, and shall include any life insurance company organized under the laws of, or admitted to do business in the state, which shall undertake a redevelopment project under the provisions of this chapter.

*Person* means any individual, firm, partnership, joint adventure, association, corporation (except an urban redevelopment corporation organized pursuant to the provisions of the Urban Redevelopment Corporations Law, and any life insurance company, organized under the laws of, or admitted to do business in the state, undertaking a redevelopment project under this chapter), whether organized for profit or not, estate, trust, business trust, receiver or trustee appointed by any state or federal court, syndicate, or any other group or combination acting as a unit, and shall include the male as well as the female gender and the plural as well as the singular number.

*Real property* means and includes lands, buildings, improvements, land under water, waterfront property and any and all easements, franchises and hereditaments, corporeal or incorporeal, and every estate, interest, privilege, easement, franchise and right therein, or appurtenant thereto, legal or equitable, including restrictions of record, created by plat, covenant, or otherwise, rights-of-way, and terms for years.

*Redevelopment* means the clearance, replanning, reconstruction or rehabilitation of any blighted area, and the provision for such industrial, commercial, residential or public structures and spaces as may be appropriate, including recreational and other facilities incident or appurtenant thereto.

*Urban Redevelopment Corporations Law* means RSMo ch. 353, as amended.

(Ord. No. 4167, art. 1, 11-1-10)

## Sec. 28-3. State enabling act.

The provisions of the Urban Redevelopment Corporations Law shall apply to all persons and corporations operating under this chapter insofar as the same may be applicable thereto.

(Ord. No. 4167, art. 1, 11-1-10)

## Sec. 28-4. Declaration of policy.

It is hereby determined and declared that certain areas of the city are blighted in that such areas are characterized by physical deterioration, age and obsolescence, inadequate or outmoded design, under-utilization of land and improvements and inadequate utilities and open space. Such areas are economic and social liabilities which are conducive to ill health, disease and crime, and do not produce reasonable taxes. In order to eliminate the blight that characterizes these areas of the city, it is necessary that redevelopment of these areas including clearance, replanning, rehabilitation or reconstruction be undertaken. Such redevelopment would not be likely to occur without the tax and land assemblage incentives to redevelopment provided by the Urban Redevelopment Corporations Law and this chapter.

(Ord. No. 4167, art. 1, 11-1-10)

## Sec. 28-5. Submission of proposed development plans.

(a) Any corporation may submit a proposed development plan to the city at any time. Such submission shall include the fee required by section 28-12 and ten (10) copies of the proposed development plan.

(b) The development plan shall contain:

(1) *Legal description.* A legal description of the development area by metes and bounds.

(2) *Stages of project.* A statement of the various stages, if more than one (1) is intended, by which the development is proposed to be constructed or undertaken, and the approximate time limit for the completion of each stage, together with a legal description of the real property to be

included in each stage. This statement shall also show a time schedule clearly setting forth reasonable times for start and completion of:

a. Acquisition of properties,

b. Demolition of buildings,

c. Construction of new improvements.

(3) *Property to be demolished.* A statement of the existing buildings or improvements in the redevelopment area to be demolished immediately, if any.

(4) *Property not to be demolished.* A statement of existing buildings or improvements in the development area not to be demolished immediately, if any, and the approximate period of time during which the demolition, if any, of each such building or improvement is to take place.

(5) *Building renovation.* A statement of the proposed improvements, if any, to each building not to be demolished immediately, any proposed repairs or alterations to such buildings, and the approximate period of time during which such improvements, repairs or alterations are to be made.

(6) *New construction.* A statement of the type, number and character of each new industrial, commercial, residential or other building or improvement to be erected or made.

(7) *Open space.* A statement of those portions, if any, of the blighted area which may be permitted or will be required to be left as open space, the use to which each such open space is to be put, the period of time each such open space will be required to remain an open space and the manner in which it will be improved and maintained, if at all.

(8) *Property for public agencies.* A statement of those portions, if any, of the redevelopment area which are proposed to be sold, donated, exchanged or leased to the board of education, public library board, or other public agency, and an outline of the terms of such proposed sale, donation, exchange or lease.

(9) *Zoning changes.* A statement of the proposed changes, if any, in zoning ordinances or maps, necessary or desirable for the redevelopment, and its protection against blighted influences.

(10) *Subdivisions.* A statement of the proposed subdivisions or resubdivisions necessary for the redevelopment plan.

(11) *Street changes.* A statement of the proposed changes, if any, in streets or street levels, all proposed street closings, and all changes which would have to be made to streets adjoining or near the redevelopment project including a plan for financing these changes.

(12) *Dwelling accommodations.* A statement of the character of the existing dwelling accommodations, if any, in the blighted area, the approximate number of families residing therein, together with a schedule of the rentals being paid by them, and a schedule of the vacancies in such accommodations, if any, together with the rentals demanded therefor, and a schedule of the owner-occupied buildings.

(13) *Housing and business relocation.* A statement of the housing accommodations available in other locations in the city for those persons who will be displaced by the redevelopment project. The development plan shall set forth a feasible plan for the relocation of all residents and businesses displaced, including adequate reimbursements for reasonable relocation costs.

(14) *Proposed housing.* A statement of the character, type and quality of construction, approximate number of units, approximate rentals and approximate date of availability of the proposed dwelling accommodations, if any, to be furnished during construction and upon completion of the redevelopment.

(15) *Changes outside of redevelopment project area.* A statement of any projects or relocations outside of the area of the redevelopment project which would be initiated due to the redevelopment project.

(16) *Financing.* A detailed statement of the proposed method of financing the redevelopment; including, but not limited to, evidence satisfactory to the city council that sufficient funds or securities are available and will be used for normal financing of the entire development proposed and will remain available until the particular development is started, and evidence satisfactory to the city council that the amount necessary to acquire and clear the land involved is available from such equity and/or other funds.

(17) *Management.* A statement of the persons who it is proposed will be active in or associated with the management of the redevelopment project during a period of at least one (1) year from the date of the approval of the development plan.

(18) *Eminent domain.* A statement giving the legal description of the real property owned, or proposed to be purchased or to be acquired by eminent domain, and the reasons why acquisition by condemnation is proposed.

(19) *Other information.* The development plan, and all applications to the city council for approval thereof, may also contain such other statements or exhibits as may be deemed relevant by the city council or the proponents, including, but not limited to, blight studies, feasibility studies, market studies and architectural renderings or models.

(Ord. No. 4167, art. 1, 11-1-10)

## Sec. 28-6. Council hearing and notice regarding development plan.

After receipt of a development plan, the city council shall set a date for a public hearing on the plan within a reasonable time. At least ten (10) days prior to the hearing date, the corporation whose development plan is before the council shall provide notice of the hearing by first class mail to each record owner of real property within the area to which the development plan pertains. The corporation shall also publish the notice in a newspaper doing business in the city at least ten (10) days prior to the hearing date.

(Ord. No. 4167, art. 1, 11-1-10)

## Sec. 28-7. Council hearing and determination.

(a) At the public hearing any interested person and the applicant corporation may be heard. After the public hearing the council may:

(1) Unconditionally approve the plan and authorize the mayor on behalf of the city to enter into a redevelopment agreement with the corporation.

(2) Approve the plan subject to conditions or restrictions, and authorize the mayor on behalf of the city to enter into a redevelopment agreement with the corporation.

(3) Require the corporation to make changes in the plan for resubmission to the council.

(4) Disapprove the plan.

(b) If the plan is approved, the council may adopt the plan by ordinance which may also incorporate the redevelopment agreement between the city and the corporation regarding the implementation of the plan.

(Ord. No. 4167, art. 1, 11-1-10)

## Sec. 28-8. Council findings.

The city council may approve a plan only if it finds, as a minimum, that:

(a) The redevelopment called for in the development plan is necessary or advisable to effectuate the purposes of this chapter.

(b) The development plan is consistent with the master plan and/or comprehensive plan of the city.

(c) There are or will soon be housing accommodations elsewhere available for all persons who will be displaced by the redevelopment project, and that no undue hardship to such persons will be caused thereby.

(d) That public facilities, including, but not limited to, school, fire, water, sewer and police services, as well as transportation, parks, playgrounds and recreation facilities are adequate or will be adequate to service the area at the time that the redevelopment is ready for use.

(e) That the proposed changes, if any, in the zoning ordinances or maps, in streets and street levels, and that the proposed street closings or subdivisions are necessary or desirable for the redevelopment and its protection against blighting influences, and for the city as a whole.

(Ord. No. 4167, art. 1, 11-1-10)

## Sec. 28-9. Amendment of plan.

If the city council approves a development plan, that plan shall not thereafter be amended without the consent of the corporation which proposed the approved plan.

(Ord. No. 4167, art. 1, 11-1-10)

## Sec. 28-10. Notice to taxing districts.

If the development plan provides for tax abatement authorized by the Urban Redevelopment Corporations Law, the corporation, on behalf of the city, shall furnish each taxing district whose boundaries for ad valorem taxation purposes include any portion of the real property to be affected by such tax abatement with a written statement of the impact on ad valorem taxes such tax abatement will have on such taxing district and written notice of the hearing to be held regarding the development plan. The written statement and notice required by this paragraph shall be mailed to each taxing district by registered or certified mail, postage prepaid, return receipt requested, at least ten (10) days prior to the hearing and shall include, but need not be limited to, an estimate of the amount of ad valorem tax revenues for each taxing district that which will be affected by the proposed tax abatement based upon the estimated assessed valuation of the real property involved as such property would exist before and after it is developed. At the public hearing, all taxing districts so notified shall have the right to be heard on such grant of tax abatement.

(Ord. No. 4167, art. 1, 11-1-10)

## Sec. 28-11. Environmental impact reports.

If, under any state or federal law, it is necessary to prepare an environmental impact report or statement in connection with a development plan or any development carried out pursuant to such a plan, the corporation proposing the plan or development shall prepare such necessary environmental impact report or statement.

(Ord. No. 4167, art. 1, 11-1-10)

### Sec. 28-12. Fees.

A corporation which applies for approval of a development plan may be charged a reasonable fee for consideration of the development plan, which fee shall not exceed five hundred dollars ($500.00).

(Ord. No. 4167, art. 1, 11-1-10)

### Sec. 28-13. Grants, loans from the United States government.

The city or any person or corporation may accept grants or loans of money from the government of the United States or any department or agency thereof, to effectuate the purposes of this chapter. The city may cooperate with any corporation whose development plan has been approved in applying for and obtaining any grants or loans which further the objectives and implementation of the plan.

(Ord. No. 4167, art. 1, 11-1-10)

---

FOOTNOTE(S):

---

--- (**1**) ---

**Editor's note—** Article 1 of Ord. No. 4167, adopted Nov. 1, 2010, repealed ch. 28, which was comprised of §§ 28-1—28-28, and enacted similar provisions to read as herein set out. Former ch. 28 derived from ch. 27A of the 1967 Code. (Back)

**Cross reference—** Administration, ch. 2; buildings, ch. 7; health and sanitation, ch. 13; housing, ch. 14; stormwater management regulations, ch. 23; streets and sidewalks, ch. 24; subdivision regulations, ch. 25; water and sewers, ch. 29; zoning, ch. 30; housing authority, § 2-116 et seq.; redevelopment corporation banners, § 24-20. (Back)

**State Law reference—** Land clearance for redevelopment, RSMo, § 99.300 et seq. (Back)

# Chapter 29 WATER AND SEWERS [1]

ARTICLE I. - SANITARY SEWER

ARTICLE II. - WATER DIVISION

---

FOOTNOTE(S):

---

--- (**1**) ---

**Editor's note—** Article 1 of Ord. No. 4255, adopted Aug. 15, 2011, repealed ch. 29 in its entirety and enacted similar provisions to read as herein set out. Former ch. 29 was comprised of §§ 29-1—29-354, and derived from ch. 29 of the 1967 Code. The subsequent amendatory history can be found in the Code Comparative Table located at the back of this volume. (Back)

**Cross reference—** Administration, ch. 2; buildings, ch. 7; health and sanitation, ch. 13; housing, ch. 14; public improvement and special assessments, ch. 21; solid waste and weeds, ch. 22; stormwater management regulations, ch. 23; streets and sidewalks, ch. 24; subdivision regulations, ch. 25; travel trailer camps, mobile homes and mobile home parks, ch. 27; urban redevelopment, ch. 28; public works department, § 2-54; plumbing code, § 7-51 et seq.; sewer and water supply data under plumbing code, § 7-57; city water to be fluoridated, § 13-3; prevention of water on sidewalks, § 24-14; water and sewers in subdivisions, § 25-89 et seq.; water and sewers in travel trailer camps and mobile home parks, § 27-33 et seq. (Back)

**State Law reference—** Utilities, RSMo, §§ 71.520 et seq., 91.010 et seq. (Back)

## ARTICLE I. SANITARY SEWER

DIVISION 1. - GENERALLY

DIVISION 2. - PRIVATE SERVICE LINES AND CONNECTIONS

DIVISION 3. - USE OF PUBLIC SEWERS

DIVISION 4. - ACCOUNTS AND BILLING

DIVISION 5. - PRIVATE SEWAGE DISPOSAL

## *DIVISION 1. GENERALLY*

Sec. 29-1. Definitions.

Sec. 29-2. Abbreviations.

Sec. 29-3. General provisions.

Sec. 29-4. General sewer use requirements.

Sec. 29-5. Fat, oil, and grease control.

Sec. 29-6. Pretreatment of wastewater.

Sec. 29-7. Industrial pretreatment user permit eligibility.

Sec. 29-8. Industrial pretreatment user permit issuance process.

Sec. 29-9. Reporting requirements.

Sec. 29-10. Compliance monitoring.

Sec. 29-11. Confidential information.

Sec. 29-12. Publication of industrial users in significant noncompliance.

Sec. 29-13. Administrative enforcement remedies.

Sec. 29-14. Judicial enforcement; remedies.

Sec. 29-15. Supplemental enforcement action.

Sec. 29-16. Affirmative defenses to discharge violations.

Sec. 29-17. Miscellaneous provisions.

### Sec. 29-1. Definitions.

Unless the context specifically indicates otherwise, the meaning of the terms used in this article shall be as follows:

*Act* or *the Act.* The Federal Water Pollution Control Act, also known as the Clean Water Act, as amended, 33 U.S.C. 1251 et seq.

*Action level.* The concentration based numeric value that the grease interceptor effluent, at the device's outlet tee and prior to mixing with any other waste water from the contributing establishment's property, are expected to achieve on a consistent or stipulated basis.

*Approval authority.* The State of Missouri Department of Natural Resources.

*Approved.* Approved by the city manager and "approval" shall mean the city manager's approval.

*BOD (denoting biochemical oxygen demand).* The quantity of oxygen utilized in the biochemical oxidation of organic matter under standard laboratory procedure for five (5) days at twenty (20) degrees Celsius, expressed in milligrams per liter or parts per million by weight.

*Building drain.* That part of the lowest horizontal piping of a drainage system which receives the discharge from soil, waste, and other drainage pipes inside the walls of the building and conveys it to the building sewer, beginning five (5) feet outside the inner face of the building wall.

DIVISION 1. GENERALLY

*Building sewer.* The extension from the building drain to the public sewer or other place of disposal.

*Bypass.* The intentional diversion of wastewaters from any portion of an industrial user's treatment facility.

*COD (chemical oxygen demand).* The quantity of oxygen equivalent of organic matter that is susceptible to oxidation by a strong chemical oxidant under standard laboratory conditions, expressed in milligrams per liter.

*Capital charge.* That portion of the total sewer service charge which is levied for local capital costs, local investment in plant facilities and other local costs excluding operation, maintenance and replacement costs.

*Categorical user.* Those industrial users subject to National Categorical Pretreatment Standards promulgated by the U.S. Environmental Protection agency under the Federal Water Pollution Control Act, P.L. 92-500, as amended. All such categorical users shall be considered significant industrial users under this chapter.

*City.* The City of Cape Girardeau or the city council of Cape Girardeau.

*City Fee Schedule.* The City Fee Schedule is established pursuant to the provisions of Section 25-114 of the City Code.

*City manager.* The city manager of the city, or his authorized deputy, agent or representative.

*Color.* The optical density at the visual wavelength of the maximum absorption, relative to distilled water. One hundred (100) percent transmittance is equivalent to zero (0.0) optical density.

*Combined sewer.* A sewer receiving both surface runoff and sewage.

*Common interceptor.* One (1) or more interceptors receiving FOG laden wastewater from more than one (1) establishment. Common interceptors may be located at shopping centers, malls, entertainment complexes, sporting arenas, hotels, multi-tenant "flex" spaces, mixed use spaces, and other sites where multiple establishments are connected to a single grease interceptor. The owner of the property on which the common grease interceptor is located shall be primarily responsible for the maintenance, upkeep, and repair of the common interceptor.

*Composite sample.* The sample resulting from combination of individual wastewater samples taken at selected intervals based on an increment of either flow or time.

*Environmental Protection Agency* or *EPA.* The U.S. Environmental Protection Agency or where appropriate, the term may also be used as a designation for the regional water management division director or other duly authorized official of said agency.

*Existing source.* Any source of discharge, the construction or operation of which commenced prior to the publication of proposed categorical pretreatment standards which will be applicable to such source if the standard is thereafter promulgated in accordance with Section 307 of the Act.

*Fats, oils, and greases.* Organic polar compounds derived from animal and/or plant sources that contain multiple carbon chain triglyceride molecules. These substances are detectable and measurable using analytical test procedures established in 40 CFR 136, as may be amended from time to time. All are sometimes referred to herein as "grease" or "greases" or "FOG".

*Food service establishments* or *"FSE".* Those establishments engaged in activities of preparing, serving, or otherwise making available for consumption foodstuffs and that use one (1) or more of the following preparation activities: Cooking by frying (all methods), baking (all methods), grilling, sauteing, rotisserie cooking, broiling (all methods), boiling, blanching, roasting, toasting, or poaching, and infrared

heating, searing, barbecuing, and any other food preparation or serving activity that produces a consumable food product in or on a receptacle requiring washing to be reused.

*Garbage.* Solid wastes from domestic and commercial preparation, cooking and dispensing of food, and from the handling, storage and sale of produce.

*Grab sample.* A sample which is taken from a wastewater stream on a one-time basis without regard to the flow in the wastewater stream and without consideration of time.

*Grease trap or interceptor.* A device for separating waterborne greases and grease complexes from wastewater and retaining such greases and grease complexes prior to the wastewater existing the trap and entering the sanitary sewer collection and treatment system. Grease traps also serve to collect solids that settle, generated by and from activities that subject users to this section, prior to the water exiting the trap and entering the sanitary sewer collection and treatment system. Grease traps and interceptors are sometimes referred to herein as "grease interceptors".

*Indirect discharge* or *discharge.* The introduction of (nondomestic) pollutants into the POTW from any nondomestic source regulated under Section 307(b), (c) or (d) of the Act.

*Industrial user.* A source of discharge of pollutants into a POTW from any nondomestic source regulated under Section 307(b), (c), or (d) of the Clean Water Act.

*Industrial wastes.* Any wastes from industrial manufacturing processes, trade or business as distinct from sanitary sewage.

*Instantaneous maximum allowable discharge limit.* The maximum concentration (or loading) of a pollutant allowed to be discharged at any time, determined from the analysis of any discrete or composited sample collected, independent of the industrial flow rate and the duration of the sampling event.

*Interference.* A discharge which alone or in conjunction with a discharge from other sources: (1) inhibits or disrupts the POTW, its treatment processes or operations or its biomass processes, used or disposal; and (2) therefore is a cause of a violation of the city's NPDES permit or of the prevention of biomass use or disposal in compliance with any of the following statutory/regulatory provisions or permits issued thereunder (or more stringent state or local regulations): Section 405 of Act; the Solid Waste Disposal Act (SWDA), including Title II commonly referred to as the Resource Conservation and Recovery Act (RCRA); any State regulations contained in any State Biomass Management Plan prepared pursuant to Subtitle D of the SWDA; the Clean Air Act; the Toxic Substances Control Act; and the Marine Protection, Research and Sanctuaries Act.

*Medical waste.* Isolation wastes, infectious agents, human blood and blood byproducts, pathological wastes, sharps, body parts, fomites, etiologic agents, contaminated bedding, surgical wastes, potentially contaminated laboratory wastes and dialysis wastes.

*Minimum design capability.* The design features of a grease interceptor and its ability or volume required to effectively intercept and retain greases and settled solids from grease-laden wastewaters discharged to the public sanitary sewer.

*NPDES.* National Pollutant Discharge Elimination System.

*Natural outlet.* Any outlet into a watercourse, pond, ditch, lake or other body of surface or groundwater.

*New source.*

(1) Any building, structure, facility or installation from which there is or may be a discharge of pollutants, the construction of which commenced after publication of proposed pretreatment

standards under Section 307(c) of the Act which will be applicable to such source if such standards are thereafter promulgated in accordance with that section, provided that:

a. The building, structure, facility or installation is constructed at a site at which no other source is located; or

b. The building, structure, facility or installation totally replaces the process or production equipment that causes the discharge of pollutants at an existing source; or

c. The production or wastewater generating processes of the building, structure, facility or installation are substantially independent of an existing source at the same site. In determining whether these are substantially independent, factors such as the extent to which the new facility is integrated with the existing plant, and the extent to which the new facility is engaged in the same general type of activity as the existing source, should be considered.

(2) Construction on a site at which an existing source is located results in a modification rather than a new source if the construction does not create a new building, structure, facility or installation meeting the criteria of subsection (1)b. or c., above, but otherwise alters, replaces, or adds to existing process or production equipment.

(3) Construction of new source as defined under this paragraph has commenced if the owner or operator has:

a. Begun, or caused to begin as part of a continuous onsite construction program:

1. Any placement, assembly, or installation of facilities or equipment; or

2. Significant site preparation work including clearing, excavation, or removal of existing buildings, structures, or facilities which is necessary for the placement, assembly, or installation of new source facilities or equipment; or

b. Entered into a binding contractual obligation for the purchase of facilities or equipment which are intended to be used in its operation within a reasonable time. Options to purchase or contracts which can be terminated or modified without substantial loss, and contracts for feasibility, engineering, and design studies do not constitute a contractual obligation under this paragraph.

*Noncontact cooling water.* Water used for cooling which does not come into direct contact with any raw material intermediate product, waste product, or finished product.

*Noncooking establishments.* Establishments primarily engaged in the preparation of precooked foodstuffs that do not include any form of cooking, but that may produce a consumable food product in or on a receptacle requiring washing to be reused.

*On-site grease interceptor treatment (sometimes "onsite treatment").* Mechanisms or procedures utilized by a user to treat grease interceptor contents on the user's site, followed by the reintroduction of such treated wastewater back into the interceptor. On-site grease interceptor treatment may only be accomplished by a user if the user or the user's contract service provider is permitted by the City of Cape Girardeau.

*Pass through.* A discharge which exits the POTW into waters of the U.S. in quantities or concentrations which, alone or in conjunction with a discharge or discharges from other sources, is a cause of a violation of any requirement of the city's NPDES permit (including an increase in the magnitude or duration of a violation).

*pH.* The intensity of the acid or base condition of a solution, calculated by taking the logarithm of the reciprocal of the hydrogen ion concentration expressed in moles per liter of solutions.

DIVISION 1. GENERALLY

*Person.* Any individual, partnership, copartnership, firm, company, corporation, association, joint stock company, trust, estate, governmental entity or any other legal entity, or their legal representatives, agents or assigns. This definition includes all federal, state or local governmental entities.

*Pollutant.* Any dredged spoil, solid waste, incinerator residue, sewage, garbage, biomass, munitions, medical wastes, chemical wastes, industrial wastes, biological materials, radioactive materials, heat, wrecked or discharged equipment, rock, sand, cellar dirt, agricultural wastes, and the characteristics of the wastewater (i.e., pH, temperature, TSS, turbidity, color, BOD, chemical oxygen demand (COD), toxicity, odor).

*Pretreatment.* The reduction of the amount of pollutants, the elimination of pollutants, or the alteration of the nature of pollutant properties in wastewater prior to or in lieu of introducing such pollutants into the POTW. This reduction or alteration can be obtained by physical, chemical or biological processes, by process changes, or by other means, except by diluting the concentration of the pollutants unless allowed by an applicable pretreatment standard.

*Pretreatment requirements.* Any substantive or procedural requirement related to pretreatment imposed on an industrial user, other than a pretreatment standard.

*Pretreatment standards* or *standards.* Prohibitive discharge standards, categorical pretreatment standards, and local limits.

*Program acknowledgement certificate.* Program confirmation documentation issued by the Public Works Director or his designee. The user is required to keep program acknowledgement certificate on premises and produce it upon request.

*Prohibited discharge standards* or *prohibited discharges.* Absolute prohibitions against the discharge of certain substances; these prohibitions appear in section 29-4 of this article.

*Properly shredded garbage.* The wastes from the preparation, cooking and dispensing of food that have been shredded to such a degree that all particles will be carried freely under the flow conditions normally prevailing in public sewers, with no particle greater than one-half (½) inch in any dimension.

*Publicly owned treatment works (POTW).* The wastewater system, or sewage works, owned by the city. This definition includes any sewer that conveys wastewater to the POTW treatment plant except private sewers. The term also means the city having jurisdiction over the industrial users and responsibility for the operation and maintenance of the treatment works.

*Public sewer.* A sewer which all owners of abutting properties have equal rights, and is controlled by public authority.

*Sanitary sewer.* A sewer which carries sewage and to which storm, surface, and groundwaters are not intentionally admitted.

*Septic tank waste.* Any sewage from holding tanks such as vessels, chemical toilets, campers, trailers, and septic tanks.

*Service provider.* Any third party not in the employment of the user that performs maintenance, repair, and other services on a user's grease interceptor at the user's directive.

*Severe property damage.* Substantial physical damage to property, damage to the treatment facilities which cause them to become inoperable, or substantial and permanent loss of natural resources which can reasonably be expected to occur in the absence of a bypass. Severe property damage does not mean economic loss caused by delays in production.

*Sewage* or *wastewater.* The liquid and water-carried wastes from residences, business buildings, institutions and industrial establishments, together with such ground, surface and stormwater as may be present, with no particle greater than one-half (½) inch in any dimension.

DIVISION 1. GENERALLY

*Sewage system.* All facilities for collecting, pumping, treating, and disposing of sewage.

*Sewer service charge.* The total monthly charge for sewage service.

*Sewage treatment plant.* Any arrangement of devices and structures used for treating sewage.

*Sewage works.* All facilities for collecting, pumping, treating and disposing of sewage.

*Sewer.* A pipe or conduit for carrying sewage.

*Shall.* Mandatory; as opposed to "may" which is permissive.

*Significant industrial user.* Any categorical user, or industrial user of the city's sewage works whose flow:

(1) Exceeds twenty-five thousand (25,000) gallons per day;

(2) Exceeds five (5) percent of the daily hydraulic or organic capacity of the sewage treatment plant;

(3) Is subject to a surcharge for excessive BOD and/or SS as provided for in this chapter;

(4) Has toxic material in its waste stream in toxic amounts as defined in standards issued under Section 307(a) of the Federal Water Pollution Control Act, P.L. 92-500, as amended;

(5) Is determined to have significant impact, either singly or in combination with other contributing industries, on the treatment works such that the quality of the effluent, or sludges, from the treatment works deviates from the requirements set forth in the NPDES permit issued to the city, or such that interference with the treatment process or facilities would result.

*Significant noncompliance.*

(1) Chronic violations of wastewater discharge limits, defined here as those in which sixty-six (66) percent or more of wastewater measurements taken during a six-month period exceed the daily maximum limit or average limit for the same pollutant parameter by any amount;

(2) Technical review criteria (TRC) violations, are defined here as those in which thirty-three (33) percent or more of wastewater measurements taken for each pollutant parameter during a six-month period equals or exceeds the product of the daily maximum limit or the average limit multiplied by the applicable criteria (1.4 for BOD, TSS, fats, oils and grease, and 1.2 for all other pollutants except pH);

(3) Any other discharge violation that the city believes has caused, alone or in combination with other discharges, interference or pass through (including endangering the health of city personnel or the general public);

(4) Any discharge violation that the city believes has caused imminent endangerment to the public or to the environment, or has resulted in the city's exercise of its emergency authority to halt or prevent such a discharge;

(5) Failure to meet, within ninety (90) days of the scheduled date, a compliance schedule milestone contained in an industrial pretreatment user permit or enforcement order for starting construction, completing construction, or attaining final compliance;

(6) Failure to provide within thirty (30) days after the due date, any required reports, including baseline monitoring reports, ninety-day compliance reports, periodic self-monitoring reports, and reports on compliance with compliance schedules;

(7) Failure to accurately report noncompliance;

(8) Any other violation(s) which the city determines will adversely affect the operation or implementation of the local pretreatment program.

*Slug.* Any discharge of water, sewage or industrial waste which in concentration of any given constituent or in quantity of flow exceeds for any period of duration longer than fifteen (15) minutes more than five (5) times the average twenty-four-hour concentration or flows during normal operation.

*Slug load.* Any discharge at a flow rate or concentrations which could cause a violation of the prohibited discharge standards in section 29-4 of this article or any other discharge of a nonroutine, episodic nature, including, but not limited to, an accidental spill or noncustomary batch discharge.

*Standard Industrial Classification (SIC) Code.* A classification pursuant to the Standard Industrial Classification Manual issued by the U.S. Office of Management and Budget.

*Standard specifications.* The City of Cape Girardeau standard specifications and drawings, as may be amended, on file with the city clerk.

*Storm drain (sometimes termed "storm sewer").* A sewer which carries storm and surface waters and drainage, but excludes sewage and industrial wastes, other than unpolluted cooling water.

*Stormwater.* Any flow occurring during or following any form of natural precipitation, resulting therefrom, including snowmelt.

*Suspended solids (SS).* Solids that either float on the surface of, or are in suspension in water, sewage, or other liquids, and which are removable by laboratory filtering, expressed in milligrams per liter.

*Technical review criteria (TRC).* Violations in which thirty-three (33) percent or more of wastewater measurements taken for each pollutant parameter during a six-month period equals or exceeds the product of the daily maximum limit or the average limit multiplied by the applicable criteria, 1.4 for BOD, TSS, fats, oils and grease, and 1.2 for all other pollutants except pH.

*Toxic pollutant(s).* Any pollutants, gaseous, liquid or solid, which when discharged into the sewage system may tend to interfere with any waste treatment process, or to constitute a hazard to human beings or animals, or to inhibit aquatic life or to create a hazard to recreation in the receiving water of the effluent from the sewage treatment plant. Such pollutant, or combination of pollutants, are listed as toxic in regulations promulgated by EPA under the provisions of Section 307 (33 U.S.C. 1317) of the Act.

*Treatment plant effluent.* Any discharge of pollutants from the POTW into waters of the state.

*User.* Any person, including those located outside the jurisdictional limits of the city, who contributes, causes or permits the contribution or discharge of wastewater into the POTW, including persons who contribute such wastewater from mobile sources, such as those who discharge hauled wastewater. Users include property owners who provide common interceptors for one (1) or more independent establishments, including tenants.

*User charge.* That portion of the total sewer service charge which is levied for the cost of operation, maintenance and replacement of the sewage system.

*Watercourse.* A channel in which a flow of water occurs, either continuously or intermittently.

*Wastewater.* Any liquid and water-carried industrial wastes, and sewage from residential dwellings, commercial buildings, industrial and manufacturing facilities, and institutions, whether treated or untreated, which are contributed to the POTW.

*Wastewater coordinator.* The person designated by the city to supervise the operation of the POTW, and who is charged with certain duties and responsibilities by this article or his duly authorized representative.

*Wastewater treatment plant.* That portion of the POTW designed to provide treatment of sewage and industrial wastes.

(Ord. No. 4255, art. 1, 8-15-11)

## Sec. 29-2. Abbreviations.

The following abbreviations shall have the designated meanings:

*BOD*—Biochemical oxygen demand

*CFR*—Code of Federal Regulations

*COD*—Chemical oxygen demand

*CSR*—Code of State Regulations

*EPA*—U.S. Environmental Protection Agency

*FOG*—Fats, oils, and greases

*FSE*—Food service establishments

*gpd*—Gallons per day

*l*—Liter

*mg*—Milligrams

*mg/l*—Milligrams/liter

*NPDES*—National Pollutant Discharge Elimination System

*O&M*—Operation and maintenance

*POTW*—Publicly owned treatment works

*RCRA*—Resource Conservation and Recovery Act

*SIC*—Standard Industrial Classifications

*SWDA*—Solid Waste Disposal Act (42 U.S.C. 6901 et seq.)

*TRC*—Technical review criteria

*TSS*—Total suspended solids

*USC*—United States Code

(Ord. No. 4255, art. 1, 8-15-11)

DIVISION 1. GENERALLY

## Sec. 29-3. General provisions.

(a) *Purpose and policy.* This article sets forth uniform requirements for users of the wastewater collection and publicly owned treatment works (POTW) for the City of Cape Girardeau and enables the city to comply with all applicable state and federal laws including the Clean Water Act (33 U.S.C. 1251 et seq.), and the General Pretreatment Regulations (40 CFR Part 403). The objectives of this article are:

(1) To prevent the introduction of pollutants into the POTW that will interfere with the operation of the POTW;

(2) To prevent the introduction of pollutants into the POTW which will pass through the POTW, inadequately treated, into the receiving waters or otherwise be incompatible with the POTW;

(3) To ensure that the quality of the wastewater treatment plant sludge is maintained at a level which allows its use and disposal in compliance with applicable statutes and regulations;

(4) To protect POTW personnel who may be affected by wastewater and sludge in the course of their employment and to protect the general public;

(5) To improve the opportunity to recycle and reclaim wastewater and sludge from the POTW;

(6) To provide for fees for the equitable distribution of the cost of operation, maintenance and improvement of the POTW; and

(7) To enable the city to comply with its NPDES permit conditions, sludge use and disposal requirements and any other federal or state laws to which the POTW is subject.

(b) *Administration.* Except as otherwise provided herein, the city manager shall administer, implement and enforce the provisions of this article. Any powers granted to or duties imposed upon the city manager may be delegated by the city manager to other city personnel.

(Ord. No. 4255, art. 1, 8-15-11)

## Sec. 29-4. General sewer use requirements.

(a) *Prohibited discharge standards.* No industrial user shall introduce or cause to be introduced into the POTW any pollutant or wastewater which causes pass through or interference. These general prohibitions apply to all industrial users of the POTW whether or not they are subject to categorical pretreatment standards or any other national, state or local pretreatment standards or requirements. Furthermore, no industrial user may contribute the following substances to the POTW:

(1) Pollutants which create a fire or explosive hazard in the municipal wastewater collection system and POTW, including, but not limited to, wastewater streams with closed-cup flashpoint of less than one hundred forty (140) degrees F (sixty (60) degrees C) using the test method specified in 40 CFR 261.21.

(2) Any wastewater having a pH less than 5.5 or more than 9.5, or otherwise causing corrosive structural damage to the POTW or equipment, or endangering city personnel.

(3) Solid or viscous substances in amounts which will cause obstruction of the flow in the POTW resulting in interference, but in no case solids greater than one (1) inch or two and one-half (2.5) centimeters in any dimension.

(4) Any wastewater containing pollutants, including oxygen demanding pollutants (BOD, COD, etc.), released in a discharge at a flow rate and/or pollutant concentration which, either singly or

by interaction with other pollutants, will cause interference with either the POTW; or any wastewater treatment or sludge process, or which will constitute a hazard to human or animals.

(5) Any wastewater having a temperature greater than one hundred fifty (150) degrees F or sixty-five (65) degrees C, or which will inhibit biological activity in the treatment plant, but in no case wastewater which causes the temperature at the introduction into the treatment plant to exceed one hundred four (104) degrees F (forty (40) degrees C).

(6) Petroleum oil, nonbiodegradable cutting oil, or products of mineral oil origin, in amounts that will cause interference or pass through.

(7) Any pollutants which result in the presence of toxic gases, vapors or fumes within the POTW in a quantity that may cause acute worker health and safety problems.

(8) Any trucked or hauled pollutants, except at discharge points designated by the city in accordance with section 29-6(e).

(9) Any noxious or malodorous liquids, gases, solids, or other wastewater which, either singly or by interaction with other wastes, are sufficient to create a public nuisance, a hazard to life, or to prevent entry into sewers for maintenance and repair.

(10) Any wastewater which imparts color which cannot be removed by the treatment process, such as, but not limited to, dye wastes and vegetable tanning solutions, which consequently imparts color to the treatment plant's effluent thereby violating the city's NPDES permit. Color (in combination with turbidity) shall not cause the treatment plant effluent to reduce the depth of the compensation point for photosynthetic activity by more than ten (10) percent from the seasonably established norm for aquatic life.

(11) Any wastewater containing any radioactive wastes or isotopes except as specifically approved by the city manager in compliance with applicable state or federal regulations.

(12) Stormwater, surface water, groundwater, artesian well water, roof runoff, subsurface drainage, swimming pool drainage, condensate, deionized water, noncontact cooling water, and unpolluted industrial wastewater, unless specifically authorized by the city manager.

(13) Any sludges, screenings, or other residues from the pretreatment of industrial wastes.

(14) Any medical wastes, except as specifically authorized by the city manager in an industrial pretreatment user permit.

(15) Any wastewater causing the treatment plant's effluent to fail a toxicity test.

(16) Any wastes containing detergents, surface active agents, or other substances which may cause excessive foaming in the POTW.

(17) Any discharge of fats, oils, or grease in violation of section 29-5

Wastes prohibited by this section shall not be processed or stored in such a manner that they could be discharged to the POTW. All floor drains located in process or materials storage areas must discharge to the industrial user's pretreatment facility before connecting with the POTW.

(b) *Federal categorical pretreatment standards.* The National Categorical Pretreatment Standards found at 40 CFR Chapter I, Subchapter N, Parts 405—471 and hereafter amended are hereby incorporated.

(c) *State pretreatment requirements.* The State of Missouri Pretreatment Standards found at 10 CSR Division 20-6.100 and hereafter amended are hereby incorporated.

(d) *Specific pollutant limitations.* The city will evaluate annually the need for local limits as determined by MoDNR.

(e) *City's right of revision.* The city reserves the right to establish, by ordinance or in industrial pretreatment user permits, more stringent standards or requirements on discharges to the POTW if deemed necessary to comply with the objectives in section 29-3 of this article or the general and specific prohibitions in section 29-4(a) of this article.

(f) *Special agreements.* The city reserves the right to enter into special agreements with industrial users setting out special terms under which they may discharge to the POTW. In no case will a special agreement waive compliance with a pretreatment standard or requirement. However, the industrial user may request a net gross adjustment to a categorical standard in accordance with 40 CFR 403.15. They may also request a variance from categorical pretreatment standard from EPA. Such a request will be approved only if the industrial user can prove that factors relating to its discharge are fundamentally different from the factors considered by EPA when establishing that pretreatment standard. An industrial user requesting a fundamentally different factor variance must comply with the procedural and substantive provisions in 40 CFR 403.13.

(g) *Dilution.* No industrial user shall ever increase the use of process water, or in any way attempt to dilute a discharge, as a partial or complete substitute for adequate treatment to achieve compliance with a discharge limitation unless expressly authorized by an applicable pretreatment standard or requirement. The city manager may impose mass limitations on industrial users which are using dilution to meet applicable pretreatment standards or requirements, or in other cases when the imposition of mass limitations is appropriate.

(Ord. No. 4255, art. 1, 8-15-11)

## Sec. 29-5. Fat, oil, and grease control.

(a) *Scope and purposes.* The objective of this section is to aid in preventing the introduction and accumulation of fats, oils, and greases into the municipal wastewater system which will or tend to cause or contribute to sanitary sewer blockages and obstructions. Food service establishments and other industrial, institutional or commercial establishments generating wastewater containing fats, oils or greases are subject to this section. This section regulates such users by requiring that grease interceptors and other approved strategies be installed, implemented, and maintained in accordance with the provisions hereof. Existing grease traps or interceptors that are in good repair and functioning properly may be exempt from grease trap location requirements until such time that the establishment changes ownership, undergoes a major remodel, change of purpose, or fails to meet discharge action levels.

(b) *Grease interceptor installation, inspection, maintenance, record-keeping, and grease removal.*

(1) Grease interceptors shall be installed and maintained at the user's expense, when a user operates a food service establishment. Grease interceptors may be required in noncooking or cold dairy and frozen foodstuffs establishments and other industrial or commercial establishments when the establishment generates wastewater containing fat or grease and the public works director or his designee determines an interceptor is necessary to prevent contribution or accumulation of grease to the sanitary sewer collection and treatment system. No user shall allow wastewater discharge concentration from subject grease interceptor to exceed an established action level of one hundred (100) milligrams per liter, expressed as hexane extractable material. Any user in violation of these limits shall be subject to penalties as set out in this article. All grease interceptors shall be of a type, design, and capacity approved by the public works director or his designee and shall be readily and easily accessible for

maintenance and repair, including cleaning and for inspection. All grease interceptors shall be serviced and emptied of accumulated waste content as required in order to maintain minimum design capability or effective volume of the grease interceptor, but not less often than every sixty (60) days or as permitted in a valid program modification. Users who are required to pass wastewater through a grease interceptor shall:

a. Provide for a minimum hydraulic retention time of twenty-four (24) minutes at actual peak flow between the influent and effluent baffles, with twenty-five (25) percent of the total volume of the grease interceptor being allowed for any food-derived solids to settle or accumulate and floatable grease-derived materials to rise and accumulate, identified hereafter as a solids blanket and grease cap respectively.

b. Remove any accumulated grease cap and solids blanket as required, but at intervals of not longer than sixty (60) days at the user's expense, or in accordance with a valid program modification or other public works director or his designee's requirements. Grease interceptors shall be kept free of inorganic solid materials, such as grit, rocks, gravel, sand, eating utensils, styrofoam, cigarettes, shells, towels, rags, etc., which could settle into this solids blanket and thereby reduce the effective volume of the grease interceptor.

c. Operate and maintain the grease interceptor to achieve and maintain any applicable grease action level. This shall mean any wastewater sample taken from such grease interceptor must meet the terms of numerical limit attainment described in section 29-5(b)(1).

d. If a user documents that conditions exist ("space constraints") on their establishment site that limit the ability to locate a grease interceptor on the exterior of the establishment, the user may request an interior location for the interceptor. Such request shall contain the following information:

    1. Location of city sewer main and easement in relation to available exterior space outside building.

    2. Existing plumbing layout at or in a site.

    3. A statement of understanding, signed by the user or authorized agent, acknowledging and accepting conditions the public works director or his designee may place on permitting an identified interior location. Conditions may include requirements to use alternative mechanisms, devices, procedures, or operations relative to an interior location.

    4. Grant of access to interceptor for city inspection.

    5. Such other information as may be required by the public works director or his designee.

e. The use of biological or other additives as a grease degradation or conditioning agent is not permissible.

f. The use of automatic grease removal systems is permissible only upon prior written approval of the public works director or his designee and the Cape Girardeau County Public Health Center Director or designee. Any user using a grease interceptor located on the interior of the site shall be subject to any operational requirements set forth by the City of Cape Girardeau. Any user using this equipment shall operate the system in such a manner that attainment of the grease wastewater discharge limit, as measured from the unit's outlet, is achieved as required by the public works director or his designee.

g. The public works director or his designee may make determinations of grease interceptor adequacy need, design, appropriateness, application, location, modification(s), and conditional usage based on review of all relevant information regarding grease interceptor performance, facility site and building plan review by all regulatory reviewing agencies and may require repairs to, or modification or replacement of grease interceptors.

h. The user shall allow access to the public works director or his designee for the purpose of determining compliance with this article.

(2) The user shall maintain a written record of grease interceptor maintenance for three (3) years. All such records will be available for inspection at all times. These records shall include:

a. FSE name and physical location;

b. Date of grease interceptor service;

c. Time of grease interceptor service;

d. Name of grease interceptor service company;

e. Name and signature of grease interceptor service company agent performing said service;

f. Established service frequency and type of service;

g. Number and size of each grease interceptor serviced at FSE location;

h. Approximated amount, per best professional judgment of contract service provider, of grease and solids removed from each grease interceptor;

i. Total volume of waste removed from each grease interceptor;

j. Destination of removed wastes, food solids, and wastewater disposal;

k. Signature and date of FSE personnel confirming service completion;

l. Such other information as required by public works director or his designee.

(3) No nongrease-laden sources are allowed to be connected to sewer lines intended for grease interceptor service.

(4) Access manholes shall have an installed diameter of twenty-four (24) inches, and shall be provided over each chamber, interior baffle wall, and each sanitary tee. The access penetrations, commonly referred to as "risers" into the grease interceptor shall also be, at a minimum, twenty-four (24) inches in diameter. The access manholes shall extend at least to finished grade and be designed and maintained to prevent water inflow or infiltration. The manholes shall also have readily removable covers to facilitate inspection, grease removal, and wastewater sampling activities.

(5) A user may request a modification to the following requirements of this section. Such request for a modification shall be in writing and shall provide the information set forth below:

a. The user's grease interceptor pumping frequency. The public works director or his designee may modify the sixty-day grease interceptor pump out frequency when the user provides data, and performance criteria relative to the overall effectiveness of a proposed alternate and such can be substantiated by the public works director or his designee.

b. Grease interceptor maintenance and service procedures. The public works director or his designee may modify the method(s) or procedure(s) utilized to service a grease interceptor when the user provides data, and performance criteria relative to the overall effectiveness of a proposed alternate method or procedure and such can be substantiated by the public

works director or his designee. If a modification to maintenance and service procedures is permitted it shall be a conditional discharged permit approval.

c. Any modification must be approved by the public works director or his designee in written form before implementation by the user or the user's designated service provider. The user shall pay modification fees as set forth in the city fee schedule.

(Ord. No. 4255, art. 1, 8-15-11)

## Sec. 29-6. Pretreatment of wastewater.

(a) *Pretreatment facilities.* Industrial users shall provide necessary wastewater treatment as required to comply with this article and shall achieve compliance with all categorical pretreatment standards, local limits and the prohibitions set out in section 29-4(a) above within the time limitations specified by the EPA, the state or the city manager whichever is more stringent. Any facilities required to pretreat wastewater to a level acceptable to the city shall be provided, operated, and maintained at the industrial user's expense. Detail plans showing the pretreatment facilities and operating procedures shall be submitted to the city for review, and shall be acceptable to the city before construction of the facility. The review of such plans and operating procedures will in no way relieve the industrial user from the responsibility of modifying the facility as necessary to produce an acceptable discharge to the city under the provisions of this article.

(b) *Additional pretreatment measures.*

(1) Whenever deemed necessary, the city manager may require industrial users to restrict their discharge during peak flow periods, designate that certain wastewater be discharged only into specific sewers, relocate and/or consolidate points of discharge, separate sewage wastestreams from industrial wastewaters, and such other conditions as may be necessary to protect the POTW and determine the industrial user's compliance with the requirements of this article.

(2) Fats, oil, and grease interceptors shall be subject to fats, oil, and grease control regulations contained in section 29-5. Sand interceptors shall be provided when, in the opinion of the city manager, they are necessary for the proper handling of wastewater containing excessive amounts of sand; except that such interceptors shall not be required for residential users. All interceptors units shall be so located to be easily accessible for cleaning and inspection. Such interceptors shall be inspected, cleaned, and repaired regularly, as needed, by the owner at his expense.

(3) Industrial users with the potential to discharge flammable substances may be required to install and maintain an approved combustible gas detection meter.

(c) *Accidental discharge/slug control plans.* The city manager may require any industrial user to develop and implement an accidental discharge/slug control plan. At least once every two (2) years the city manager shall evaluate whether each significant industrial user needs such a plan. Any industrial user required to develop and implement an accidental discharge/control slug plan shall submit a plan which addresses, at a minimum, the following:

(1) Description of discharge practices, including non-routine batch discharges.

(2) Description of stored chemicals.

(3) Procedures for immediately notifying the POTW of any accidental or slug discharge. Such notification must also be given for any discharge which could violate any of the prohibited discharges in section 29-4(a) of this article.

(4) Procedures to prevent adverse impact from any accidental or slug discharge. Such procedures include, but are not limited to, inspection and maintenance of storage areas, handling and transfer of materials, loading and unloading operations, control of plant site run-off, worker training, building of containment structures or equipment, measures for containing toxic organic pollutants (including solvents), and/or measures and equipment for emergency response.

(d) *Tenant responsibility.* Where an owner of property leases premises to any other person as a tenant under any rental or lease agreement, if either the owner or the tenant is an industrial user, either or both may be held responsible for compliance with this article.

(e) *Hauled wastewater.*

(1) Septic tank waste may be accepted into the POTW at a designated receiving structure within the treatment plant area, and at such times as are established by the city manager, provided such wastes do not violate section 29-4(a) of this article or any other requirements established or adopted by the city. A waste hauler permit for individual vehicles to use such facilities shall be issued by the city manager pursuant to the requirements of this section.

(2) The discharge of hauled industrial wastes as "industrial septage" requires prior approval and a waste hauler permit from the city. The city manager shall have authority to prohibit the disposal of such wastes, if such disposal would interfere with the treatment plant operation. Waste haulers are subject to all other sections of this article.

(3) Fees for dumping domestic and industrial septage will be established as part of the industrial user fee system as authorized in section 29-17(a).

(f) *Damage to sewage equipment or appurtenances.* It shall be unlawful for any person to break, damage, destroy, cover, uncover, fill over, deface or tamper with any structure, appurtenance or equipment which is a part of the sewage works. Any person convicted of violating this section shall be punished in accordance with section 1-8 of the Code of Ordinances.

(Ord. No. 4255, art. 1, 8-15-11)

## Sec. 29-7. Industrial pretreatment user permit eligibility.

(a) *Wastewater survey.* When requested by the city manager, all industrial users must submit information on the nature and characteristics of their wastewater by completing a wastewater survey prior to commencing their discharge. The city manager is authorized to prepare a form for this purpose and may periodically require industrial users to update the survey. Failure to complete this survey shall be reasonable grounds for terminating service to the industrial user and shall be considered a violation of this article.

(b) *Industrial pretreatment user permit requirement.*

(1) It shall be unlawful for any significant user to discharge wastewater into the city's POTW without obtaining an industrial pretreatment user permit from the city manager. Any violation of the terms and conditions of an industrial pretreatment user permit shall be deemed a violation of this article and subjects the industrial pretreatment user permittee to the sanctions set out in sections 29-13 through 29-15. Obtaining an industrial pretreatment user permit does not relieve a permittee of its obligation to comply with all federal and state pretreatment standards or requirements or with any other requirements of federal, state and local law.

(2) The city manager may require other industrial users, including liquid waste haulers, to obtain an industrial pretreatment user permits as necessary to carry out the purpose of this article.

(c) *Industrial pretreatment user permitting existing connections.* Any significant industrial user which discharges industrial waste into the POTW prior to the effective date of this article and who wishes to continue such discharges in the future, shall, within ninety (90) days after said date, apply to the city for an industrial pretreatment user permit, and shall not cause or allow discharges to the POTW to continue after ninety (90) days of the effective date of this article except in accordance with an industrial pretreatment user permit issued by the city manager.

(d) *Industrial pretreatment user permitting new connections.* Any significant industrial user proposing to begin or recommence discharging industrial wastes into the POTW must obtain an industrial pretreatment user permit prior to beginning or recommencing of such discharge. An application for this wastewater permit must be filed at least ninety (90) days prior to the date upon which discharge will begin.

(e) *Industrial pretreatment user permitting extra jurisdictional industrial users.* Any existing significant industrial user located beyond the city limits shall submit an industrial pretreatment user permit application, in accordance with section 29-7(f) below, within ninety (90) days of the effective date of this article. New significant industrial users located beyond the city limits shall submit such application to the city manager ninety (90) days prior to any proposed discharge into the POTW.

(f) *Industrial pretreatment user permit application contents.* In order to be considered for an industrial pretreatment user permit, all industrial users required to have an industrial pretreatment user permit must submit the information required by section 29-9(a)(2) of this article. The city manager shall approve a form to be used as a permit application. In addition, the following information may be requested:

(1) Description of activities, facilities, and plant processes on the premises, including a list of all raw materials and chemicals used or stored at the facility which are, or could accidentally or intentionally be, discharged to the POTW.

(2) Number of employees, hours of operation, and proposed or actual hours of operation of the plant.

(3) Each product produced by type, amount, process or processes, and rate of production.

(4) Type and amount of raw materials processed (average and maximum per day).

(5) The site plans, floor plans, mechanical and plumbing plans, and details to show all sewers, floor drains, and appurtenances by size, location, and elevation, and all points of discharge.

(6) Time and duration of the discharge.

(7) Any other information as may be deemed necessary by the city manager to evaluate the industrial pretreatment user permit application.

Incomplete or inaccurate applications will not be processed and will be returned to the industrial user for revision.

(g) *Application signatories and certification.* All industrial pretreatment user permit applications and industrial user reports must contain the following certification statement and be signed by an authorized representative of the industrial user.

"I certify under penalty of law that this document and all attachments were prepared under my direction or supervision in accordance with a system designed to assure that qualified personnel properly gather and evaluate the information submitted. Based on my inquiry of the person or persons who manage the system, or those persons directly responsible for gathering the information, the information submitted is to the best of my knowledge and belief, true, accurate, and complete. I

am aware that there are significant penalties for submitting false information, including the possibility of fine and imprisonment for knowing violations."

(h) *Industrial pretreatment user permit decisions.* The city manager will evaluate the data furnished by the industrial user and may require additional information. Within thirty (30) days of receipt of a complete industrial pretreatment user permit application, the city manager will determine whether or not to issue an industrial pretreatment user permit. If no determination is made within this time period, the application will be deemed denied. The city manager may deny any application for an industrial pretreatment user permit.

(Ord. No. 4255, art. 1, 8-15-11)

## Sec. 29-8. Industrial pretreatment user permit issuance process.

(a) *Industrial pretreatment user permit duration.* Industrial pretreatment user permits shall be issued for a specified time period, not to exceed five (5) years. An industrial pretreatment user permit may be issued for a period less than five (5) years, at the discretion of the city manager. Each industrial pretreatment user permit will indicate a specific date upon which it will expire.

(b) *Industrial pretreatment user permit contents.* Industrial pretreatment user permits shall include such conditions as are reasonably deemed necessary by the city manager to prevent pass through or interference, protect the quality of the water body receiving the treatment plant's effluent, protect worker health and safety, facilitate sludge management and disposal, protect against damage to the POTW.

(1) Industrial pretreatment user permits must contain the following conditions:

a. A statement that indicates industrial pretreatment user permit duration, which in no event shall exceed five (5) years.

b. A statement that the industrial pretreatment user permit is nontransferable without prior notification to and approval from the city, and provisions for furnishing the new owner or operator with a copy of the existing industrial pretreatment user permit.

c. Effluent limits applicable to the user based on applicable standards in federal, state, or local law.

d. Self monitoring, sampling, reporting, notification, and recordkeeping requirements. These requirements shall include an identification of pollutants to be monitored, sampling location, sampling frequency, and sample type based on federal, state, and local law.

e. Statement of applicable civil, criminal, and administrative penalties for violation of pretreatment standards and requirements, and any applicable compliance schedule. Such schedule may not extend the time for compliance beyond that required by applicable federal, state, or local law.

(2) Industrial pretreatment user permits may contain, but need not be limited to, the following:

a. Limits on the average and/or maximum rate of discharge, time of discharge, and/or requirements for the flow regulation and equalization.

b. Limit on the instantaneous, daily and monthly average and/or maximum concentration, mass, or other measure of identified wastewater pollutants or properties.

c. Requirements for the installation of pretreatment technology, pollution control, or construction of appropriate containment devices, designed to reduce, eliminate, or prevent the introduction of pollutants into the treatment works.

d. Development and implementation of spill control plans or other special conditions including management practices necessary to adequately prevent accidental, unanticipated, or routine discharges.

e. Development and implementation of waste minimization plans to reduce the amount of pollutants discharged into the POTW.

f. The unit charge or schedule of industrial user charges and fees for the management of the wastewater discharges to the POTW.

g. Requirements for installation and maintenance of inspection and sampling facilities and equipment.

h. A statement that compliance with the industrial pretreatment user permit does not relieve the permittee of responsibility for compliance with all applicable federal and state pretreatment standards, including those which become effective during the term of the industrial pretreatment user permit.

i. Other conditions as deemed appropriate by the city manager to ensure compliance with this article, state and federal laws, rules, and regulations.

(c) *Industrial pretreatment user permit appeals.* Any person, including the industrial user may petition the city to reconsider the terms of an industrial pretreatment user permit within sixty (60) days of its issuance.

(1) Failure to submit a timely petition for review shall be deemed to be a waiver of the administrative appeal.

(2) In its petition, the appealing party must indicate the industrial pretreatment user permit provisions objected to, the reasons for the objection, and the alternative condition, if any, it seeks to place in the industrial pretreatment user permit.

(3) The effectiveness of the industrial pretreatment user permit shall not be stayed pending appeal.

(4) If the city manager fails to act within sixty (60) days, a request for reconsideration shall be denied. Decisions not to reconsider an industrial pretreatment user permit, not to issue an industrial pretreatment user permit, or not to modify an industrial pretreatment user permit, shall be considered final administrative action.

(5) Any permit applicant may file with the city council a written request for reconsideration of the decision within ten (10) days. The city council may hear the appeal and shall make a final ruling within thirty-five (35) days of receipt of the user's written appeal. The decision of the city council shall be considered final administrative action for the purposes of judicial review.

(d) *Industrial pretreatment user permit modification.* The city manager may modify the industrial pretreatment user permit for good cause including, but not limited to, the following:

(1) To incorporate any new or revised federal, state, or local pretreatment standards or requirements.

(2) To address significant alterations or additions to the industrial user's operation, processes, or wastewater volume or character since the time of industrial pretreatment user permit issuance.

(3) A change in the POTW that requires either a temporary or permanent reduction or elimination of the authorized discharge.

(4) Information indicating that the permitted discharge poses a threat to the city's POTW, city personnel, or the receiving waters.

(5) Violation of any terms or conditions of the industrial pretreatment user permit.

(6) Misrepresentation or failure to fully disclose all relevant facts in the industrial pretreatment user permit application or in any required reporting.

(7) Revisions of or a grant of variance from categorical pretreatment standards pursuant to 40 CFR 403.13.

(8) To correct typographical or other errors in the industrial pretreatment user permit.

(9) To reflect a transfer of the facility ownership and/or operation to a new owner/operator.

The filing of a request by the permittee for an industrial pretreatment user permit modification does not stay any industrial pretreatment user permit conditions.

(e) *Industrial pretreatment user permit transfer.* Industrial pretreatment user permits may be reassigned or transferred to a new owner and/or operator only if the permittee gives at least ninety (90) days advance notice to the city manager and the city manager approves the industrial pretreatment user permit transfer. The notice to the city manager must include a written certification by the new owner and/or operator which:

(1) States that the new owner and/or operator has no immediate intent to change the facility's operations and processes.

(2) Identifies the specific date on which the transfer is to occur.

(3) Acknowledges full responsibility for complying with the existing industrial pretreatment user permit.

Failure to provide advance notice of a transfer renders the industrial pretreatment user permit voidable on the date of a facility transfer.

(f) *Industrial pretreatment user permit revocation.* Industrial pretreatment user permits may be revoked for the following reasons:

(1) Failure to notify the city of significant changes to the wastewater prior to the changed discharge.

(2) Failure to provide prior notification to the city of changed condition pursuant to section 29-9(e).

(3) Misrepresentation or failure to fully disclose all relevant facts in the industrial pretreatment user permit application.

(4) Falsifying self-monitoring reports.

(5) Tampering with monitoring equipment.

(6) Refusing to allow the city timely access to the facility premises and records.

(7) Failure to meet effluent limitations.

(8) Failure to pay fines and penalties.

(9) Failure to pay sewer charges.

(10) Failure to meet compliance schedules.

(11) Failure to complete a wastewater survey or the industrial pretreatment user permit application.

(12) Failure to provide advance notice of the transfer of a permitted facility.

(13) Violation of any pretreatment standard or requirement, or any terms of the industrial pretreatment user permit or this article.

Industrial pretreatment user permits shall be voidable upon nonuse, cessation of operations, or transfer of business ownership. All industrial pretreatment user permits are void upon the issuances of a new wastewater discharge permit.

(g) *Industrial pretreatment user permit reissuance.* A significant industrial user shall apply for industrial pretreatment user permit reissuance by submitting a complete industrial pretreatment user permit application in accordance with section 29-8(f) a minimum of ninety (90) days prior to the expiration of the industrial user's existing industrial pretreatment user permit.

(Ord. No. 4255, art. 1, 8-15-11)

## Sec. 29-9. Reporting requirements.

(a) *Baseline monitoring reports.*

(1) Within either one hundred eighty (180) days after the effective date of a categorical pretreatment standard, or the final administrative decision on a category determination under 40 CFR 403.6(a)(4), whichever is later, existing significant industrial users subject to such categorical pretreatment standards, and currently discharging to or scheduled to discharge to the POTW, shall be required to submit to the city a report which contains the information listed in subsection (2), below. At least ninety (90) days prior to commencement of their discharge, new sources, and sources that become industrial users subsequent to the promulgation of an applicable categorical standard, shall be required to submit to the city a report which contains the information listed in paragraph 29-9(b), below. A new source shall also be required to report the method of pretreatment it intends to use to meet applicable pretreatment standards. A new source shall also give estimates of its anticipated flow and quantity of pollutants discharged.

(2) The industrial user shall submit the information required by this section including:

a. *Identifying information.* The name and address of the facility including the name of the operator and owners.

b. *Industrial pretreatment user permits.* A list of any environmental control industrial pretreatment user permits held by or for the facility.

c. *Description of operations.* A brief description of the nature, average rate of production, and standard industrial classifications of the operation(s) carried out by such industrial user. This description should include a schematic process diagram which indicates points of discharge to the POTW from the regulated processes.

d. *Flow measurement.* Information showing the measured average daily and maximum daily flow, in gallons per day, to the POTW from the regulated process streams and other streams, as necessary, to allow use of the combined wastestream formula set out in 40 CFR 403.6(e).

e. *Measurement of pollutants.*

1. Identify the categorical pretreatment standards applicable to each regulated process.

2. Submit the results of sampling and analysis identifying the nature and concentration (and/or mass, where required by the standard or by the city) of regulated pollutants in the discharge from each regulated process. Instantaneous, daily maximum and long term average concentrations (or mass, where required) shall be reported. The sample

shall be representative of daily operations and shall be analyzed in accordance with procedures set out in section 29-9(j).

3. Sampling must be performed in accordance with procedures set out in section 29-9(k).

f. *Certification.* A statement reviewed by the industrial user's authorized representative and certified by a qualified professional, indicating whether pretreatment standards are being met on a constant basis, and, if not, whether additional operation and maintenance (O&M) and/or additional pretreatment is required to meet the pretreatment standards and requirements.

g. *Compliance schedule.* If additional pretreatment and/or O&M will be required to meet the pretreatment standards; the shortest schedule by which the industrial user will provide such additional pretreatment and/or O&M. The completion date in this schedule shall not be later than the compliance date established for the applicable pretreatment standards. A compliance schedule pursuant to this section must meet the requirements set out in sections 29-7(f) and 29-13(d) of this article.

h. All baseline monitoring reports must be signed and certified in accordance with section 29-7(g).

(b) *Compliance schedule progress report.* The following conditions shall apply to the schedule required by section 29-9(a)(2)g. The schedule shall contain progress increments in the form of dates for the commencement and completion of major events leading to the construction and operation of additional pretreatment required for the user to meet the applicable pretreatment standards (such events include hiring an engineer, completing preliminary and final plans, executing contracts for major components, commencing and completing construction, beginning and conducting routine operation) No increment referred to above shall exceed nine (9) months. The industrial user shall submit a progress report to the city manager no later than fourteen (14) days following each date in the schedule and the final date of compliance including, as a minimum, whether or not it complied with the increment of progress, the reason for any delay, (and, if appropriate) the steps being taken by the industrial user to return to the established schedule. In no event shall more than nine (9) months elapse between such progress reports to the city manager.

(c) *Report on compliance with categorical pretreatment standards deadline.* Within ninety (90) days following the date for final compliance with applicable categorical pretreatment standards, or in the case of a new source following commencement of the introduction of wastewater into the POTW, any industrial user subject to such pretreatment standards and requirements shall submit to the city a report containing the information described in section 29-9(a)(2)d. through f. For industrial users subject to equivalent mass or concentration limits established in accordance with the procedure in the 40 CFR 403.6(c), this report shall contain a reasonable measure of the industrial user's long term production rate. For all other industrial users subject to categorical pretreatment standards expressed in terms of allowable pollutant discharge per unit of production (or other measure of operation), this report shall include the industrial user's actual production during the appropriate sampling period. All compliance reports must be signed and certified in accordance with section 29-7(g).

(d) *Periodic compliance reports*

(1) Any significant industrial user subject to a pretreatment standard shall, at a frequency determined by the city manager but in no case less than twice per year (in June and December), submit a report indicating the nature and concentration of pollutants in the discharge which are limited by such pretreatment standards and the measured or estimated

average and maximum daily flows for the reporting period. All periodic compliance reports must be signed and certified in accordance with section 29-7(g).

(2) All wastewater samples must be representative of the industrial user's discharge. Wastewater monitoring and flow measurement facilities shall be properly operated, kept clean, and maintained in good working order at all times. The failure of an industrial user to keep its monitoring facility in good working order shall not be grounds for the industrial user to claim that the sample results are unrepresentative of its discharge.

(3) If an industrial user subject to the monitoring requirement in and of this section monitors any pollutant more frequently than required by the POTW, using the procedures prescribed in section 29-9(j) and (k) of this article the results of this monitoring shall be included in the report.

(e) *Report of changed conditions* Each industrial user is required to notify the city manager of any planned significant changes to the industrial user's operations or system which might alter the nature, quality or volume of its wastewater at least sixty (60) days before the change.

(1) The city manager may require the industrial user to submit such information as may be deemed necessary to evaluate the changed condition, including the submission of an industrial pretreatment user permit application under section 29-7(f).

(2) The city manager may issue an industrial pretreatment user permit under section 29-7(h) or modify an existing discharge permit under section 29-8(d).

(3) No industrial user shall implement the planned changed condition(s) until and unless the city manager has responded to the industrial user's notice.

(4) For purpose of this requirement flow increases of ten (10) percent or greater, and the discharge of any previously unreported pollutants shall be deemed significant.

(f) *Reports of potential problems.*

(1) In the case of any discharge including, but not limited to, accidental discharges, discharges of a nonroutine, episodic nature, a noncustomary batch discharge, or a slug load which may cause potential problems for the POTW (including a violation of the prohibited discharge standards in section 29-4(a) of this article), it is the responsibility of the industrial user to immediately telephone and notify the city manager of the incident. This notification shall include the location of discharge, type of waste, concentration and volume, if known, and corrective actions taken by the industrial user.

(2) Within five (5) days following such discharge, the industrial user shall, unless waived by the city manager, submit a detailed written report describing the cause(s) of the discharge and the measures taken by the industrial user to prevent similar future occurrences. Such notification shall not relieve the industrial user of any expense, loss, damage, or other liability which may be incurred as a result of damage to the POTW, natural resources, or any other damage to person or property; nor shall such notification relieve the industrial user of any fines, civil penalties, or other liability which may be imposed by this article.

(3) Failure to notify the city manager of potential problem discharges shall be deemed a separate violation of this article.

(4) A notice shall be permanently posted on the industrial user's bulletin board or other prominent place advising employees whom to call in the event of a discharge described in subsection (1), above. Employers shall ensure that all employees, who may cause or suffer such a discharge to occur, are advised of the emergency notification procedure.

(g) *Reports from nonsignificant industrial users.* All industrial users not subject to categorical pretreatment standards and not required to obtain an industrial pretreatment user permit shall provide appropriate reports to the city as the city manager may require.

(h) *Notice of violation/repeat sampling reporting.* If sampling performed by an industrial user indicates a violation, the industrial user must notify the control authority within twenty-four (24) hours of becoming aware of the violation. The industrial user shall also repeat the sampling and analysis and submit the results of the repeat sampling and analysis to the control authority within thirty (30) days after becoming aware of the violation. The industrial user is not required to resample if the POTW performs monitoring at the industrial user's at least once a month, or if the POTW performs sampling between the industrial user's initial sampling and when the industrial user receives the results of this sampling.

(i) *Notification of the discharge of hazardous waste.*

(1) Any industrial user who commences the discharge of hazardous waste shall notify the POTW, the EPA Regional Waste Management Division Director, and MDNR Waste Management Program Director in writing of any discharge into the POTW of a substance which, if otherwise disposed of, would be a hazardous waste under 40 CFR Part 261. Such notification must include the name of the hazardous waste as set forth in 40 CFR Part 261, the EPA hazardous waste number, and the type of discharge (continuous, batch, or other). If the industrial user discharges more than one hundred (100) kilograms of such waste per calendar month to the POTW, the notification shall contain the following information to the extent such information is known and readily available to the industrial user: an identification of the hazardous constituents contained in the wastes, an estimation of the mass and concentration of such constituents in the waste stream discharged during that calendar month, and an estimation of the mass of constituents in the waste stream expected to be discharged during the following twelve (12) months. All notifications must take place no later than one hundred eighty (180) days after the discharge commences. Any notification under this paragraph need be submitted only once for each hazardous waste discharged. However, notifications of changed discharges must be submitted under section 29-9(e), above. The notification requirement in this section does not apply to pollutants already reported under the self-monitoring requirements of section 29-9(a), (c) and (d) above.

(2) Dischargers are exempt from the requirements of paragraph 29-9(a) of this subsection during a calendar month in which they discharge no more than fifteen (15) kilograms of hazardous wastes, unless the wastes are acute hazardous wastes as specified in 40 CFR 261.30(d) and 261.33(e). Discharge of more than fifteen (15) kilograms of non-acute hazardous wastes in a calendar month, or of any quantity of acute hazardous wastes as specified in 40 CFR 261.30(d) and 261.33(e), requires a one-time notification.

Subsequent months during which the industrial user discharges more than such quantities of any hazardous waste do not require additional notification.

(3) In the case of any new regulations under Section 3001 of RCRA identifying additional characteristics of hazardous waste or listing any additional substance as a hazardous waste, the industrial user must notify the POTW, the EPA Regional Waste Management Waste Division Director, and the MDNR Waste Management Program Director of the discharge of such substance within ninety (90) days of the effective date of such regulations.

(4) In the case of any notification made under this section, the industrial user shall certify that it has a program in place to reduce the volume and toxicity of hazardous wastes generated to the degree it has determined to be economically practical.

(j) *Analytical requirements.* All pollutant analyses, including sampling techniques, to be submitted as part of an industrial pretreatment user permit application or report shall be performed in accordance with the techniques prescribed in 40 CFR Part 136, unless otherwise specified in an applicable categorical pretreatment standard. If 40 CFR Part 136 does not contain sampling or analytical techniques for the pollutant in question, sampling and analyses must be performed in accordance with procedures approved by the EPA.

(k) *Sample collection.*

(1) Except as indicated in subsection (2), below, the industrial user must collect wastewater samples using flow proportional composite collection techniques. In the event flow proportional sampling is infeasible, the city manager may authorize the use of time proportional sampling or through a minimum of four (4) grab samples where the user demonstrates that this will provide a representative sample of the effluent being discharged. In addition, grab samples may be required to show compliance with instantaneous discharge limits.

(2) Samples for oil grease, temperature, pH, cyanide, phenols, toxicity, sulfides, and volatile chemicals must be obtained using grab collection techniques.

(l) *Determination of noncompliance.* The city manager may use a grab sample to determine noncompliance with pretreatment standards.

(m) *Timing.* Written reports will be deemed submitted on the date postmarked. For reports which are not mailed, postage prepaid, into a mail facility serviced by the U.S. Postal Service, the date of receipt of the report shall govern.

(n) *Recordkeeping.* Industrial users shall retain, and make available for inspection and copying, all records of monitoring activities, results and information required to be retained under this article. These records shall remain available for a period of at least three (3) years. This period shall be automatically extended for the duration of any litigation concerning compliance with this article, or where the industrial user has been specifically notified of a longer retention period by the city manager or the control authority.

(Ord. No. 4255, art. 1, 8-15-11)

## Sec. 29-10. Compliance monitoring.

(a) *Inspection and sampling.* The city shall have the right to enter the facilities of any industrial user to ascertain whether the purpose of this article, and any permit or order issued hereunder, is being met and whether the industrial user is complying with all requirements thereof. Industrial users shall allow the city manager or his representative ready access to all parts of the premises for the purposes of inspection, sampling, records examination and copying, and the performance of any additional duties.

(1) Where an industrial user has security measures in force which require proper identification and clearance before entry into its premises, the industrial user shall make necessary arrangements with its security guards so that, upon presentation of suitable identification, personnel the city, state, and EPA will be permitted to enter without delay, for the purposes of performing their specific responsibilities.

(2) The city, state, and EPA shall have the right to set up on the industrial user's property, or require installation of, such devices as are necessary to conduct sampling and/or metering of the user's operations.

(3) The city may require the industrial user to install monitoring equipment as necessary. The facility's sampling and monitoring equipment shall be maintained at all times in a safe and proper operating condition by the industrial user at its own expense. All devices used to measure wastewater flow and quality shall be calibrated periodically to ensure their accuracy.

(4) Any temporary or permanent obstruction to safe and easy access to the industrial facility to be inspected and/or sampled shall be promptly removed by the industrial user at the written or verbal request of the city manager and shall not be replaced. The costs of clearing such access shall be born by the industrial user.

(5) Unreasonable delays in allowing city personnel access to the industrial user's premises shall be a violation of this article.

(6) While performing the necessary work on private properties referred to in section 29-10(a), the city manager or duly authorized employees of the city shall observe all safety rules applicable to the premises established by the company.

(b) *Search warrants.* If the city manager has been refused access to a building, structure or property or any part thereof, and if the city manager has demonstrated probable cause to believe that there may be a violation of this article or that there is need to inspect as part of a routine inspection program of the city designed to verify compliance with this article or any permit or order issued hereunder, or to protect the overall public health, safety and welfare of the community, then upon application by the city attorney, the municipal court judge of the city shall issue a search and/or seizure warrant describing therein the specific location subject to warrant. The warrant shall specify what, if anything, may be searched and/or seized on the property by the city manager in the company of a uniformed police office of the city. In the event of an emergency affecting public safety, inspections shall be made without the issuance of a warrant.

(Ord. No. 4255, art. 1, 8-15-11)

## Sec. 29-11. Confidential information.

Information and data on an industrial user obtained from reports, surveys, industrial pretreatment user permit applications, industrial pretreatment user permits, and monitoring programs, and from the city inspection and sampling activities, shall be available to the public without restriction, unless the industrial user specifically requests, and is able to demonstrate to the satisfaction of the city manager, that the release of such information would divulge information, processes or methods of production entitled to protection as trade secrets under applicable state law. When requested and demonstrated by the industrial user furnishing a report that such information should be held confidential, the portions of a report which might disclose trade secrets or secret processes shall not be made available for inspection by the public, but shall be made available immediately upon request to governmental agencies for uses related to the NPDES program or pretreatment program, and in enforcement proceedings involving the person furnishing the report. Wastewater constituents and characteristics and other "effluent data" as defined by 40 CFR 2.302 will not be recognized as confidential information and will be available to the public without restriction.

(Ord. No. 4255, art. 1, 8-15-11)

## Sec. 29-12. Publication of industrial users in significant noncompliance.

The city shall publish annually, in the largest daily newspaper published in the municipality where the POTW is located, a list of the industrial users which, during the previous twelve (12) months, were in significant noncompliance with applicable pretreatment standards and requirements.

(Ord. No. 4255, art. 1, 8-15-11)

## Sec. 29-13. Administrative enforcement remedies.

(a) *Notification of violation.* Whenever the city manager finds that any user has violated or is violating this article, an industrial pretreatment user permit or order issued hereunder, or any other pretreatment requirement, the city manager or his agent may serve upon said user a written notice of violation. Within five (5) days of the receipt of this notice, an explanation of the violation and a plan for the satisfactory correction and prevention thereof, to include specific required actions, shall be submitted by the user to the city manager. Submission of this plan in no way relieves the user of liability from any violations occurring before or after receipt of the notice of violation. Nothing in this section shall limit the authority of the city to take any action, including emergency actions or any other enforcement action, without first issuing a notice of violation.

(b) *Consent orders.* The city manager is hereby empowered to enter into consent orders, assurances of voluntary compliance, or other similar documents establishing an agreement with any industrial user responsible for noncompliance. Such orders will include specific action to be taken by the user to correct the noncompliance within a time period also specified by the order. Consent orders shall have the same force and effect as the administrative orders issued pursuant to sections 29-13(d) and 29-13(e) below and shall be judicially enforceable.

(c) *Show cause hearing.* The city manager may order any user which causes or contributes to violation(s) of this article, industrial pretreatment user permits, or orders issued hereunder, or any other pretreatment standard or requirement, to appear before the city manager and show cause why a proposed enforcement action should not be taken. Notice shall be served on the user specifying the time and place for the meeting, the proposed enforcement action, the reasons for such action, and a request that the user show cause why this proposed enforcement action should not be taken. The notice of the meeting shall be served personally or by registered or certified mail (return receipt requested) at least ten (10) days prior to the hearing. Such notice may be served on any authorized representative of the user. Whether or not the user appears as ordered, immediate enforcement action may be pursued following the hearing date. A show cause hearing shall not be a prerequisite for taking any other action against the user.

(d) *Compliance orders.* When the city manager finds that a user has violated or continues to violate this article, industrial pretreatment user permits or, orders issued hereunder, or any other pretreatment standard or requirement, he may issue an order to the industrial user responsible for the discharge directing that the user come into compliance within thirty (30) days. If the user does not come into compliance within thirty (30) days, sewer service shall be discontinued unless adequate treatment facilities, devices, or other related appurtenances are installed and properly operated. Compliance orders may also contain other requirements to address the noncompliance, including additional self-monitoring, and management practices designed to minimize the amount of pollutants discharged to the sewer. A compliance order may not extend the deadline for compliance established for a federal pretreatment standard or requirement, nor does a compliance order release the user of liability for any violation, including any continuing violation. Issuance of a compliance order shall not be a prerequisite to taking other action against the user.

(e) *Cease and desist orders.* When the city manager finds that a user is violating this article, the user's industrial pretreatment user permit, any order issued hereunder, or any other pretreatment standard or requirement, or that the user's past violations are likely to recur, the city manager may issue an order to the user directing it to cease and desist all such violations and directing the user to:

(1) Immediately comply with all requirements.

(2) Take such appropriate remedial or preventive action as may be needed to properly address a continuing or threatened violation, including halting operations and/or terminating the discharge.

Issuance of a cease and desist order shall not be a prerequisite to taking any other action against the user.

(f) *Administrative penalty.*

(1) Notwithstanding any other section of this article, any user that is found to have violated the cease and desist order issued by the city manager shall be penalized in an amount not to exceed one thousand dollars ($1,000.00). Such penalties shall be assessed on a per violation, per day basis. In the case of monthly or other long term average discharge limits, penalties shall be assessed for each day during the period of violation.

(2) Unpaid penalties shall, after thirty (30) calendar days, be assessed an additional penalty of ten (10) percent of the unpaid balance and interest shall accrue thereafter at a rate ten (10) percent per month. A lien against the individual user property will be sought for unpaid charges and penalties.

(3) Users desiring to dispute such penalty must file a written request for the city manager to reconsider the penalty along with full payment of the penalty amount within sixty (60) days of being notified of the penalty. Where a request has merit, the city manager shall convene a hearing on the matter within thirty (30) days of receiving the request from the industrial user. In the event the user's appeal is successful, the payment together with any interest accruing thereto shall be returned to the industrial user. The city manager may add the costs of preparing administrative enforcement actions such as notices and orders to the penalty.

(4) Issuance of an administrative penalty shall not be prerequisite for taking any other action against the user.

(g) *Emergency suspensions.* The city manager may immediately suspend a user's discharge (after informal notice to the user) whenever such suspension is necessary in order to stop an actual or threatened discharge which reasonably appears to present or cause an imminent or substantial endangerment to the health or welfare of persons. The city manager may also immediately suspend a user's discharge (after notice and opportunity to respond) that threatens to interfere with the operation of the POTW, or which presents or may present an endangerment to the environment.

(1) Any user notified of a suspension of its discharge shall immediately stop or eliminate its contribution. In the event of a user's failure to immediately comply voluntarily with the suspension order, the city manager shall take such steps as deemed necessary, including immediate severance of the sewer connection, to prevent or minimize damage to the POTW, its receiving stream, or endangerment to any individuals. The city manager shall allow the user to recommence its discharge when the user has demonstrated to the satisfaction of the city that the period of endangerment has passed, unless the termination proceedings set forth in section 29-13(h) are initiated against the user.

(2) A user is responsible, in whole or in part, for any discharge presenting imminent endangerment shall submit a detailed written statement describing the causes of the harmful contribution and the measures taken to prevent any future occurrence to the city manager, prior to the date of any show cause or termination hearing under section 29-13(c) and (h).

Nothing in this section shall be interpreted as requiring a hearing prior to any emergency suspension under this section.

(h) *Termination of discharge.* In addition to those provisions in section 29-8(f) of this article, any user that violates the following conditions of this article, industrial pretreatment user permits, or orders issued hereunder, is subject to discharge termination.

(1) Violation of industrial pretreatment user permit conditions.

(2) Failure to accurately report the wastewater constituents and characteristics of its discharge.

(3) Failure to report significant changes in operations or wastewater volume, constituents and characteristics prior to discharge.

(4) Refusal of reasonable access to the user's premises for the purpose of inspection, monitoring or sampling.

(5) Violation of the pretreatment standards in section 29-4 of this article.

Such user will be notified of the proposed termination of its discharge and be offered an opportunity to show cause under section 29-13(c) of this article why the proposed action should not be taken.

(Ord. No. 4255, art. 1, 8-15-11)

## Sec. 29-14. Judicial enforcement; remedies.

(a) *Injunctive relief.* Whenever a user has violated a pretreatment standard or requirement or continues to violate the provisions of this article, industrial pretreatment user permits or orders issued hereunder, or any other pretreatment requirement, the city manager may petition the appropriate court through the city's attorney for the issuance of a temporary or permanent injunction, as appropriate, which restrains or compels the specific performance of the industrial pretreatment user permit, order or other requirement imposed by this article on activities of the industrial user. Such other action as appropriate for legal and/or equitable relief may also be sought by the city. A petition for injunctive relief need not be filed as a prerequisite to taking any other action against a user.

(b) *Civil penalties.*

(1) Any user which has violated or continues to violate this article, any order or industrial pretreatment user permit hereunder, or any other pretreatment standard or requirement shall be liable to the city manager for a maximum penalty of five hundred dollars ($500.00) per violation per day. In the case of monthly or other long-term average discharge limits, penalties shall accrue for each day during the period of the violation.

(2) The city manager may recover reasonable attorney's fees, court costs, and other expenses associated with enforcement activities, including sampling and monitoring expenses, and the cost of any actual damages incurred by the city.

(3) In determining the amount of civil liability, the court shall take into account all relevant circumstances, including, but not limited to, the extent of harm caused by the violation, the magnitude and duration, any economic benefit gained through the user's violation, corrective actions by the user, the compliance history of the user, and any other factor as justice requires.

(4) Filing a suit for civil penalties shall not be a prerequisite for taking any other action against a user.

(c) *Criminal prosecution.*

(1) Any user that willfully or negligently violates any provision of this article, any orders or industrial pretreatment user permits issued hereunder, or any other pretreatment requirement shall, upon conviction, be guilty of a misdemeanor, punishable by penalty of not more than five hundred

dollars ($500.00) per violation per day or imprisonment for not more than three (3) months or both.

(2) Any user that willfully or negligently introduces any substance into the POTW which causes personal injury or property damage shall, upon conviction, be guilty of a misdemeanor and be subject to a penalty of at least five hundred dollars ($500.00) and/or be subject to imprisonment for three (3) months. This penalty shall be in addition to any other cause of action for personal injury or property damage available under state law.

(3) Any user knowingly makes any false statements, representations, or certification in any application, record, report, plan or other documentation filed, or required to be maintained, pursuant to this article, industrial pretreatment user permit or order, or who falsifies, tampers with or knowingly renders inaccurate any monitoring device or method required under this article shall, upon conviction, be punished by a penalty of not more than five hundred dollars ($500.00) per violation per day or imprisonment for not more than three (3) months or both.

(d) *Remedies nonexclusive.* The provisions in sections 29-12 through 29-15 are not exclusive remedies. The city reserves the right to take any, all, or any combination of these actions against a noncompliant user. Enforcement of pretreatment violations will generally be in accordance with the city's enforcement response plan. However, the city reserves the right to take other action against any user when circumstances warrant. Further, the city is empowered to take more than one (1) enforcement action against any noncompliant user. These actions may be taken concurrently.

(Ord. No. 4255, art. 1, 8-15-11)

## Sec. 29-15. Supplemental enforcement action.

(a) *Liability insurance.* The city manager may decline to reissue an industrial pretreatment user permit to any user which has failed to comply with the provisions of this article, any order, or a previous industrial pretreatment user permit issued hereunder, unless the user first submits proof that it has obtained financial assurances sufficient to restore or repair damage to the POTW caused by this discharge.

(b) *Water supply severance.* Whenever a user has violated or continues to violate the provisions of this article, orders, or industrial pretreatment user permits issued hereunder, water service to the user may be severed. Service will only recommence, at the user's expense, after it has satisfactorily demonstrated its ability to comply.

(c) *Public nuisances.* Any violation of this article, industrial pretreatment user permits, or orders issued hereunder, is hereby declared a public nuisance and shall be corrected or abated as directed by the city manager. Any person(s) creating a public nuisance shall be subject to the provisions of the City Code governing such nuisances, including reimbursing the city for any costs incurred in removing, abating or remedying said nuisance.

(Ord. No. 4255, art. 1, 8-15-11)

## Sec. 29-16. Affirmative defenses to discharge violations.

(a) *Upset.*

(1) For the purpose of this section, "upset" means an exceptional incident in which there is unintentional and temporary noncompliance with categorical pretreatment standards because of factors beyond the reasonable control of the industrial user. An upset does not include noncompliance to the extent caused by operational error, improperly designed treatment

facilities, inadequate treatment facilities, lack of preventive maintenance, or careless or improper operation.

(2) An upset shall constitute an affirmative defense to an action brought for noncompliance with categorical pretreatment standards if the requirements of subsection (3) are met.

(3) An industrial user who wishes to establish the affirmative defense of upset shall demonstrate, through signed, contemporaneous operating logs, or other relevant evidence that:

a. An upset occurred and the industrial user can identify the cause(s) of the upset;

b. The facility was at the time being operated in a prudent and workmanlike manner and in compliance with applicable operation and maintenance procedures;

c. The industrial user submitted the following information to the POTW and treatment plant operator within twenty-four (24) hours of becoming aware of the upset, if this information is provided orally, a written submission must be provided within five (5) days:

1. A description of the indirect discharge and cause of noncompliance.

2. The period of noncompliance, including exact dates and times or, if not corrected, the anticipated time the noncompliance is expected to continue.

3. Steps being taken and/or planned to reduce, eliminate and prevent recurrence of the noncompliance.

4. In any enforcement proceeding, the industrial user seeking to establish the occurrence of an upset shall have the burden of proof.

5. Industrial users will have the opportunity for a judicial determination on any claim of upset in an enforcement action brought for noncompliance with categorical pretreatment standards.

6. The industrial user shall control production or all discharges to the extent necessary to maintain compliance with categorical pretreatment standards upon reduction, loss, or failure of its treatment facility until the facility is restored or an alternative method of treatment is provided. The requirement applies in the situation where, among other things, the primary source of power of the treatment facility is reduced, lost or fails.

(b) *General/specific prohibitions.* An industrial user shall have an affirmative defense to an enforcement action brought against it for noncompliance with the general and specific prohibitions in section 29-4(a) of this article if it can prove that it did not know or have reason to know that its discharge, along or in conjunction with discharge from other sources, would cause pass through or interference and that either:

(1) A local limit exists for each pollutant discharged and the industrial user was in compliance with each limit directly prior to, and during the pass through or interference, or

(2) No local limit exists, but the discharge did not change substantially in nature or constituents from the user's prior discharge when the city was regularly in compliance with its NPDES permit, and in the case of interference, was in compliance with applicable sludge use or disposal requirements.

(c) *Bypass.*

(1) An industrial user may allow any bypass to occur which does not cause pretreatment standards or requirements to be violated, but only if it also is for essential maintenance to assure efficient operation. These bypasses are not subject to the provisions of subsections (2) and (3) of this section.

a. If an industrial user knows in advance of the need for a bypass, it shall submit prior notice to the POTW, at least ten (10) days before the date of the bypass if possible.

b. An industrial user shall submit oral notice of an unanticipated bypass that exceeds applicable pretreatment standards to the POTW within twenty-four (24) hours from the time it became aware of the bypass. A written submission shall also be provided with five (5) days of the time the industrial user becomes aware of the bypass. The written submission shall contain a description of the bypass, including exact dates and times, and, if the bypass has not been corrected, the anticipated time it is expected to continue; and steps taken or planned to reduce, eliminate, and prevent reoccurrence of the bypass. The POTW may waive the written report on a case-by-case basis if the oral report has been received within twenty-four (24) hours.

(2) Bypass is prohibited, and the POTW may take enforcement action against an industrial user for a bypass, unless:

a. Bypass was unavoidable to prevent loss of life, personal injury, or severe property damage;

b. There were no feasible alternatives to the bypass, such as the use of auxiliary treatment facilities, retention of untreated wastes, or maintenance during normal periods of equipment downtime. This condition is not satisfied if adequate back-up equipment should have been installed in the exercise of reasonable engineering judgment to prevent a bypass which occurred during normal periods of equipment downtime or preventive maintenance; and

c. The industrial user submitted notices as required under subsection (2) of this section.

(3) The POTW may approve an anticipated bypass, after considering its adverse effects, if the POTW determines that it will meet the three (3) conditions listed in subsection (3)a. of this section.

(Ord. No. 4255, art. 1, 8-15-11)

## Sec. 29-17. Miscellaneous provisions.

(a) *Pretreatment charges and fees.* The city may adopt reasonable charges and fees for the reimbursement of costs of setting up and operating the city's industrial pretreatment program.

(1) Fees for industrial pretreatment user permit applications including the cost of processing such applications.

(2) Fees for monitoring, inspection, and surveillance procedures including the costs of collection and analyzing an industrial user's discharge, and reviewing monitoring reports submitted by industrial users.

(3) Fees for reviewing and responding to accidental discharge procedures and construction.

(4) Fees for filing appeals.

(5) Fees for dumping hauled septage and industrial waste.

(6) Other fees as the city may deem necessary to carry out the requirements contained herein. These fees relate solely to the matters covered by this article and are separate from all other fees, and penalties chargeable by the city.

DIVISION 1. GENERALLY

(b) *Severability.* If any provision of this article is invalidated by any court of competent jurisdiction, the remaining provisions shall not be affected and shall continue in full force and effect.

(c) *Conflicts.* All other ordinances and parts of other ordinances inconsistent or conflicting with any part of this article, are hereby repealed to the extent of the inconsistency or conflict.

(Ord. No. 4255, art. 1, 8-15-11)

## *DIVISION 2. PRIVATE SERVICE LINES AND CONNECTIONS*

Sec. 29-18. Connections to surface water, groundwater sources prohibited.

Sec. 29-19. Duty of owner to connect to public sewer; time limitation.

Sec. 29-20. Penalty for violation of provisions.

### Sec. 29-18. Connections to surface water, groundwater sources prohibited.

(a) Connections to sanitary sewers which terminate in basements of uncompleted buildings shall be tightly stopped so as to prevent the entrance of surface water into the sanitary sewer. Uncovered basements collecting rainwater, or water from other sources, must be dewatered by the pumping of same. In no event may such water enter a sanitary sewer.

(b) Existing sewer connections to sanitary sewers, which carry water from roof drains, yard drains and uncovered areaways, shall be so altered as to permit the passage of sanitary sewage only. Roof drains shall be arranged to discharge on the surface of the ground a minimum of four (4) feet behind the right-of-way line.

(c) No person shall make connection of roof downspouts, exterior foundation drains areaway drains or other sources of surface runoff or groundwater to a building service line or building drain which in turn is connected directly or indirectly to a public sanitary sewer.

(Ord. No. 4255, art. 1, 8-15-11)

### Sec. 29-19. Duty of owner to connect to public sewer; time limitation.

Where sanitary sewers exist, or are constructed in the city, it shall be the duty of the owner of the property to connect same to the public sewer at his expense, provided such public sewer is within two hundred (200) feet of the property line. Such connection shall be made within ninety (90) days after date of official notice from city manager.

(Ord. No. 4255, art. 1, 8-15-11)

### Sec. 29-20. Penalty for violation of provisions.

Any owner mentioned above, who shall violate any of the provisions of this article, shall be deemed guilty of a misdemeanor, and upon conviction shall be punished as prescribed in section 1-8 of this Code.

(Ord. No. 4255, art. 1, 8-15-11)

## *DIVISION 3. USE OF PUBLIC SEWERS*

Sec. 29-21. Unlawful to discharge stormwater, surface water, etc., into sanitary sewer.

Sec. 29-22. Procedure for discharge of stormwater, unpolluted drainage, industrial cooling water.

Sec. 29-23. Unlawful to deposit any waste, other objectionable material upon public, private premises.

Sec. 29-24. Unlawful to discharge sewage, other polluted waters.

Sec. 29-25. Unlawful to construct, maintain privy, cesspool, etc., for disposal of sewage.

Sec. 29-26. Duty of owners to install toilet facilities.

Sec. 29-27. Control manholes; maintenance and operation.

Sec. 29-28. Use of grease and sand interceptors.

### Sec. 29-21. Unlawful to discharge stormwater, surface water, etc., into sanitary sewer.

No person shall discharge or cause to be discharged any stormwater, surface water, groundwater, roof runoff, subsurface drainage, uncontaminated cooling water or unpolluted industrial process waters to any sanitary sewer.

(Ord. No. 4255, art. 1, 8-15-11)

### Sec. 29-22. Procedure for discharge of stormwater, unpolluted drainage, industrial cooling water.

Stormwater and all other unpolluted drainage shall be discharged to such sewers as are specifically designated as storm sewers, or to a natural outlet approved by the city manager. Industrial cooling water or unpolluted process waters may be discharged, on approval of the city manager, to a storm sewer, or natural outlet.

(Ord. No. 4255, art. 1, 8-15-11)

### Sec. 29-23. Unlawful to deposit any waste, other objectionable material upon public, private premises.

It shall be unlawful for any person to place, deposit or permit to be deposited in any unsanitary manner on public or private property within the city or in any area under the jurisdiction of the city, any human or animal excrement, garbage or other objectionable waste.

(Ord. No. 4255, art. 1, 8-15-11)

### Sec. 29-24. Unlawful to discharge sewage, other polluted waters.

It shall be unlawful to discharge to any natural outlet within the city, or in any area under the jurisdiction of the city, any sewage or other polluted waters, except where suitable treatment has been provided in accordance with subsequent provisions of this article.

(Ord. No. 4255, art. 1, 8-15-11)

### Sec. 29-25. Unlawful to construct, maintain privy, cesspool, etc., for disposal of sewage.

Except as otherwise provided in this article, it shall be unlawful to construct or maintain any privy, privy vault, septic tank, cesspool or other facility intended or used for the disposal of sewage.

(Ord. No. 4255, art. 1, 8-15-11)

### Sec. 29-26. Duty of owners to install toilet facilities.

(a) Except as set forth in subsection (b) herein, the owner of all houses, buildings or properties used for human occupancy, employment, recreation or other purposes, situated within the city and abutting on any street, alley or right-of-way in which there is now located or may in the future be located a public sanitary sewer of the city, is hereby required at his expense to install suitable toilet facilities therein, and to connect such facilities directly with the proper public sewer in accordance with the provisions of this article, within ninety (90) days after date of official notice to do so, provided that the public sewer is within two hundred (200) feet of the property line.

(b) The requirements contained in subsection (a) of this section shall not apply to private sewage disposal systems or septic tanks in existence prior to January 31, 2003, unless that private system or septic tank ceases to function or becomes a health hazard or nuisance as defined by applicable law.

(Ord. No. 4255, art. 1, 8-15-11)

### Sec. 29-27. Control manholes; maintenance and operation.

The owner of any commercial or industrial property serviced by a building sewer shall install a suitable control manhole together with such necessary meters and other appurtenances in the building sewer to facilitate observation, sampling and measurement of the wastes. Such manhole shall be accessibly and safely located, and shall be constructed in accordance with plans approved by the city manager. The manhole shall be installed by the owner at his expense, and shall be maintained by him so as to be safe and accessible at all times.

(Ord. No. 4255, art. 1, 8-15-11)

### Sec. 29-28. Use of grease and sand interceptors.

Grease, oil and sand interceptors shall be provided when, in the opinion of the city manager, they are necessary for the proper handling of liquid wastes containing grease in excessive amounts, or any flammable wastes, sand or other harmful ingredients; except that such interceptors shall not be required for private living quarters or dwelling units. All interceptors shall meet the requirements set forth in section 29-5.

(Ord. No. 4255, art. 1, 8-15-11)

## *DIVISION 4. ACCOUNTS AND BILLING*

Sec. 29-29. Classification of users.

Sec. 29-30. Sewer service charges.

Sec. 29-31. Determination of amount of use.

Sec. 29-32. Determination of extra strength.

Sec. 29-33. Review of user charge rate structure.

Sec. 29-34. Billing; payment; delinquency; penalty.

Sec. 29-35. Disconnection.

Sec. 29-36. Owners and occupants jointly liable; authority of city to sue.

Sec. 29-37. Septic tank users.

Sec. 29-38. Notification.

Sec. 29-39. Use of funds.

Sec. 29-40. Unlawful to tamper.

Sec. 29-41. Failure to pay sewer service charge.

### Sec. 29-29. Classification of users.

(a) Users of the sewage system are hereby classified in the following manner:

(1) *Residential.* Residential users of any structure which is used exclusively as a dwelling. Users of a portion of a structure which portion is separately metered for water use and is used exclusively as a dwelling are also classified as residential users. Residential users shall not include the users of hotels, motels, boardinghouses, nursing homes or residence halls.

(2) *Commercial and industrial.* Commercial and industrial users are all users of the system other than residential users.

(3) *Temporary construction.* Temporary construction users are construction site users during construction and prior to occupancy of new residential structures or new commercial and industrial structures or buildings. Temporary construction users are not users for construction projects located at, or additions made to, any existing structure or building.

(b) Revenue received from sewage service charges shall be accounted for according to the above user classifications.

(Ord. No. 4255, art. 1, 8-15-11; Ord. No. 4345, art. 1, 8-6-12)

### Sec. 29-30. Sewer service charges.

(a) *Levied.* There is hereby levied on each sewage system user having any sewer connection with the sewage system of the city or otherwise discharging sewage, industrial waste, or other liquids, either directly or indirectly into the city's sewage system, a sewage service charge. Subject to the

exceptions provided in this chapter, such charge shall be based upon the quantity of water used in or on the premises as the same is measured by a water or sewage meter or meters approved by the city. Additional charges for extra strength sewage, toxic pollutants, and wastewater monitoring will be levied where applicable.

(b) *Basic sewer service charge.* Each user of the sewage system of the city shall pay for the use of such system based on the following schedule of rates:

| | User Charge Portion | Capital Charge Portion | Total |
|---|---|---|---|
| Service Charge: | $3.32 monthly bill | $8.87 monthly bill | $12.19 monthly bill |
| Quantity Charge: All Volume | $2.59/Ccf | $0.41/Ccf | $3.00/Ccf |

(1) Quantity charges for residential users shall be based on the average monthly water usage during the immediate preceding months of January, February and March. When a residential user does not have a history of water usage for the immediate preceding January, February and March or when a residence is not properly metered, the quantity charge shall be computed on the basis of average water usage for the entire residential class. Charges for commercial and industrial users shall be based on one hundred (100) percent of the monthly metered water used except as otherwise provided in section 29-31

(2) Beginning August 20, 2012, temporary construction users of the sewage system of the city shall pay for the use of such system based on the following schedule of rates:

| | User Charge Portion | Capital Charge Portion | Total |
|---|---|---|---|
| Service Charge: | $3.32 monthly bill | $9.87 monthly bill | $13.19 monthly bill |

(c) *Extra strength charge.* Wastewater discharged to the sewage system from commercial or industrial users shall be subject to an extra strength charge when the BOD or suspended solids concentration exceeds three hundred (300) milligrams per liter (mg/l) by weight. All analyses shall be performed on composite samples collected at no less than hourly intervals over a twenty-four-[hour] period. Extra

strength charges shall be calculated based on one hundred (100) percent of metered water use, except as otherwise provided in section 29-31, in accordance with the following formula:

S = Vs × 0.00624 × [$0.112 (BOD - 300) + $0.090 (SS-300)]

Where:

| | | |
|---|---|---|
| S | = | Surcharge in dollars monthly. |
| Vs | = | Sewage volume in one hundred (100) cubic feet per month. |
| 0.00624 | = | Conversion factor for one hundred (100) cubic feet to million pounds. |
| $0.112 | = | Unit charge for BOD in dollars per pound; of which $0.108 represents the user charge portion and $0.004 represents capital charges. |
| BOD | = | BOD strength index in mg/l by weight. |
| 300 | = | Allowed BOD and suspended solids strengths in mg/l by weight. |
| $0.090 | = | Unit charge for suspended solids in dollars per pound; of which $0.088 represents the user charge portion and $0.002 represents capital charges. |
| SS | = | Suspended solids strength index in mg/l by weight. |

(d) *Monitoring charge.* When regulations as set forth by federal, state and city require monitoring of the waste from a commercial or industrial user whether for strength calculations or for national pollutant discharge elimination system compliance, that user shall pay a monitoring charge. The monitoring charge shall consist of all costs for personnel, material and equipment used to collect and analyze samples from the user's sewage. The exact charge shall be based on actual costs and shall be determined by the city.

(e) *Toxic pollutant charge.* Any user which discharges any toxic pollutants which cause an increase in the cost of managing effluent or sludge from the city's treatment system shall pay for such increased costs.

(Ord. No. 4255, art. 1, 8-15-11; Ord. No. 4345, art. 2, 8-6-12; Ord. No. 4469, art. 1, 6-17-13)

### Sec. 29-31. Determination of amount of use.

(a) The amount of sewage discharged to the sewage system of the city shall be determined by the quantity of water metered to the user. In the case of a single user whose water usage is measured

by several meters, the total water usage for all the meters shall be the basis on which sewer service charges are computed and not on the basis of each separate meter reading. Each person from whose property or premises sewage in any quantity is discharged into the sewage system of the city but whose water usage is not metered, is hereby required to meter, at its source, at their own expense, the quantity of water used, with an appropriate meter to be approved by the city, and to pay a monthly sewer service charge based upon the amount of water thus metered, to be computed in like manner as provided in section 29-30

(b) If a commercial or industrial user desires to establish eligibility for a sewage service volume base of less than one hundred (100) percent of monthly water usage he may at his sole expense:

(1) Install a sewage meter acceptable to the city to measure the volume of liquid actually discharged into the sewage system from his premises. Such meter shall be maintained and calibrated by the user and the readings from the meter shall be taken at least once monthly and shall be provided to the city on a monthly basis. In the event a sewage meter is installed, the rate schedule as set forth in section 29-30 shall be applied to:

a. The volume of sewage entering the sewage system as measured by the meter; or

b. A calculated volume based on the percentage of metered water usage discharged to the sewage system as determined by the historical comparison of water usage and metered sewage.

(2) In lieu of a sewage meter the user may install auxiliary water meter(s) to measure that portion of water used which is diverted from entering the sewage system. In the event an auxiliary water meter is installed the volume of water metered by such meter(s) shall be deducted from the total volume of water usage before the sewer service rate schedule is applied.

(c) No refunds, allowances or reductions from the one hundred (100) percent water use base will be granted commercial or industrial users for any time period prior to approval of a sewage metering or diverted water metering system.

(Ord. No. 4255, art. 1, 8-15-11)

## Sec. 29-32. Determination of extra strength.

(a) The city will perform analyses at intervals no greater than twelve (12) months to determine the strength of sewage discharged by commercial and industrial users who discharge an annual average volume of twenty-five thousand (25,000) gallons or more of sewage per day and whose wastes are subject to extra strength charges. Industrial and commercial users who discharge an average of less than twenty-five thousand (25,000) gallons per day and whose wastes are subject to extra strength charges shall have their wastes analyzed as often as deemed necessary by the city to obtain representative samples.

(b) If any industrial or commercial user chooses not to accept the analytical determination made by the city they may at their sole expense employ an independent laboratory, acceptable to the city, to conduct sampling and analysis of their sewage. The time period and location for the collection of the samples shall be designated by the city. The city and the independent laboratory shall both preside over the collection of the samples and shall equally divide the final composite so that duplicate analyses may be made.

(c) If results of the analyses of the sewage sample made by both the city and the independent laboratory are not comparable, the city may appoint a second independent laboratory to analyze the sewage. The sampling procedures used will be the same as those outlined above. The results of these analyses together with the previous results shall be used to determine the actual extra strength

charges. The fee for the second independent laboratory analysis shall be shared equally between the city and the user.

(d) If any industrial or commercial user improves the quality of their discharged sewage, the city will reevaluate the strength of the sewage if requested to do so by the user. The user will pay an additional monitoring charge for the necessary sampling and analysis.

(e) The city shall have the right to enter into all premises served by the sewage system of the city, for the purpose of inspecting, reading or otherwise examining all meters and appurtenances involved in the recording of water received on the premises or sewage discharged therefrom, or to collect samples for analysis of sewage discharged therefrom. If the city is denied entry to any such premises it may disconnect sewer services for such premises from the city's sewage system.

(Ord. No. 4255, art. 1, 8-15-11)

### Sec. 29-33. Review of user charge rate structure.

The user charge rate schedule shall be reviewed and adjusted, if necessary, at least biennially to:

(1) Maintain the proportional distribution of operation, maintenance and replacement (OM&R) costs among user classes.

(2) Provide adequate revenues to cover OM&R and capital costs.

(Ord. No. 4255, art. 1, 8-15-11)

### Sec. 29-34. Billing; payment; delinquency; penalty.

(a) The city finance director, or such other officer or representative of the city as may be designated from time to time, shall be responsible for calculating the amount of and rendering monthly bills for sewage service. The city shall collect the bills for sewage service.

(b) All service bills shall be due and payable in full fourteen (14) days from the date the bill was rendered and shall be considered delinquent after twenty-one (21) days. If the last day for remittance falls upon a weekend or holiday, or any other day when the offices of the department, regularly used for the payment of customer bills, are not open to the general public, the final payment date shall be extended through to the close of the next business day. The date of payment for remittance through the mail shall be the date on which the department receives the remittance. All accounts which become delinquent shall be charged a ten (10) percent penalty.

(c) The city finance director shall keep a list of all delinquent sewage service accounts. The list shall include a legal description of the real property enjoying the use of the sewage system and the amount of the sewage charge plus penalty remaining unpaid. Delinquent sewage service accounts so listed shall constitute a lien upon the real property so served. The lien shall be enforced and the amounts owing shall be collected in the same manner as delinquent real estate taxes.

(Ord. No. 4255, art. 1, 8-15-11)

### Sec. 29-35. Disconnection.

In the event an account declared delinquent has not been paid in full within three (3) months of the initial due date, the city may disconnect sewer services from such premises from the city's sewer system. The location of the disconnection shall be at the discretion of the city. The sewer may be reconnected to

the city's sewage system by the affected property owner, who shall bear the entire expense of all costs for the reconnection, providing the delinquent account has been paid in full and that the city has been reimbursed in full for all costs borne by the city resulting from disconnecting the sewer.

(Ord. No. 4255, art. 1, 8-15-11)

### Sec. 29-36. Owners and occupants jointly liable; authority of city to sue.

The owners and occupants of individual premises served by the sewage system shall be jointly and severally liable to pay for sewage services to the premises. The city shall have the power to file a civil lawsuit against the owners or occupants or both to recover all sums due and, in addition thereto, a reasonable attorney's fee.

(Ord. No. 4255, art. 1, 8-15-11)

### Sec. 29-37. Septic tank users.

(a) Septic tank users who do not use the sewage system of the city shall not be obligated to pay sewer service charges unless those public sewer services are reasonably available to such septic tank users, in which event such septic tank users shall be liable for sewer service charges.

(b) For purposes of this section, a public sewer shall be deemed to be reasonably available if it is within two hundred (200) feet of the property line of a property served by a private sewage disposal system or septic tank.

(Ord. No. 4255, art. 1, 8-15-11)

### Sec. 29-38. Notification.

All users of the sewage system shall be notified at least annually as to:

(1) The rate schedule in effect.

(2) That part of total charges attributable to user charges for sewage treatment service.

(Ord. No. 4255, art. 1, 8-15-11)

### Sec. 29-39. Use of funds.

The monies received from the collection of the sewer service charge as provided in this article shall be used only for the following purposes:

(1) If there are outstanding sewage system revenue bonds, the moneys received shall be used only in accordance with the provisions of the terms of the ordinance or ordinances authorizing issuance of the bonds.

(2) If there are no outstanding sewage system revenue bonds, the moneys received shall be used only to pay the costs and liabilities incurred in operating, maintaining and replacing the city's sewage collection and treatment facilities and to pay all cost of carrying out the provisions of this article.

(Ord. No. 4255, art. 1, 8-15-11)

DIVISION 4. ACCOUNTS AND BILLING

### Sec. 29-40. Unlawful to tamper.

It shall be unlawful for any person to tamper with any sewer line or to reconnect sewer services when services have been disconnected for nonpayment of a bill for sewer services, unless such bill for sewer services has been paid in full. Such offense shall be punished by a fine not exceeding five hundred dollars ($500.00) or by imprisonment not exceeding three (3) months, or by both such fine and imprisonment.

(Ord. No. 4255, art. 1, 8-15-11)

### Sec. 29-41. Failure to pay sewer service charge.

It shall be unlawful for any user to fail to pay the sewer service charge established in this article and such offense shall be punished by a fine not exceeding five hundred dollars ($500.00).

(Ord. No. 4255, art. 1, 8-15-11)

## *DIVISION 5. PRIVATE SEWAGE DISPOSAL*

Sec. 29-42. When required.

Sec. 29-43. Permit required; application; fee.

Sec. 29-44. Inspection by city manager.

Sec. 29-45. Requirements when public sewer available.

Sec. 29-46. Facilities to be kept sanitary.

Sec. 29-47. Additional requirements of health officer.

Sec. 29-48. Individual sewage disposal systems for homes and other establishments where public sewage systems are not available.

Sec. 29-49. Rules and regulations of the county public health department.

Secs. 29-50—29-59. Reserved.

### Sec. 29-42. When required.

When a public sanitary sewer is not available under the provisions of section 29-45, the building sewer shall be connected to a private sewage disposal system complying with the provisions of this article.

(Ord. No. 4255, art. 1, 8-15-11)

### Sec. 29-43. Permit required; application; fee.

Before commencement of construction of a private sewage disposal system the owner shall first obtain a written permit signed by the city manager. The application for such permit shall be made on a form furnished by the city, which the applicant shall supplement by any plans, specifications, and other information as are deemed necessary by the city manager.

(Ord. No. 4255, art. 1, 8-15-11)

### Sec. 29-44. Inspection by city manager.

A permit for a private sewage disposal system shall not become effective until the installation is completed to the satisfaction of the city manager. He shall be allowed to inspect the work at any stage of construction and, in any event, the applicant for the permit shall notify the city manager when the work is ready for final inspection, and before any underground portions are covered. The inspection shall be made within forty-eight (48) hours of the receipt of notice by the city manager.

(Ord. No. 4255, art. 1, 8-15-11)

DIVISION 5. PRIVATE SEWAGE DISPOSAL

### Sec. 29-45. Requirements when public sewer available.

(a) At such time as a public sewer becomes available to a property served by a private sewage disposal system, a direct connection shall be made to the public sewer in compliance with this article, and any septic tanks, cesspools and similar private sewage disposal facilities shall be abandoned and filled with suitable material.

(b) When a public sewer becomes available, the building sewer shall be connected to such sewer within ninety (90) days after date of official notice to do so and the private sewage disposal system shall be cleaned of sludge and filled with clean bank-run gravel or dirt.

(c) For purposes of this section, a public sewer shall be deemed to be available if it is within two hundred (200) feet of the property line of a property served by a private sewage disposal system or septic tank.

(d) The requirements contained in subsections (a) and (b) of this section shall not apply to private sewage disposal systems or septic tanks in existence prior to January 31, 2003, unless that private system or septic tank ceases to function or becomes a health hazard or nuisance as defined by applicable law.

(Ord. No. 4255, art. 1, 8-15-11)

### Sec. 29-46. Facilities to be kept sanitary.

(a) The owner shall operate and maintain the private sewage disposal facilities in a sanitary manner at all times, at no expense to the city.

(b) Wastewater or septic tank haulers shall not discharge any waste within the corporate boundaries of the city except as permitted by the city manager. All wastewater or septic tank haulers shall, in addition to all other requirements for wastewater and septic tank haulers, apply for a wastewater discharge permit in the manner and form prescribed by the city manager prior to discharging such wastes to the city sewerage system.

(Ord. No. 4255, art. 1, 8-15-11)

### Sec. 29-47. Additional requirements of health officer.

No statement contained in this article shall be construed to interfere with any additional requirements that may be imposed by the health officer.

(Ord. No. 4255, art. 1, 8-15-11)

### Sec. 29-48. Individual sewage disposal systems for homes and other establishments where public sewage systems are not available.

(a) Where public water is available but no public sewage system is available:

(1) The minimum lot size in which a private disposal system may be installed is fifteen thousand (15,000) square feet.

(2) Required lot size with private water system in which a private disposal system may be installed is twenty thousand (20,000) square feet.

(b) For purposes of this section, a public sewage system shall be deemed to be available if it is within two hundred (200) feet of the property line of a property served by a private sewage disposal system or septic tank.

(Ord. No. 4255, art. 1, 8-15-11)

### Sec. 29-49. Rules and regulations of the county public health department.

In addition to the requirements set out in the Code of Ordinances of the City of Cape Girardeau, the construction, modification, repair and location of on-site sewage systems shall also be governed by the rules and regulations of the Cape Girardeau County Public Health Department, including requirements for licenses for installers and permits for discharges of three thousand (3,000) gallons or less per day.

(Ord. No. 4255, art. 1, 8-15-11)

### Secs. 29-50—29-59. Reserved.

## ARTICLE II. WATER DIVISION

DIVISION 1. - GENERALLY

DIVISION 2. - ACCOUNTS AND BILLING

DIVISION 3. - PRIVATE LINES AND CONNECTIONS

DIVISION 4. - USE OF WATER

***DIVISION 1. GENERALLY***

Sec. 29-60. Definitions.

## Sec. 29-60. Definitions.

For the purpose of this article, the following words and terms shall have the meanings respectively ascribed:

*Approved.* Approved by the city manager and "approval" shall mean the city manager's approval.

*City.* The City of Cape Girardeau or the city council of Cape Girardeau.

*City Fee Schedule.* The city fee schedule is established pursuant to the provisions of section 25-114 of the City Code.

*City manager.* The city manager of the city, or his authorized deputy, agent or representative.

*Customer.* The corporation, association, or individual legally using water supplied by the department. A purchaser of utility service.

*Customer's water installation.* All pipes, valves, stops, plumbing or contrivances owned by the customer or property owner and located on such property which are used for the purpose of connecting such installation to the department's water service line, meter, curb stop, or water main, or other part of the distribution system as the case may be.

*Cycle billing.* A system employed which results in the rendition of bills for utility service to various customers on different days of any calendar month.

*Delinquent account.* A bill remaining unpaid by a customer at least twenty-one (21) days from rendition of the bill by the department.

*Department.* The public works department of the City of Cape Girardeau, Missouri.

*Director.* The director of the department of public works for the city, or his authorized representative.

*Discontinuance of service.* A cessation of utility service to a customer not directly requesting termination.

*Distribution system.* That part of the city's water works used to distribute water from points of treatment and storage to the customers served; including mains, valves, fittings, service lines, and other appurtenances.

*Easement.* The land legally designated for the installation and maintenance of utility lines necessary to properly serve the public with utility services.

*Estimated bill.* A bill for utility services calculated using one (1) or more estimated meter readings for the billing period.

*Lot.* A parcel or portion of land in a subdivision, or parcel of land separated from other parcels or portions by description as on a subdivision plat of record, survey map, or by metes and bounds description.

*Meter.* A device installed at each customer's premises for the purpose of measuring the quantity of water used.

## DIVISION 1. GENERALLY

*Plan.* A map of a subdivision showing the location, arrangement and size of lots, streets, easements, and other rights-of-way.

*Property.* A lot, tract, or other parcel of land.

*Property owner.* An individual, corporation or association holding legal title or otherwise having legal control of a property.

*Rendition of bill or notice by the city.* The actual date on which the bill or notice was printed by the city.

*Resale service.* Water service used by the customer for resale to another at a profit or at a cost related to the amount of usage.

*Right-of-way.* A street or roadway dedicated to the city, county or to the State of Missouri.

*Service area.* All of the city limits and any other areas where the department furnished utility service.

*Standard specifications.* The City of Cape Girardeau Standard Specifications and Drawings, as may be amended, on file with the City Clerk.

*Subdivision.* A parcel of land divided into two (2) or more lots or other divisions of land.

*Submeter.* A meter that is used in series with another meter for the purpose of measuring a quantity of water a second time.

*Termination of service.* A cessation of utility service requested by the customer.

*Utility services.* Water, sewage or solid waste collection service, or any combination thereof.

*Water main.* The main lines or pipes, usually located in the right-of-way or easement, and used for supplying water to a number of customers, or an entire area.

*Water service line.* The pipe, valves, fittings, water meter, meter box, and all other fixtures owned by the department and used to connect the customer's water installation to the water main.

*Water works.* All the physical property of the city including wells, pumping plants, pipe lines, distribution lines, buildings, and all other equipment, apparatus and property used for the sole purpose of obtaining, producing, distributing, metering, and delivering water.

(Ord. No. 4255, art. 1, 8-15-11)

## *DIVISION 2. ACCOUNTS AND BILLING*

Sec. 29-61. Application.

Sec. 29-62. Rates.

Sec. 29-63. Service fees.

Sec. 29-64. Billing and payment.

Sec. 29-65. Security deposits.

Sec. 29-66. Discontinuance of service.

Sec. 29-67. Unlawful to tamper.

Sec. 29-68. Failure to pay water service charge.

### Sec. 29-61. Application.

(a) Customers shall apply for utility service at a location designated by the city manager as utilities accounts and billing office by submitting a signed application stating their name and address, social security number, the kind of service requested, and the location to be served, by making the necessary deposits, and paying any required connection fees.

(b) In the event the customer has existing accounts which are delinquent or any other monies are owed the city, no approval of application for new service or transfer of service will be given until all accounts in arrears and required deposits or fees are paid in full.

(c) No transfer of an existing service account to another customer will be approved unless prior balance is addressed or if in the judgment of the city such transfer is requested with the intent of avoiding payment for past service. On any application, the city may require documentation necessary to establish identity, residency and/or date of occupancy.

(d) Any necessary deposits shall be collected at the time of application. No customer shall be refused service due to race, sex, creed, national origin, or age.

(e) If approved, water service shall be provided to the water user with no guarantee of minimum or maximum pressure flow. Further, water service may be interrupted with or without notice to the user due to unforeseen circumstances, mechanical failure, piping failure, maintenance of the system, emergencies and other causes. The city is not responsible for and is indemnified against any damage or loss arising from pressure, flow or service interruption conditions in operation of the system in accordance with applicable regulations.

(Ord. No. 4255, art. 1, 8-15-11)

### Sec. 29-62. Rates.

(a) *General water service.*

*Availability.* This rate schedule is available to any metered customer adjacent to the city's water distribution mains, using standard water service.

*Rate.* The monthly rate for service delivered hereunder shall be the total of:

(1) A customer charge per month for each meter as follows:

| Meter Size(s) (inches) | Monthly Customer Charge (per meter) |
|---|---|
| 5/8 | $ 7.68 |
| ¾ | 11.84 |
| 1 | 15.99 |
| 1½ | 29.93 |
| 2 | 45.73 |
| 3 | 85.66 |
| 4 | 141.37 |

plus,

(2) A commodity charge of:

Bills Rendered Before July 1, 2011

First 60 CCF used per month—$2.222 per CCF.

All over 60 CCF used per month—$1.713 per CCF.

Bills Rendered After July 1, 2011

First 60 CCF used per month—$2.333 per CCF.

All over 60 CCF used per month—$1.798 per CCF.

(b) *Private fire protection service.*

*Availability.* This rate schedule is available to customers adjacent to adequate water distribution mains for private fire protection service.

*Rate.* Private fire protection service rates for all types of private fire protection systems are based on the size of connection of customer's private fire protection service to city's distribution main and shall be charged for as follows:

| Size of Connection | Rate Per Connection |
|---|---|
| | *Effective July 1, 2011* |
| 4 inch or smaller | $9.78 per month |
| 6 inch | 19.58 per month |
| 8 inch | 29.42 per month |

(c) *Industrial water service.*

*Availability.* This rate schedule is available for industrial use only, when separated from standard water service, to any customer adjacent to the department's water mains in the Greater Cape Girardeau Development Corporation Industrial Tract.

*Rate.* The monthly rate for service delivered hereunder shall be the total of:

(1) A customer charge per month for each meter as follows:

| Meter Size(s) (inches) | Monthly Customer Charge (per meter) |
|---|---|
| 5/8 or ¾ | $ 7.45 |
| 1 | 15.52 |
| 1½ | 29.06 |
| 2 | 45.28 |

| | |
|---|---|
| 3 | 83.14 |
| 4 | 137.21 |
| 6 | 286.95 |

plus,

(2) A commodity charge of $0.1439 per CCF for all water used during the billing month.

(Ord. No. 4255, art. 1, 8-15-11)

### Sec. 29-63. Service fees.

A fee of fifteen dollars ($15.00) shall be charged to all accounts when a city employee or agent of the city is dispatched to disconnect water. If the water is reconnected or reinstated during regular office hours, an additional reconnection fee of fifteen dollars ($15.00) shall be charged the account. If reconnection is requested by the customer and made after 5:00 p.m. on regular working days, or on weekends or holidays, the reconnection or reinstitution charge shall be thirty dollars ($30.00).

(Ord. No. 4255, art. 1, 8-15-11)

### Sec. 29-64. Billing and payment.

(a) The city shall render a bill once during each billing period to every customer in accordance with the applicable rate schedule.

(b) The manner of furnishing the statement shall be determined by the city manager, provided each customer is billed in a reasonable manner.

(c) The city may divide the service area into sections, and/or the customers into various classes for the purpose of rendering statements. Such sections or classes may be changed from time to time to meet the operating requirements of the city. Such sections or classes are for the sole purpose of establishing a billing rotation and shall have no affect on the amount or rate of billing.

(d) Each billing statement rendered by the city shall be computed on the actual usage during the billing period except as follows:

(1) The city reserves the right to render a bill based on estimated usage for any of, but not limited to, the following reasons:

a. When extreme weather conditions, emergencies, or work stoppages prevent actual meter readings.

b. When a customer fails to provide safe and/or reasonable access to his premises for the purpose of reading the meter.

c. Should the meter be damaged or tampered with in any manner which may render its reading inaccurate.

(e) All service bills shall be due and payable in full fourteen (14) days from the date the bill was rendered and shall be considered delinquent after twenty-one (21) days. If the last day for remittance falls upon a weekend or holiday, or any other day when the offices of the department, regularly used for the payment of customer bills, are not open to the general public, the final payment date shall be extended through to the close of the next business day. The date of payment for remittance through the mail shall be the date on which the department receives the remittance.

(f) A ten (10) percent delayed payment charge shall be imposed on the current amount due on all delinquent accounts. The delayed payment charge shall be due and payable on the date that the account becomes delinquent.

(g) Payments for utility services shall be credited first to the deposit, then evenly to solid waste, sewer and water services with the most delinquent outstanding balance first.

(h) Whenever a customer shall order his services terminated or otherwise cease to be a customer, all amounts owned by the customer to the city shall immediately become due.

(Ord. No. 4255, art. 1, 8-15-11)

## Sec. 29-65. Security deposits.

(a) Each customer shall be required to make a security deposit, which shall be collected at the time of application, as a condition of new service to all customers.

(1) Customers requesting services to a one-family dwelling or one-family unit of a larger residential building shall deposit an amount equal to twice the total of the city-wide monthly residential averages for the utility services being requested. The required deposit will be rounded to the nearest dollar. Averages shall be computed on the first day of each fiscal year.

(2) The city may also increase security deposits for residential accounts to minimize the city's risks where appropriate.

(3) Persons applying for service who can provide a utility reference showing prior twelve (12) months current on time payments, shall not be required to pay a security deposit except as otherwise provided herein.

(b) In order for customers to obtain service to a commercial establishment or for any use other than single-family residential use, they shall be required to meet one (1) of the following provisions:

(1) Make a deposit based on twice the estimated amount of thirty (30) days' bill for those services requested for new and be adjusted to twice the actual average as necessary. The city may also increase security deposits for commercial accounts to minimize the city's risk where appropriate.

(2) Furnish cash equivalent collateral in the amount of value as described in subsection (b)(1) above.

(c) Service deposits may be transferred or applied to a new residence or business location if a customer moves. Adjustment shall be made if the amount of deposit is inadequate or excessive.

(d) The department may require an additional security deposit as a condition of continued service if, in an unauthorized manner, the customer interferes with or diverts the service of the utility situated on or about or delivered to the customer's premises.

(e) No additional security deposit shall be required by the department on the basis of the customer's age, sex, race, creed, or national origin.

(f) In the event all active accounts for a customer have been paid on or before due date for twelve (12) consecutive months and a security deposit was required, the customer may request the deposit amount be credited to the account against utility charges until recovered in full.

(Ord. No. 4255, art. 1, 8-15-11)

## Sec. 29-66. Discontinuance of service.

(a) No person, except authorized employees or agents of the city, shall disconnect any meter, connect to any meter, or disturb the service lines of any utility without written authorized permission. In the event the city shall discover evidence of tampering with any water meter, or lines used for water distribution, sewage collection, or other such line of the utility having the probable effect of rendering actual meter readings inaccurate, or to receive the service of the utility without proper payments, the city shall have the right to disconnect utility service to the customer and remove its property from the customer's premises. In addition, the city manager may cause service to be disconnected due to:

(1) Violation of health codes (per recommendation of the county health department);

(2) Request of fire department due to fires or fire danger;

(3) Request from building inspector because of unsafe condition of structure or dwelling;

(b) The city may determine to continue service or to reconnect service upon compliance with city codes and/or payment by the customer whose demand, use or bill was affected by such tampering, of the following, or any combination thereof, fees or charges at the city's election as determined by the city:

(1) The amount of any city revenue loss attributable to such tampering, with such amount of loss determined by an estimate made by the city manager;

(2) Cash deposit as determined by the city manager or his/her designee; provided, however, that requests for such deposits shall be made only in the event that the customer does not currently have on file with the city a cash deposit in an appropriate amount; and

(3) The actual expenses incurred by the city in replacing and/or repairing the meter, service lines, the making of any connection or disconnection and any bookkeeping and clerical expenses incurred in the preparation of the required billing.

(c) Prior to any service disconnection for nonpayment, the city shall give a minimum of five (5) working days' written notice of such intent by mail to the customer at his billing address. Notices will be generated for the total amount delinquent for all prior billing periods if the customer has a delinquent amount greater than fifteen dollars ($15.00) and any portion is twenty-eight (28) or more days delinquent with the exception of security deposits. Such notice shall give a telephone number and address at which such discontinuance may be appealed. Any person, aggrieved by a decision of the finance department to cut off water service per city ordinance, shall have the right to submit a written request to the city manager appealing that decision at any time up to but no later than two (2) weeks after the cutoff date. However, the delinquent balance plus any applicable fees and deposits must be paid to have service restored on accounts that have an appeal pending. Items that will be considered in the appeal are payment history, size of the delinquency, or unique circumstances. Customers will be notified of the outcome of their appeals within fourteen (14) days of the appeal.

The city may discontinue service to customers for any of the following reasons:

(1) Nonpayment of a delinquent account with a delinquent balance greater than fifteen dollars ($15.00).

(2) Failure to post required security deposit.

(3) Failure to comply with the terms and conditions of a settlement agreement relating to a current or prior utility account.

(4) Refusal to grant access at reasonable times to equipment installed upon the premises of the customer for the purpose of inspection, meter reading, maintenance, replacement, shutoff or removal.

(d) If a customer fails to inform the department of his intent to terminate utility services, or fails to respond to a delinquent notice, services may be discontinued and that customer's service deposits utilized as payment of any delinquent accounts. Any portion of the service deposits remaining after all amounts owed for any service have been deducted and if no claim is filed after a period of ninety (90) days has elapsed, shall be forfeited by the customer and deposited in the applicable utility service fund.

(Ord. No. 4255, art. 1, 8-15-11)

### Sec. 29-67. Unlawful to tamper.

It shall be unlawful for any person to tamper with any water line or to reconnect water services that have been disconnected for nonpayment of a bill for water services, unless such bill for water services has been paid in full. Such offense shall be punished by a fine not exceeding five hundred dollars ($500.00) or by imprisonment not exceeding three (3) months, or by both such fine and imprisonment.

(Ord. No. 4255, art. 1, 8-15-11)

### Sec. 29-68. Failure to pay water service charge.

It shall be unlawful for any user to fail to pay the water service charge established in this article and such offense shall be punished by a fine not exceeding five hundred dollars ($500.00).

(Ord. No. 4255, art. 1, 8-15-11)

## *DIVISION 3. PRIVATE LINES AND CONNECTIONS*

Sec. 29-69. Water service lines—Ownership; application; fees.

Sec. 29-70. Same—Location.

Sec. 29-71. Metering.

Sec. 29-72. Testing and nonregistration of water meter.

Sec. 29-73. Customer's water installation.

Sec. 29-74. Cross-connection control.

Sec. 29-75. Fire hydrants, regulations for use.

Sec. 29-76. Sprinkler system uses.

### Sec. 29-69. Water service lines—Ownership; application; fees.

(a) Water service lines, including the water main tap, the pipe, fittings, and valves between the main and the customer's water installation, the water meter, its appurtenances and the meter box shall be remain the property of the department, which shall be responsible for their perpetual maintenance.

(b) Application for a water service line shall be simultaneous with application for water service to previously unserved properties and shall be accompanied with the normal service deposit as well as any connection or tapping fees. It shall be understood that the service will be placed into immediate use, and billing shall be started at the completion of the current or next full cycle after the connection.

(c) Water service lines to previously unserved properties or to properties previously served by an inadequate or combined service line shall be installed by the department from the water main to the customer's property line upon application and only after all requirements for water main extension and payment have been met. At the time service is available at the property line, the customer shall connect within sixty (60) days. Such installation shall include the pipe, fittings, valves, meter riser, meter box and all related appurtenances, as well as preparation of the main for water tap along with associated work such as excavation, backfill, permits, removal, repair and maintenance of paving on surface.

(d) The customer shall be responsible for installation and maintenance of the customer's water installation from the property line regardless of meter location. All such installation shall be performed by a licensed plumber and shall be subject to standards specifications. The customer's water installation shall be subject to inspection and approved by the city.

(e) Only department personnel shall be permitted to make service taps on the main except as otherwise specifically approved in writing by the department.

(f) Water service lines to previously unserved properties or to properties previously served by an inadequate, combined or noncity owned service line shall be subject to payment of connection and tapping fees as provided for in this section, or otherwise approved by the city manager. The required fees for tapping and water line installation to the property line shall be as follows and shall be paid at the time of application. The city may demand payment in cash.

(1) *Tapping fee (applies to all customer connections):* For all pipe sizes, the fee shall be the actual cost of materials, including the meter box, riser, and the meter, plus twenty (20) percent of the

material cost for overhead. A schedule of such costs for different size lines shall be established by the department each year.

The customer shall provide, subject to approval by city manager, the meter vault for meters having inlet and outlet openings larger than two (2) inches in diameter per standards specifications.

(2) *Meter box and appurtenance fee:* On properties (generally industrial, commercial, or multiple-family residential in use) served by private water mains and/or private water service lines, where multiple water meters are required and the meter boxes and appurtenances are to be installed by a plumbing, mechanical, or general contractor, the meter boxes, meters, and appurtenances shall be furnished by the department and the customer shall be assessed at the actual cost of materials plus twenty (20) percent of the material cost for overhead.

The department may, at its option, provide single or double meter settings per meter box, with no adjustment to the meter box and appurtenance fee.

(g) In addition to the herein-stated tapping fee, each new customer who requests and receives a water service connection to a water main which was installed by the department, or at the expense of the department, shall pay a connection fee as established in the city fee schedule.

(h) Water service lines to previously unserved properties outside the city limits shall be installed by the department upon application and payment of the tapping charge and connection fee, if applicable, but only after all requirements for water main extension and payment have been met, and an agreement concerning voluntary annexation has been executed.

(Ord. No. 4255, art. 1, 8-15-11)

## Sec. 29-70. Same—Location.

(a) The location of the water service line, in relation to the water main and the property to be served, shall be determined by the department.

(b) A permanent meter box shall be installed at the customer's property line in a location determined by the department. The meter box shall be installed to match the existing land surface, unless the customer submits a written description plan to the department or installs a surveyor's stake showing final surface elevation.

(c) When it is impractical to install the meter box at the property line, as determined by the city manager, the water meter may be installed elsewhere on the property to be served, provided it is protected from damage or freezing and is readily accessible. Such an installation location does not change maintenance responsibility of the customer's water installation. If a meter is determined by the department to be inaccessible for reading or maintenance, the customer must make provision for its relocation or for a remote reading device as directed by the department and may be charged for costs incurred for such work. If customer landscaping or property improvements render a meter inaccessible, the customer will move such obstructions as directed to the satisfaction of the department. Regardless of its location, the customer shall be responsible for damage to the meter appurtenances, caused by the customer's negligence or failure to properly safeguard and protect such meter and appurtenances from hazards. Such customer or property owner shall be responsible for labor, material, and overhead to complete the work.

(d) The department reserves the right to relocate the water service line or any appurtenance thereof, at its own expense. If the customer desires relocation, or a change in elevation, of the water service

line or any appurtenances thereof, he shall make request to the department and agrees to pay cost of labor, material, and overhead to complete the work.

(Ord. No. 4255, art. 1, 8-15-11)

## Sec. 29-71. Metering.

(a) Each of the following types of facilities shall comprise a metering unit and be metered individually; provided, however, that the owners of a multifamily building or multiunit commercial building shall have the option of installing a single water meter for each building; provided, however, the service account is always maintained under the owners contracted management firm. A copy of the contract may be requested prior to establishment of the account.

*Exception:* When in the determination of the department such metering or choice of metering option where allowed causes undue hardship in reading or maintaining the meter, the department may direct metering requirements.

Apartment.

Boarding or lodging house.

Club; accommodating or assembly-type cooperative house.

Commercial business property; separate meter required for each business.

Dormitory.

Dwelling, one-family.

Dwelling unit in multiple-family building.

Farmstead.

Hotel.

Industrial or manufacturing plant.

Mobile home park.

Motel or tourist court.

The general rule for establishing metering units for any other types of facilities not mentioned above shall be one (1) meter for each family unit used for residential purposes and one (1) meter for each business or industry.

*Exception:* Owners of mobile home parks shall have the option of installing a water meter provided by the department, upon payment of a tapping fee for each installation, on each individual mobile home, provided they install a water main system within the park, which is certified by the city manager as meeting city standard specifications and which is in accordance with chapter 25 of the City Code, and that such water mains along with necessary easements are dedicated to the city.

(b) When requesting water service, the customer may be required to furnish information as to his expected water demand. The department shall then determine the proper type and size of meter to be installed. The department reserves the right to change the meter size at any time in order to

improve registry or flow. All meters having openings two (2) inches in diameter or larger shall be installed with a properly valved meter bypass as a part of the meter installation. In the event the customer's demand or use requires a change in meter size, such change may be requested and if approved, costs for meter changeout will be paid by the customer.

(c) Billing statements for service furnished to multiple-family units through a single meter shall be sent only to the owner or contracted management firm for the property served. In no case will the department send individual statements to tenants of such facilities for their proportionate share of the service furnished.

(Ord. No. 4255, art. 1, 8-15-11)

### Sec. 29-72. Testing and nonregistration of water meter.

(a) The department will schedule each meter to be tested and calibrated against accurate standards. If a meter shall be found inaccurate, it shall be restored to accurate condition or a new meter shall be substituted. Industry standards defined by AWWA specifications will apply to testing.

(b) The customer has the right to request a special meter test at any time. If any test made at the customer's request discloses that the meter is registering correctly, within industry standards (five (5) percent +/-), the customer shall bear the expense of such test. The expense of all other tests shall be borne by the department.

(c) Results of calibrations and tests, when requested by the customer, shall be furnished to the customer. If any meter is found to register outside industry standards, then the readings of that meter, previously taken for billing purposes, shall be corrected according to the percentage of inaccuracy found. Correction shall extend back ninety (90) days previous to the date of meter removal and the customer's bill shall be adjusted, upward or downward as the case may be, for the corrective period.

(d) Should the meter become defective or fail to register correctly, the quantity of water used shall be determined by the amount used during the same period of the preceding year, or the average amount for the three-month period immediately preceding the defective registration.

(Ord. No. 4255, art. 1, 8-15-11)

### Sec. 29-73. Customer's water installation.

(a) The customer's water installation shall extend from:

(1) The property line regardless of meter location.

(2) The water main tap, where an unmetered fire protection or sprinkler system serves the property, or where a private water main is extended from the city water main.

(b) The customer assumes all responsibility for the construction, maintenance, and any necessary relocation of the customer's water installation; he shall make every effort to this system free from leaks. Apparent leaks in the customer's water installation, whether registered on the water meter or not, shall be repaired by the customer within ten (10) days of receipt of written notice by the department. If repairs are not made, the department shall issue written notice of disconnection, and five (5) days thereafter may discontinue water service until the leak is repaired. If the judgment of the department, an apparent leak in the customer's water installation endangers public safety, constitutes a serious nuisance, or wastes a considerable amount of water, the department may

discontinue water service without previous notice to the customer. Hidden leaks in the customer's water installation shall be repaired, after discovery, under the same provisions as apparent leaks.

(Ord. No. 4255, art. 1, 8-15-11)

### Sec. 29-74. Cross-connection control.

(a) *Plumbing code.* Cross-connections shall be controlled as set out in the plumbing code as identified in chapter 7 as adopted and amended by the City of Cape Girardeau.

(b) *Cross-connections prohibited.*

(1) No water service connection shall be installed or maintained to any premises where actual or potential cross-connections to the public potable or customer's water system may exist unless such actual or potential cross-connections are abated or controlled to the satisfaction of the department and as required by the laws and regulations of the Missouri Department of Natural Resources.

(2) No connection shall be installed or maintained whereby an auxiliary water supply may enter a public potable or customer's water system unless such auxiliary water supply and the method of connection and use of such supply shall have been approved by the department and the Missouri Department of Natural Resources.

(3) No water service connection shall be installed or maintained to any premises in which the plumbing system, facilities, and fixtures have not been constructed and installed using acceptable plumbing practices considered by the city as necessary for the protection of health and safety.

(c) *Cross-connection control device testing, surveys and investigations.*

(1) The owner of a cross-connection control device shall test and report results as required under Missouri DNR laws and regulations. The department will monitor testing in compliance with applicable laws.

(2) The customer's premises shall be open at all reasonable times to the city manager for the conduction of surveys and investigations of water use practices within the customer's premises to determine whether there are actual or potential cross connections to the customer water system through which contaminants or pollutants could backflow into the public potable water system.

(3) On request of the city manager, the customer shall furnish information on water use practices within his premises.

(4) It shall be the responsibility of the water customer to conduct periodic surveys of water use practices on his premises to determine whether there are actual or potential cross connections to his water system through which contaminants or pollutants could backflow into his or the public potable water system.

(Ord. No. 4255, art. 1, 8-15-11; Ord. No. 4406, art. 1, 12-17-12)

### Sec. 29-75. Fire hydrants, regulations for use.

(a) *Fire hydrant—Use procedures.* Fire hydrants shall be operated only by the fire department, public works department or its designees or those persons granted temporary authority to operate hydrants by the city in accordance with hydrant regulations. The operation of a city hydrant by any

unauthorized person shall result in impoundment of hoses, wrenches, and nozzles used in the hydrant operation and shall be subject to prosecution by the city. Water may be obtained from hydrants upon the obtainment of a permit from the city and is subject to the following conditions:

(1) Written requests for usage shall be filed with the city at least twenty-four (24) hours in advance of the proposed usage. The request shall state:

a. Name of user.

b. Dates of usages.

c. Location of hydrant.

d. Purpose of water use.

The city reserves the right to deny any request for any reason believed necessary to protect the interests of the city.

(2) Upon approval by the city and the payment of all applicable fees and deposits, the city will install a hydrant assembly for the express purpose of controlling, measuring the water used from fire hydrants and preventing backflow into the system. The user shall see the assembly is used and working during fire hydrant operations. The user may not change location of the assembly to any other hydrant. The department will remove and reinstall the assembly in accordance with the above provisions.

(3) The city will record beginning and ending meter readings for the user. All hydrant meters will be read at least once per month and all bills for hydrant usage are due upon receipt. Nonpayment of bills will result in termination of service and jeopardizes deposit refund.

(4) The water user shall provide all equipment necessary for hydrant water use except the assembly and shall provide hoses or other equipment required. The user shall be totally responsible for any damages done.

(b) *Fire hydrant—Use charges.*

(1) The charges for usage of water from hydrants shall be established in the city fee schedule established by city manager.

(2) Following turn off of the fire hydrant and payment of all applicable charges, and upon inspection of the fire hydrant and meter, and finding them in good condition, remainder of deposit will be returned.

(Ord. No. 4255, art. 1, 8-15-11)

## Sec. 29-76. Sprinkler system uses.

(a) Fire protection sprinkler systems, irrigation sprinkler systems and similar systems are subject to regular and ordinary water use regulations as identified in this article. Both fire protection and irrigation sprinkler systems shall be subject to all backflow prevention requirements set forth by the city and the Missouri Department of Natural Resources. Those systems not in compliance with said requirements shall be subject to disconnection, with no liability incurred by any other entity or person; all liability is assumed by the customer and/or user.

(b) All water mains laid on or within private property for the sole purpose of providing fire protection through fire hydrants or sprinkler systems, are subject to installation of a detector check valve with bypass compound meter, sized as approved by the city. The detector check valve and meter if required, shall be housed in an underground vault, with size and design to be approved by the city.

Water use registered through the meter shall be billed to the customer in accordance with fire protection service rates as established by ordinance.

(c) The customer and/or water user shall promptly report to the city any fires that occur requiring water usage through the fire protection line, and the city will reset the detector check valve at no cost to the customer. In the event routine checks of the detector check valve show that the valve is open and no fire has been reported, the customer shall be subject to a fine up to five hundred dollars ($500.00) for each offense and further water service shall be provided only through totally metered lines, with all costs of metering to be borne by the water user.

(Ord. No. 4255, art. 1, 8-15-11)

## *DIVISION 4. USE OF WATER*

Sec. 29-77. Water conservation plan.

Sec. 29-78. Boil water order.

### Sec. 29-77. Water conservation plan.

(a) *Voluntary curtailment or restrictions.* During times of drought, disasters or other conditions that may or would create a water shortage problem, the city manager, in the best interest of the citizens of Cape Girardeau and the water system, shall request city water customers to voluntary curtail water use. Such requests may be, but are not limited to: voluntary curtailment or restrictions of lawn watering; car washing; filling or refilling of swimming pools; washing of driveways, parking areas and other paved areas; commercial and industrial users to reduce water usage by twenty-five (25) percent and other nonessential uses.

(b) *Mandatory curtailment or restrictions.* If a disaster occurs, severe conditions exist, and/or voluntary water curtailment or restrictions are requested and demands on the water system continue to indicate that the threat of a water shortage will continue or occur, the city or its agents shall immediately implement any parts of the below conservation plan and/or any other action deemed necessary to reduce or curtail water use:

*Mandatory Conservation Plan*

(1) Mandatory restriction of lawn watering: Even-numbered addresses water on even-numbered days of the month, odd-numbered addresses water on odd-numbered days.

(2) Mandatory ban on all lawn watering, watering of gardens, plants and trees is prohibited except from a hand-held container.

(3) Mandatory ban on washing sidewalks, driveways, parking areas, patios and other paved areas.

(4) Mandatory ban on the filling or refilling of swimming pools, and/or washing of cars, other motor vehicles, trailers or boats.

(5) Mandatory ban on water uses from fire hydrants except for fighting fires, flushing mains to alleviate specific complaints and testing or sampling water.

(6) Commercial and industrial users shall reduce water usage by twenty-five (25) percent.

(c) Any violation of mandatory water curtailment or restricted activities may result in service disconnection and/or shut off until the emergency or disaster is past.

(Ord. No. 4255, art. 1, 8-15-11)

### Sec. 29-78. Boil water order.

In the event of any emergency whereby any potential contamination of the system may occur, or as stipulated by regulations of the state department of natural resources, the city manager may issue a "boil water" order to safeguard the general welfare of the system users.

(Ord. No. 4255, art. 1, 8-15-11)

DIVISION 4. USE OF WATER

# Chapter 30 ZONING [1]

ARTICLE 1. - GENERAL PROVISIONS

ARTICLE 2. - ADMINISTRATION, ENFORCEMENT AND REVIEW

ARTICLE 3. - DISTRICT REGULATIONS

ARTICLE 4. - SUPPLEMENTAL DISTRICT REGULATIONS

ARTICLE 5. - RESERVED

---

FOOTNOTE(S):

---

--- (**1**) ---

**Editor's note—** Article 1 of Ord. No. 4109, adopted March 1, 2010, repealed ch. 30 with the exception of §§ 30-38, and 30-41—30-43; article 2 enacted new provisions to read as herein set out; and articles 3—6 renumbered §§ 30-38, and 30-41—30-43 as §§ 30-501—30-504. Former ch. 30 derived from the 1967 Code as amended; see the Code Comparative Table at the back of this volume for the amendatory history. Obvious misspellings and punctuation errors have been corrected without notation. For stylistic purposes, headings and catchlines have been made uniform and the same system of citation to state statutes, and expression of numbers and capitalization in text as appears in the Code of Ordinances has been used. Additions made for clarity are indicated by brackets. (Back)

**Cross reference—** Alcoholic beverages, ch. 5; animals and fowl, ch. 6; buildings, ch. 7; video service regulation, ch. 8; cemeteries, ch. 9; floodplain management regulations, ch. 12; housing, ch. 14; licenses and business regulations, ch. 15; parks and recreation, ch. 18; subdivision regulations, ch. 25; travel trailer camps, mobile homes and mobile home parks, ch. 27; urban redevelopment, ch. 28; community development department, § 2-46; stormwater management system design requirements, § 23-10; location of loading zones, § 26-31. (Back)

**State Law reference—** Zoning and planning, RSMo, Ch. 89. (Back)

## ARTICLE 1. GENERAL PROVISIONS

Sec. 30-101. Authority.

Sec. 30-102. Title.

Sec. 30-103. Purpose.

Sec. 30-104. Interpretation.

Sec. 30-105. Definitions.

### Sec. 30-101. Authority.

This chapter is adopted under the authority granted by RSMo §§ 89.010—89.491.

In enacting this chapter for the zoning and development of land, the city is exercising its constitutional home rule power pursuant to Article VI, Section 19(a) of the Constitution of the State of Missouri, including, but not limited to, the authority granted in article II of the Charter of the City of Cape Girardeau; and all other powers derived from the Constitution and the laws of the State of Missouri, including those powers explicitly granted by and necessarily implied by RSMo Chapter 89.

(Ord. No. 4109, art. 2, 3-1-10)

### Sec. 30-102. Title.

This chapter shall be the official zoning code of the City of Cape Girardeau, Missouri; and shall be known, cited and referenced as the "Zoning Code of the City of Cape Girardeau, Missouri".

(Ord. No. 4109, art. 2, 3-1-10)

### Sec. 30-103. Purpose.

This chapter is adopted in order to regulate and restrict the location and use of buildings, structures, and land for trade, industry, residential or other purposes by dividing the City of Cape Girardeau into residential, commercial, industrial, and other districts, each with their own regulations and restrictions with respect to the use and development of land with the city; to regulate and restrict the height, number of stories, size, bulk of buildings and other structures; to restrict the percentage of a lot that may be occupied by buildings or structures; to require setbacks from highways and streets; to specify the size of yards and open space and the spacing of buildings and structures; to regulate the density of population; to conserve and protect the value and economic use of property within the city; to preserve buildings and structures and features thereof, that have historical significance; and to prevent or ameliorate traffic congestion.

(Ord. No. 4109, art. 2, 3-1-10)

### Sec. 30-104. Interpretation.

The provisions of this chapter shall be held to be minimum requirements adopted to promote the health, safety and general welfare of the city and shall be construed in favor of the city and shall not be deemed a limitation of any power granted by RSMo Chapter 89.

(Ord. No. 4109, art. 2, 3-1-10)

## Sec. 30-105. Definitions.

Words or phrases in this chapter shall be interpreted so as to give them the same meaning as they have in common usage. However, for the purpose of this chapter, the following terms shall have the meanings ascribed to them in this section, except where the context clearly indicates a different meaning:

(1) *Accessory structure.* A detached subordinate building, the use of which is incidental to and customary in connection with the principal building or use and which is located on the same lot with such principal building or use, and which is greater than one hundred fifty (150) square feet in size.

(2) *Accessory use.* A subordinate use which is incidental to and customary in connection with the principal building or use, and is located on the same lot with such principal building or use.

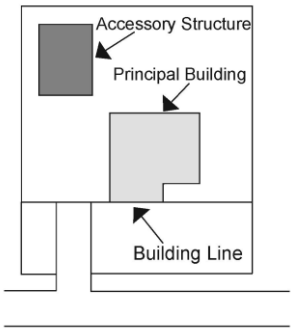


(3) *Agricultural use.* The use of land for agricultural purposes, including farming, dairying, pasturage, agriculture, horticulture, floriculture, viticulture, and animal and poultry husbandry and the necessary accessory uses for packing, treating, or storing the produce; provided, however, that the operation of any such accessory uses shall be secondary to that of normal agricultural activities.

(4) *Alley.* A thoroughfare which affords only a secondary means of access to abutting property.

(5) *Alteration.* Any act or process that changes one (1) or more of the exterior architectural features of a structure, including, but not limited to, the erection, construction, reconstruction, or removal of any structure.

(6) *Animal feeding operation (AFO).* Animal feeding operations (AFO) as defined by Environmental Protection Agency Regulations; includes agricultural operations where animals are kept and raised in confined situations. AFO congregate animals, feed, manure and urine, dead animals, and production operations on a small land area. Feed is brought to the animals rather than the animals grazing or otherwise seeking feed in pastures, fields, or on rangeland.

(7) *Antenna.* Any exterior transmitting or receiving device mounted on a tower, building or structure and used in communications that radiate or capture electromagnetic waves, digital signals, analog signals, radio frequencies (excluding radar signals), wireless telecommunications signals or other communication signals. The term shall exclude any receive-only home television antenna.

(8) *Bed and breakfast.* An owner-occupied dwelling or portion thereof, which contains guest rooms where short-term lodging, with or without meals, is provided for compensation.

(9) *Bedroom.* A sleeping room as defined in section 7-361 of the City Code.

(10) *Board of adjustment.* The board established pursuant to section 30-204 of this chapter.

(11) *Bufferyard.* A landscaped area intended to separate and partially obstruct the view of two (2) adjacent land uses or properties from one another, and to block out noise, lights or other nuisances.

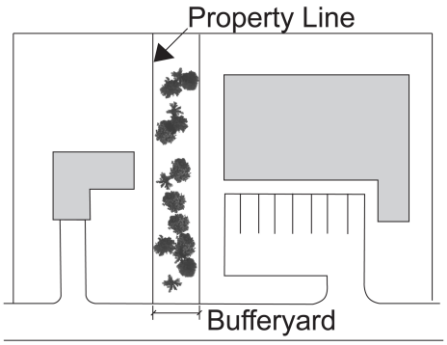


(12) *Building.* Any structure designed or intended for the support, enclosure, shelter, or protection of persons, animals, or property.

(13) *Building coverage.* The horizontal area measured within the exterior walls of the ground floor of all principal and accessory buildings on a lot divided by the gross area of the lot.

(14) *Building, height.* The vertical distance from the average grade to the highest point of the coping of a flat roof or to the deckline of a mansard roof or to the mean height level between eaves and ridge for gable, hip, and gambrel roofs, excluding elevator shafts and equipment.

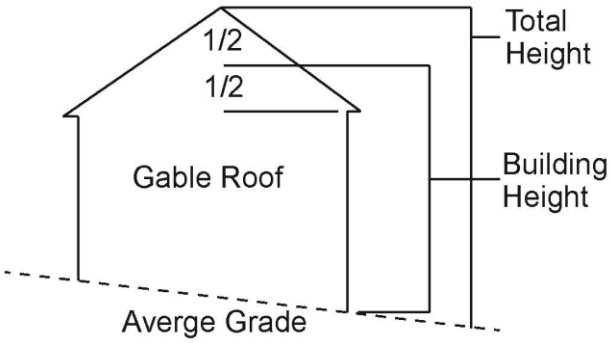


(15) *Canopies.* An independent, ground-supported, roofed structure with totally open sides.

(16) *Carport.* A roofed structure providing space for the parking of vehicles which is open on not less than two (2) sides.

(17) *Certificate of appropriateness.* A certificate issued by the Cape Girardeau Historic Preservation Commission authorizing an alteration, construction, removal or demolition affecting a defined feature described and delimited in the designation of a historic site or district.

(18) *Cluster subdivision.* A development design technique that concentrates buildings in specific areas on a site to allow the remaining land to be used for recreation, common open space, and preservation of environmentally sensitive features.

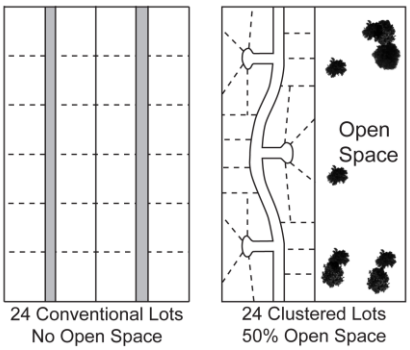


(19) *Concentrated animal feeding operations (CAFO).* Concentrated animal feeding operations (CAFO) as defined by Environmental Protection Agency Regulations.

(20) *Construction.* The act of adding to an existing structure or the erection of a new principal or accessory structure on a lot or property.

(21) *Conversion.* The alteration or adaptive reuse of a structure to accommodate uses for which it was not originally designed or constructed. Examples include, but are not limited to, converting a warehouse into a restaurant, or converting an office building into residential apartments.

(22) *Council.* The city council of the City of Cape Girardeau, Missouri.

(23) *Day care, commercial.* The care for compensation of individuals on a regular basis, for periods of less than twenty-four (24) hours per day, in a place other than the individual's own dwelling unit.

(24) *Day care, home.* A dwelling, occupied as a permanent residence, in which care is given for compensation to individuals unrelated to the residents of the home.

(25) *Demolition.* As it pertains to a landmark or historic district means any act or process which affirmatively destroys, in part or in whole, a landmark or a structure within a historic district, or which affirmatively threatens to destroy a landmark or a structure within a historic district.

(26) *Density.* The number of dwelling units per acre.

(27) *Designation, historic.* The identification and registration of properties that meet the criteria established by the city or the state for the preservation of significant historic and prehistoric resources within the city.

(28) *District.* A section of the city for which the regulations governing the use of buildings and premises, the height of buildings, the size of yards, and the intensity of use are uniform.

(29) *Dock.* The location in the City of Cape Girardeau authorized under RSMo § 313.800 et seq., where an excursion gambling boat moors for the purpose of embarking passengers for and disembarking passengers from a gambling excursion; or where an excursion gambling boat is continuously docked; or where a floating facility for gambling purposes is more or less continuously moored; or where pleasure or fishing boats are moored for any period of time.

(30) *Drive-thru restaurants.* A restaurant where the facilities or services are designed to permit food or beverages to be consumed on the premises outside of the building or in automobiles parked on the premises.

(31) *Duplexes.* See "Dwelling, two-family."

(32) *Dwelling.* Any building or portion thereof which is designed and used exclusively for residential purposes.

(33) *Dwelling, multifamily.* A building having accommodations for and occupied exclusively by more than two (2) families with no more than two (2) unrelated persons per bedroom.

(34) *Dwelling, single-family.* A building having accommodations for and occupied exclusively by one (1) family.

(35) *Dwelling, two-family.* A building having accommodations for and occupied by two (2) families.

(36) *Exterior architectural appearance.* The architectural character and general composition of the exterior of a structure, including, but not limited to, the kind, color and texture of the building material, and the type, design and character of all windows, doors, light fixtures, and signs.

(37) *Excursion gambling boat or floating gambling facility.* A boat, ferry, barge, or similar structure licensed by the Missouri Gaming Commission on which gambling games are allowed.

(38) *Family.*

a. One (1) or more persons related by blood, marriage, adoption or custodial relationship living as a single housekeeping unit, plus up to two (2) domestic servants; or

b. Three (3) or fewer unrelated persons, including any domestic servants, living as a single housekeeping unit; or

c. Two (2) unrelated persons, plus their biological, adopted or foster children or other minors, for whom they have legally established custodial responsibility, plus up to two (2) domestic servants, living as a single housekeeping unit.

The term "family" shall not be construed to mean a fraternity, sorority, club or institutional group.

(39) *Fence.* Any artificially constructed barrier of any material or combination of materials erected to enclose or screen areas of land.

(40) *Floor area ratio (FAR).* The gross floor area of all buildings on a lot divided by the lot area on which the building or buildings are located.

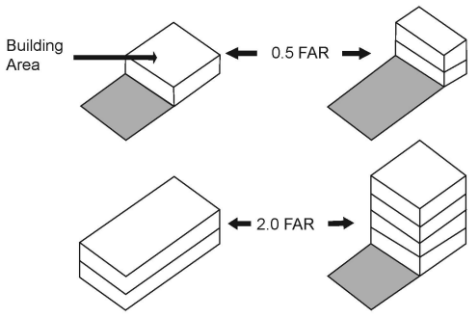


(41) *Frontage.* The lot line that abuts a street right-of-way. The frontage of a lot abutting more than one (1) street shall be calculated separately for each street.

(42) *Gambling excursion.* The time during which gambling games may be operated on an excursion gambling boat or floating facility whether docked or during a cruise.

(43) *Garage, private.* An accessory building or portion of a main building, or part thereof, designed or used for the storage of vehicles owned and used by the occupants of the building.

(44) *Historic district.* An area designated as a "historic district" by ordinance of the city council pursuant to section 30-352 of this chapter.

(45) *Home occupation.* Any activity, whether or not for financial gain, conducted in or directed from a residential dwelling unit by one (1) or more family members residing within that dwelling unit.

(46) *Hotel.* Any structure, or building, under one (1) management, which contains a room or rooms furnished for the accommodation or lodging of guests, with or without meals being provided, and kept, used, maintained, advertised or held out to the public as a place where sleeping accommodations are sought for pay or compensation to transient guests or permanent guests.

(47) *Infill development.* New construction on vacant or underutilized parcels of land, or clearance and redevelopment to replace dilapidated or deteriorated structures.

(48) *Kennel.* An establishment licensed to operate a facility housing dogs, cats, or other household pets and where grooming, breeding, boarding, training, or selling of animals is conducted as a business, or by a not-for-profit organization.

(49) *Landmark, local.* A property or structure designated as a "landmark" by ordinance of the city council, pursuant to section 30-352 of this chapter.

(50) *Loading space.* A space on the lot accessible to an alley or street, not less than ten (10) feet in width, twenty (20) feet in depth and ten (10) feet in height.

(51) *Lot.* a parcel of land occupied or intended for occupancy by a use permitted in this chapter, including the open spaces and parking spaces required by this chapter, and having its principal frontage upon a public or private street.

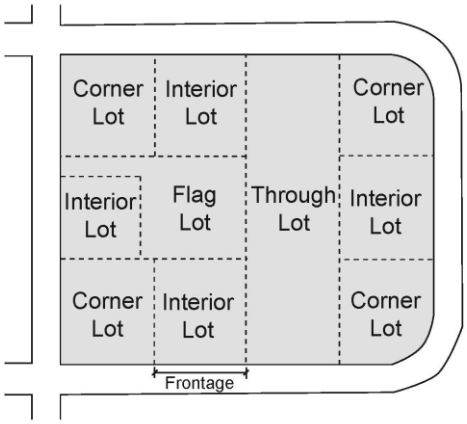


(52) *Lot, corner.* A lot abutting upon two (2) or more streets at their intersection.

(53) *Lot, depth of.* The mean horizontal distance between the front and rear lot lines.

(54) *Lot, interior.* A lot other than a corner lot.

(55) *Lot of record.* A lot which is a part of a subdivision, the map of which was recorded in the office of the county recorder; or a parcel of land, the deed to which was recorded in the office of the county recorder, prior to the original adoption of this ordinance on December 20, 1967.

(56) *Manufactured business unit (mobile business unit).* A factory-built structure or structures which, in the traveling mode, is eight (8) body feet or more in width or forty (40) body feet or more in length, or, when erected on-site, contains three hundred twenty (320) or more square feet, equipped with the necessary service connections and made so as to be readily movable as a unit or units on its or their own running gear and designed to be used for commercial, educational, or industrial purposes with or without a permanent foundation. The phrase "without a permanent foundation" indicates that the support system is constructed with the intent that the manufactured unit placed thereon may be moved from time to time at the convenience of the owner.

Manufactured business units (mobile business units) are those factory-built structures manufactured under the authority of the Federal Manufactured Home Construction and Safety Standards Acts, effective June 15, 1976, and must carry a seal of approval of the U.S. Department of Housing and Urban Development (HUD) as required by the Missouri Public Service Commission.

The term "manufactured business unit" shall also include units defined as above if such units are in two (2) or more separately towable components designed to be joined into one (1) integral unit capable of being again separated into components capable of repeated towing and includes two (2) or more manufactured business units joined into a single business unit which are kept on separate chassis for repeated towing.

(57) *Manufactured home (mobile home).* A factory built structure or structures which, in traveling mode, is eight (8) body feet or more in width or forty (40) body feet in length, or, when erected on-site, contains three hundred twenty (320) or more square feet, equipped with the necessary service connections and made so as to be readily movable as a unit or units on its or their own running gear and designed to be used as a dwelling unit or units with or without a permanent foundation. The phrase "without a permanent foundation" indicates that the support system is constructed with the intent that the manufactured home placed thereon may be moved from time to time at the convenience of the owner.

Manufactured homes (mobile homes) are those factory-built structures manufactured under the authority of the Federal Manufactured Home Construction and Safety Standards Act, effective June 15, 1976, and must carry a seal of approval of the U.S. Department of Housing and Urban Development (HUD) as required by the Missouri Public Service Commission.

The term "manufactured home" shall also include units defined as above if such units are in two (2) or more separately towable components designed to be joined into one (1) integral unit capable of being again separated into the components capable of repeated towing and includes two (2) or more manufactured home units joined into a single residential unit which are kept on separate chassis for repeated towing.

(58) *Manufactured home (mobile home) park.* A parcel of land which has been developed for the placement of more than one (1) manufactured home (mobile home).

(59) *Microbrewery.* A business whose primary activity is the brewing and selling of beer, with an annual production of ten thousand (10,000) barrels or less (one (1) barrel of beer yields two (2) common fifteen and one-half (15½) gallon kegs).

(60) *Nonconforming use.* Any building or land lawfully occupied by a use at the time of passage of this ordinance or amendment thereto, which does not conform after the passage of this chapter or amendment thereto with the use regulations of the district in which it is situated.

(61) *Nursing home, senior citizen housing* or *retirement home.* A home for the aged or infirm in which three (3) or more persons not of the immediate family are received, kept, or provided with food and shelter or care for compensation, but not including hospitals, clinics or similar institutions devoted primarily to the diagnosis and treatment of the sick or injured.

(62) *Office.* A place where business or services for others is transacted, and not a place where goods, wares, or merchandise are commonly created, exchanged or sold.

(63) *Open space.* Any space on a lot that is unobstructed to the sky except for the ordinary projection of cornices and eaves. Open space shall not include areas covered by structures, decks, porches, parking areas, driveways, internal streets and other forms of impervious surface other than sidewalks and trails. Open space may include up to one-half (½) of the space requirement [which] may be in water, floodplain and stormwater detention facilities.

(64) *Owner of record.* The person, corporation or other legal entity listed as owner on the records of the county recorder of deeds.

(65) *Parking lot.* An open surfaced area used exclusively for the temporary storage of motor vehicles.

(66) *Permitted uses.* A use specifically listed as being allowed in a particular zoning classification, or a substantially similar use as determined by the director of development services.

(67) *Porch.* A roofed structure attached to a building and open on two (2) or more sides. A screened-in porch shall not be considered open.

(68) *Pub, brewery.* A bar, tavern, pub, or restaurant-bar wherein beer is brewed on the premises in a microbrewery for sale either on or off the premises.

(69) *Rehabilitation.* Returning structure to a state of usefulness by replacement and alteration designed to encourage its continued usage while preserving exterior features of significant value. Examples include reconstruction of a porch, or removal and replacement of windows and doors.

(70) *Renovation.* Refurbishing a structure so it conforms to minimum standards of sanitation, fire, and life safety, while preserving exterior features of significant value.

(71) *Repair.* Any change that is not construction, removal or alteration.

(72) *Restaurant.* A place of business where prepared food and beverage are sold for consumption within the building or away from the premises.

(73) *Residential treatment facilities.* A facility used for the purpose of providing twenty-four-hour-a-day, residential living accommodations for the purpose of providing assistance for substance abuse, physical abuse, and other life controlling problems.

(74) *Screening.* A device or material used to conceal one (1) element of a development from other elements or from adjacent or contiguous development. Screening may include one (1) or a combination of the following materials of sufficient mass to be opaque or that shall become opaque after twelve (12) months and which shall be maintained in an opaque condition: walls, berms, fences, or plantings.

(75) *Senior citizen.* An individual over the age of sixty (60) years.

(76) *Significant properties.* Are generally those which meet the Secretary of the Interior's standards for evaluating structures within registered historic districts. A structure contributing to the historic significance of a site or district is one that by location, design, setting, materials, workmanship, feeling, and association adds to the site's or district's sense of time and place and historical development. A structure not contributing to the historic significance of a site or district is one that detracts from the site's or district's sense of time and place and historical development; or one where the integrity of the original design or individual architectural features or spaces have been irretrievably lost; or one where physical deterioration or structural damage has made it not reasonably feasible to rehabilitate the building. Ordinarily, structures that have been built within the past fifty (50) years will not be considered unless a strong justification concerning their historical or architectural merit is given or the historical attributes of the district are considered to be less than fifty (50) years old.

(77) *Site, historic.* Any area or location occupied as a residence or utilized by humans for a sufficient length of time to construct features, or deposit a number of artifacts, or any place with evidence of past human activity. Sites include, but are not limited to, occupation, location, work areas, evidence of farming or hunting and gathering, burial remains, artifacts, and structures of all types.

(78) *Site plan.* A drawing illustrating a proposed development and prepared in accordance with the specifications outlined in chapter 25

(79) *Special uses.* A use of land authorized by permission granted pursuant to the procedure set out in section 30-401 or a use not permitted in a particular zoning district unless certain conditions are met.

(80) *Stop work order.* An order issued by the director of development services directing an owner, occupant, contractor or subcontractor to halt an action for which a certificate of appropriateness is required, and notifying the owner, occupant, contractor or subcontractor of the application process for a certificate of appropriateness.

(81) *Story.* That portion of a building included between the surface of any floor and the surface of the floor next above it or, if there be no floor above it, then the space between the floor and the ceiling next above it.

(82) *Story, half.* A space under a sloping roof which has the line of intersection of roof decking and wall face not more than three (3) feet above the top floor level, and in which space not more than sixty (60) percent of the floor area is finished off for use.

(83) *Street.* All property dedicated for public or private street, highway, freeway or roadway purposes or subject to public or private easement therefore.

(84) *Street, arterial.* A street or road of considerable continuity which serves or is intended to serve as principal trafficway between separate areas or districts and which is the main means of access to the collector street system, highways, and expressways.

(85) *Street, collector.* Streets, which in addition to servicing abutting properties, intercept local streets, connect with community facilities and carry neighborhood traffic to the arterial street systems.

(86) *Street, line.* A dividing line between a lot, tract, or parcel of land and contiguous street.

(87) *Street, local.* A street designated to provide access to abutting property from collector and arterial streets,

(88) *Street, private.* A street which is privately owned and affords a primary means of access to abutting property.

(89) *Street, public.* A street dedicated to the public or held in fee simple title by the city which affords a primary means of access to abutting property.

(90) *Street, width.* The horizontal distance between the outside edges of a street's pavement, including any curbing and guttering, measured at right angles to the street's centerline.

(91) *Structural alteration.* Any change in the supporting members of a building, such as bearing walls or partitions, columns, beams or girders, or any complete rebuilding of the roof or the exterior walls.

(92) *Structure.* Anything constructed or erected, the use of which requires permanent location on or in the ground or attached to something having permanent location on the ground, including, but without limiting the generality of the foregoing: buildings, fences, gazebos, advertising signs, billboards, backstops for tennis courts, radio and television antennae and towers and swimming pools.

(92.5) *Subdivision.* The division of a parcel of land into two (2) or more lots, or other divisions of land.

(93) *Telecommunication tower.* A structure that is designed and constructed for the support of one (1) or more antennas for telephone, radio and similar communication purposes, including self-

supporting lattice towers, guyed towers, or monopole towers. The term includes radio, television and transmission towers, microwave towers, common-carrier towers, cellular telephone towers, alternative tower structures, and the like, either constructed from the ground or located on top of a building. The term shall exclude any tower or antenna that is under seventy (70) feet in height and is owned and operated by a federally-licensed amateur radio station operator or is used exclusively for receive only antennas. The height of the tower is defined as the distance measured from the lowest point of the base of the tower structure to the highest point on the tower, including the base pad when constructed from the ground and any antennas. The term excludes supervisory control and data acquisition (SCADA) antennas installed and operated by units of government.

(94) *Townhouse.* A dwelling unit having accommodations for one (1) family which is connected to two (2) or more other units by a common wall.

(95) *Transitional housing.* A shelter which provides only lodging, or lodging and meals, for no longer than thirty (30) days at any one (1) time for residents, with the goal of assisting the individuals to be able to live independently.

(96) *Vehicle fueling station.* Any premises used for the sale at retail of vehicle fuels or oils, but not including vehicle servicing, lubricating or repairs.

(97) *Vehicle service station.* Any premises used for the equipping, lubricating, servicing or repairing of motor vehicles, including the installation of parts and accessories; the rebuilding, replacing and the installing of motors, transmissions, drive trains, exhaust systems, upholstery, brakes, radiators, but not including the dismantling or extended storage of wrecked vehicles, nor tire recapping, nor auto painting or body work, nor the open storage of rental vehicles or trailers.

(98) *Yard.* An open space on the same lot with a building, unoccupied and unobstructed by any portion of a structure from the ground upward, except as otherwise provided herein. In measuring a yard for the purpose of determining the width of a side yard, the depth of a front yard or the depth of a rear yard, the minimum horizontal distance between the lot line and the main building shall be used.

(99) *Yard, front.* A yard extending across the front of a lot between the side lot lines, and being the minimum horizontal distance between the street line and the main building or any projections thereof other than the projection of the usual steps, unenclosed balconies, or open porches.

(100) *Yard, rear.* A yard extending across the rear of a lot, measured between the side lot lines, and being the minimum horizontal distance between the rear lot line and the rear of the main building or any projections other than steps, unenclosed balconies or open porches. On corner lots the front line of the rear yard shall be considered as parallel to the street upon which the lot has its least dimension. On both corner lots and interior lots, the rear yard shall in all cases be at the opposite end of the lot from the front yard.

(101) *Yard, side.* A yard between the main building and the side line of the lot, and extending from the front yard line to the rear yard line.

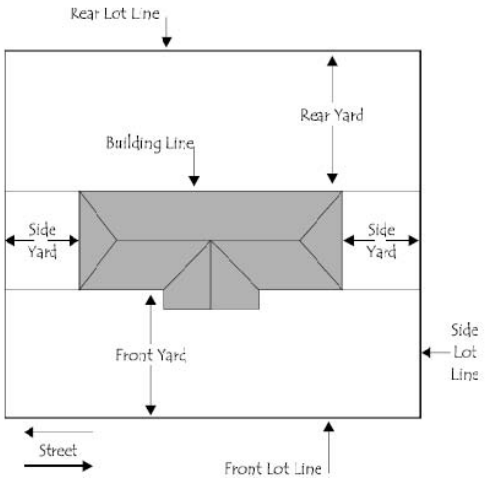


(Ord. No. 4109, art. 2, 3-1-10; Ord. No. 4184, art. 1, 12-20-10; Ord. No. 4206, art. 2, 3-7-11)

## ARTICLE 2. ADMINISTRATION, ENFORCEMENT AND REVIEW

Sec. 30-201. Administration; director of development services.

Sec. 30-202. Planning and zoning commission.

Sec. 30-203. Historic preservation commission.

Sec. 30-204. Board of adjustment; created; composition, term, removal of members; rules, quorums, officers, meetings, records; appeals; powers.

Sec. 30-205. Enforcement.

Sec. 30-206. Amendments.

### Sec. 30-201. Administration; director of development services.

Unless otherwise specifically stated by the city manager, the director of development services shall be considered the administrator of this zoning ordinance, and all regulations contained herein.

(Ord. No. 4109, art. 2, 3-1-10)

### Sec. 30-202. Planning and zoning commission.

(a) *[Terms defined.]* For the purpose of this section the following terms mean or include:

*Commission* means the planning and zoning commission.

*Council* means the chief legislative body of the City of Cape Girardeau.

(b) *Creation of commission.* There is hereby created a planning and zoning commission which shall hereby be referenced to as "the commission".

(c) *Composition, appointments, terms and qualification of commission.* The commission shall consist of nine (9) citizen members appointed and approved by the city council. Except as otherwise provided in section 2-98, members of the planning and zoning commission shall serve for terms of four (4) years, beginning on the second day of November. All members' terms shall be staggered so that two (2) members' terms expire each year, but every fourth year three (3) members' terms shall expire.

(d) *Removal.* The council may remove any citizen member for cause stated in writing and after public hearing.

(e) *Functions of commission.* The commission shall have and perform all of the functions of the zoning commission provided for in RSMo §§ 89.010 to 89.250.

(f) *Procedure: officers, rules, records, employees; expenditures.* The commission shall elect officers annually during the month of January, and from time to time provide such rules and regulations, not inconsistent with the ordinances of the city or the laws of the state, for its own organization and procedure as it may deem proper, provided, however, its chairman shall be elected from the appointed citizen members. The commission shall hold regular meetings and special meetings as they provide by rule, and shall keep a record of its proceedings. These records shall be public records. The commission shall appoint the employees and staff necessary for its work and may contract with city planners and other professional persons for the services that it requires. The expenditures of the commission shall be within the amounts appropriated for the purpose of the city council.

(g) *Powers and duties.* The commission may make reports and recommendations relating to the plan and development of the city to public officials and agencies, public utility companies, civic, educational, professional and other organizations and citizens. It may recommend to the executive or legislative officials of the municipality programs for public improvements and the financing thereof. All public officials shall, upon request, furnish to the commission within a reasonable time, all available information it requires for its work. The commission, its members and employees, in the performance of its functions, may enter upon any land to make examinations and surveys. In general, the commission shall have the power necessary to enable it to perform its functions and promote municipal planning.

(h) *City plans, contents, zoning plan.* The commission shall make and adopt a city plan for the physical development of the city. The city plan, with the accompanying maps, plats, charts and descriptive and explanatory matter, shall show the commission's recommendation for the physical development and uses of land, and may include, among other things, the general location, character and extent of streets and other public ways, grounds, places and spaces; the general location and extent of public utilities and terminals, whether publicly or privately owned, the acceptance, widening, removal, extension, relocation, narrowing, vacation, abandonment or change of use of any of the foregoing; the general character, extent and layout of the replanning of blighted districts and slum areas. The commission may also prepare a zoning plan for the regulations of the height, area, bulk, location and use of private, nonprofit and public structures and premises, and of population density, but the adoption, enforcement and administration of the zoning plan shall conform to the provisions of RSMo §§ 89.010 to 89.250, as amended.

(i) *Plan; how prepared; purposes.* In the preparation of the city plan, the commission shall make careful and comprehensive surveys and studies of the existing conditions and probable future growth of the city. The plan shall be made with the general purpose of guiding and accomplishing a coordinated development of the city which will, in accordance with existing and future needs, best promote the general welfare, as well as efficiency and economy in the process of development.

(j) *Adoption of plan; procedure.* The commission may adopt the plan as a whole by a single resolution, or, as the work of making the whole city plan progresses, may from time to time adopt a part or parts thereof, any part to correspond generally with one (1) or more of the functional subdivisions of the subject matter of the plan. Before the adoption, amendment or extension of the plan or portion thereof the commission shall hold at least one (1) public hearing thereon. Fifteen (15) days' notice of the time and place of such hearing shall be published in at least one (1) newspaper having general circulation within the municipality. The hearing may be adjourned from time to time. The adoption of the plan requires a majority vote of the full membership of the planning and zoning commission. The resolution shall refer expressly to the maps, descriptive matter and other matters intended by the commission to form the whole or part of the plan and the action taken shall be recorded on the adopted plan or part thereof by the identifying signature of the secretary of the commission and filed in the office of the commission, identified properly by file number, and a copy of the plan or part thereof shall be certified to the council and the municipal clerk, and a copy shall be available in the office of the county recorder of deeds and shall be available at the municipal clerk's office for public inspection during normal office hours.

(k) *Commission to approve improvements; commission disapproval, how overruled.* Whenever the commission adopts the plan of the city or any part thereof, no street or other public facilities, or no public utility, whether publicly or privately owned, and, the location, extent and character thereof having been included in the recommendations and proposals of the plan or portions thereof, shall be constructed or authorized in the city until the location, extent and character thereof has been submitted to and approved by the commission. In case of disapproval the commission shall communicate its reasons to the council, and the council, by vote of not less than two-thirds (2/3) of its entire membership, may overrule the disapproval and, upon the overruling, the council or the appropriate board or officer may proceed, except that if the public facility or utility is one the

authorization or financing of which does not fall within the province of the council, then the submission to the commission shall be by the board having jurisdiction, and the commission's disapproval may be overruled by that board by a vote of not less than two-thirds (2/3) of its entire membership. The acceptance, widening, removal, extension, relocation, narrowing, vacation, abandonment, change of use, acquisition of land for, sale or lease of any street or other public facility is subject to similar submission and approval, and the failure to approve may be similarly overruled. The failure of the commission to act within sixty (60) days after the date of official submission to it shall be deemed approval.

(l) *Commission to make recommendations to council on plats; when.* When the commission adopts a city plan which includes at least a major street plan or progresses in its city planning to the making and adoption of a major street plan, and files a certified copy of the major street plan in the office of the county recorder, no plat of a subdivision of land lying within the city shall be filed or recorded until it has been submitted to and a report and recommendation thereon made by the commission to the city council and the council has approved the plat as provided by law.

(m) *Regulations governing subdivision of land, contents, public hearings.* The commission shall recommend and the council may by ordinance adopt regulations governing the subdivision of land within its jurisdiction. The regulations, in addition to the requirements provided by law for the approval of plats, may provide requirements for the coordinated development of the city; for the coordination of streets within subdivisions with other existing or planned streets or with other features of the city plan or official map of the city; for adequate open spaces for traffic, recreation, light and air; and for a distribution of population and traffic.

The regulation may include requirements as to the extent and the manner in which the streets of the subdivision or any designated portions thereto shall be graded and improved as well as including requirements as to the extent and manner of the installation of all utility facilities, and compliance with all of these requirements is a condition precedent to the approval of the plat. The regulations or practice of the council may provide for the tentative approval of the plat previous to the improvements and installation; but any tentative approval shall not be entered on the plat. The regulations may provide that, in lieu of the completion of the work and installations previous to the final approval of a plat, the council may accept a bond in an amount and with surety and conditions satisfactory to it, providing for and securing the actual construction and installation of the improvements and utilities within a period specified by the council and expressly in the bond; and the council may enforce the bond by all appropriate legal and equitable remedies. The regulations may provide, in lieu of the completion of the work and installations previous to the final approval of a plat, for an assessment or other method whereby the council is put in an assured position to do the work and make the installations at the cost of the owners of the property within the subdivision. The regulations may provide for the dedication, reservation or acquisition of lands and open spaces necessary for public uses indicated on the city plan and for appropriate means of providing for the compensation, including reasonable charges against the subdivision, if any, and over a period of time and in a manner as is in the public interest.

Before adoption of its subdivision regulations or any amendment thereof, a duly advertised public hearing thereon shall be held by the council.

(n) *Upon complying with the provisions of section 30-202(m).*

(1) *Commission to approve plats; when.* Within sixty (60) days after the submission of a plat to the commission, the commission shall approve or disapprove the plat; otherwise the plat is deemed approved by the commission, except that the commission, with the consent of the applicant for the approval, may extend the sixty-day period. The ground of disapproval of any plat by the commission shall be made a matter of record.

(2) *Commission approval of plats; effects.* The approval of a plat by the commission does not constitute or effect an acceptance by the city or public of the dedication to public use of any street or other ground shown upon the plat.

(3) *Approval of plats required for recording.* No county recorder shall receive for filing or recording any subdivision plat required to be approved by city council or commission unless the plat has endorsed upon it the approval of the city council under the hand of the clerk and the seal of the city, or by the secretary of the commission.

(4) *Use of unapproved plat in sale of land; penalty, vacation or injunction of transfer.* No owner, or agent of the owner, of any land located within the platting jurisdiction of the city, knowingly or with intent to defraud, may transfer, sell, agree to sell, or negotiate to sell that land by reference to or by other use of a plat of any purported subdivision of the land before the plat has been approved by the council or commission and recorded in the office of the county recorder. Any person violating the provisions of this section shall forfeit and pay to the city a penalty not to exceed three hundred dollars ($300.00) for each lot transferred or sold or agreed or negotiated to be sold; and the description by metes and bounds in the instrument of transfer or other document used in the process of selling or transferring shall not exempt the transaction from this penalty. The city may enjoin or vacate the transfer or sale or agreement by legal action, and may recover the penalty in such action.

(5) *Public improvements; how approved after adoption of major street plan.* Upon adoption of a major street plan and subdivision regulations, the city shall not accept, lay out, open, improve, grade, pave or light any street, lay or authorize the laying of water mains, sewers, connections or other utilities in any street within the city unless the street has received the legal status of a public street prior to the adoption of a city plan; or unless the street corresponds in its location and lines with a street shown on a subdivision plat approved by the council or commission or on a street plan made by and adopted by the commission. The council may locate and construct or may accept any other street if the ordinance or other measure for the location and construction or for the acceptance is first submitted to the commission for its approval and approved by the commission or, if disapproved by the commission, is passed by the affirmative vote of not less than two-thirds (2/3) of the entire membership of the council.

(o) *No building permitted on streets not conforming to major street plan.* After the adoption of a major street plan, no building permit shall be issued for and no building shall be erected on any lot within the territorial jurisdiction of the commission unless the street giving access to the lot upon which the building is proposed to be placed conforms to the requirements of section 30-202(n).

(p) *Establishment of building lines; board of adjustment.* Whenever a plan for major streets has been adopted, the council, upon recommendation of the commission, is authorized and empowered to establish, regulate and limit and amend, by ordinance, building or setback lines on major streets, and to prohibit any new building being located within building or setback lines. When a plan for proposed major streets or other public improvements has been adopted, the council is authorized to prohibit any new building being located within the proposed site or right-of-way when the centerline of the proposed street or the limits of the proposed sites have been carefully determined and are accurately delineated on maps approved by the commission and adopted by the council. The regulations of this section shall not be adopted, changed, or amended until a public hearing has been held thereon as provided in section 30-202(j).

(Ord. No. 4109, art. 2, 3-1-10; Ord. No. 4206, arts. 3, 4, 3-7-11)

## Sec. 30-203. Historic preservation commission.

(a) *Composition.* The Cape Girardeau Historic Preservation Commission shall consist of nine (9) members, plus ex-officio members, all of whom shall be appointed by the city council. The council shall make every effort to appoint persons with a demonstrated interest in the historical preservation of the city. To the extent available, the Historic Preservation Commission shall include professional

members representing such disciplines as architecture, law, real estate, history or any other field related to historic preservation.

(b) *Reserved.*

(c) *Terms.* Except as otherwise provided in section 2-98, the terms of office of the appointed members of the historic preservation commission shall be for three (3) years, beginning on the seventeenth day of April. All members' terms shall be staggered so that three (3) members' terms shall expire each year. Vacancies shall be filled within sixty (60) days. A member may be appointed to a shorter term, however, if necessary to accomplish the requirements of this paragraph.

(d) *Officers, duties.* The historic preservation commission shall meet annually during the month of May to elect officers. All officers of the historic preservation commission shall be eligible for reelection. The chairman shall preside over meetings. In the absence of the chairman, the vice-chairman shall perform the duties of the chairman. If both are absent, a temporary chairman shall be elected by those present. The officers shall assure that the following duties of the historic preservation commission are performed:

(1) Preparation of minutes of each historic preservation commission meeting and hearing.

(2) Publication and distribution of copies of the minutes, reports and decisions of the historic preservation commission to the members of the historic preservation commission.

(3) Provision of notice as required herein or by law for all public hearings conducted by the historic preservation commission.

(4) Notification to the city clerk of vacancies on the historic preservation commission and expiring terms of members.

(5) Preparation and submission to the city council of a complete record and votes of the proceedings before the historic preservation commission on any matter requiring city council consideration.

(e) *Meetings.* Meetings shall be held at regularly scheduled times to be established by resolution of the historic preservation commission, but not less than monthly, at the beginning of each calendar year, or at any time upon the call of the chairman:

(1) No member of the historic preservation commission shall vote on any matter which may materially or apparently affect the property, income or business interest of that member.

(2) The historic preservation commission shall keep minutes of its proceedings, showing the vote, indicating such fact, and shall be filed in the office of the historic preservation commission and shall be a public record.

(f) *Powers and duties.* The historic preservation commission shall have the following powers and duties:

(1) To increase public awareness of the value of historic, architectural and cultural preservation by developing and participating in public information programs and by recommending the update of the preservation program.

(2) To initiate and recommend property and/or properties for proposed designations as landmark and/or historic districts and to review and comment on proposed designations.

(3) To review applications for construction, alteration, or reconstruction for landmarks, or structures within a historic district.

(4) To review proposed changes in buildings, structures, street furniture, city parks, civic areas, public facilities or environmental features of a landmark or within a historic district.

(5) To review applications for demolition permits, proposed zoning amendments or applications for zoning variances, for a landmark or within a historic district.

(6) May review applications for special use permits, proposed zoning amendments, or applications for zoning variances, for a landmark or within a historic district, and to make recommendations concerning such requests to the planning and zoning commission or board of adjustment as indicated by the nature of the request.

(7) To initiate from time to time a comprehensive review of the provisions of this article or any part thereof.

(8) To disseminate to owners or occupants of landmarks or within historic districts, or to the general public information concerning the preservation of landmarks or historic districts.

(9) The historic preservation commission may support the nomination to the national register of historic places, local landmarks, and districts which the commission members believe meet the standards herein set forth and have contributed to the history, architecture and culture of the city.

(10) To initiate, develop and supervise surveys, to identify historically and architecturally significant properties, structures, and areas that exemplify the cultural, social, economic, political, or architectural history of the nation, state or city.

(11) The historic preservation commission may recommend the city apply for, receive, or expend any federal, state or private grant, grant-in-aid, or bequest, in furtherance of the general purpose of this article.

(12) To recommend grants, tax incentives, and benefits to encourage redevelopment of historically significant structures.

(g) *Surveys and research.* The historic preservation commission shall establish and maintain a survey and inventory of historic properties in accordance with standards and guidelines established by the Secretary of the Interior's "Standards and Guidelines for Historic Preservation". The survey will be compatible with Missouri's statewide historical preservation comprehensive planning process. In establishing the foregoing information, the historic preservation commission shall place particular emphasis upon evaluating and incorporating the findings of studies and surveys already completed.

(h) *Review of public improvement projects.* Public improvements by the city or any of its departments or agencies may be reviewed by the historic preservation commission in the following manner:

(1) The historic preservation commission may review and comment upon any capital improvement project proposed by the city or any of its agencies or departments within any historic district, on the site of or within one hundred eighty-five (185) feet of any landmark, or within one hundred eighty-five (185) feet of any historic district. The historic preservation commission shall have thirty (30) days to complete its review and report to the director of development services. The division of planning services, if necessary to accelerate the design review process, may specify a time less than thirty (30) days within which the historic preservation commission shall complete its review and report. The report by the historic preservation commission shall include any recommendations for changes to the preliminary design that will lessen or alleviate any adverse effect of the proposed project upon the historic or architectural character of the landmark or historic district. The commission's report along with responses shall be presented with the public improvement plans to the council for approval.

(2) The historic preservation commission may review and make recommendations upon any acquisition by the City or any of its agencies or departments of any designated landmark or of any building within a historic district. The city council or the division of planning services may, at the earliest possible date that will not interfere with acquisition negotiations, send the historic preservation commission information concerning the location, size, current use, and proposed use of the land or building to be acquired, and specify the date by which the historic preservation commission shall report to the city council.

(Ord. No. 4109, art. 2, 3-1-10; Ord. No. 4440, art. 1, 2-19-13)

## Sec. 30-204. Board of adjustment; created; composition, term, removal of members; rules, quorums, officers, meetings, records; appeals; powers.

(a) A board of adjustment is hereby created. The board shall consist of five (5) members, who shall be freeholders, appointed by the mayor and approved by the city council. Except as otherwise provided in section 2-98, members of the board of adjustment shall serve terms of five (5) years, beginning on the seventh day of March. All members' terms shall be staggered so that one (1) member's term shall expire each year. Three (3) alternate members may be appointed to serve in the absence of, or the disqualification of, the regular members. Except as otherwise provided in section 2-98, these alternate members shall be appointed for a term of five (5) years each, beginning on the fifth day of September. All alternate members' terms shall begin and end on the same date. Any regular or alternate members shall be removable for cause by the mayor and city council upon written charges and after public hearing.

(b) The board of adjustment shall adopt rules for the conduct of business, and keep a public record of all findings and decisions. The board of adjustment shall meet annually in the month of April to elect officers. Meetings of the board shall also be held at the call of the chairman and at such other times as the board may determine. Each session of the Board of Adjustment, at which an appeal is to be heard, shall be a public meeting with public notice of such meeting and business to be carried on published in a newspaper of general circulation in the city, at least one (1) time seven (7) days prior to the meeting. The concurring vote of four (4) members of the board shall be necessary to reverse any order, requirement, decision or determination of the building official or to decide in favor of the applicant on any matter upon which it is required to pass under these regulations.

(c) Appeals to the board of adjustment may be taken by any person aggrieved or by any officer, department, board or bureau of the city affected by any decision of the building official. Such appeal shall be taken within a reasonable time, as provided by the rules of the board, by filing with the building official and with the board of adjustment a notice of appeal specifying the grounds thereof. A fee of fifty dollars ($50.00) shall accompany all notices of appeal. The building official shall forthwith transmit to the board all papers constituting the record upon which the action appealed from was taken.

(d) The board of adjustment shall have the following powers:

(1) To hear and decide appeals where it is alleged there is an error in any order, requirement, decision or determination made by the building official in the enforcement of this chapter and may affirm or reverse, in whole or part, such decision of the enforcement officer.

(2) To hear requests for variances from the literal provisions of this chapter in instances where strict enforcement of this chapter would cause undue hardship due to circumstances unique to the individual property under consideration and grant such variances only when it is demonstrated that such action will be in keeping with the spirit and intent of this chapter. the board of adjustment must determine that the alleged hardship has not been created by any person presently having an interest in the property, and the particular circumstances involved would result in an undue hardship upon the owner as distinguished from a mere inconvenience if the strict letter of the regulations were carried out. The board of adjustment may impose conditions in the granting of the variances to insure compliance and to protect adjacent property.

(3) To hold a public hearing on, and decide the following exceptions to or variations of this article:

a. To permit the extension of the district where the boundary line thereof divides a lot held in a single ownership at the time of adoption of this article.

b. Interpret the provisions of this article in such a way as to carry out the intent and purpose of the plan, as shown upon the zoning district map, where the street layout on the ground varies from the street layout as shown on this map.

c. Vary the yard regulations where there is an exceptional or unusual physical condition of a lot, not generally prevalent in the neighborhood, which condition, when related to the yard regulations of this article, would prevent a reasonable or sensible arrangement of buildings on a lot.

d. Vary the parking regulations by not more than fifty (50) percent where it is conclusively shown that the specific use of a building would make unnecessary the parking spaces otherwise required by the City Code, or where it can be conclusively shown that adequate off-street parking to serve a particular use has been provided by or is controlled by the city.

e. Vary the requirement for off-street parking space in the front yard of any R district, or any other district when the property is used for residential purposes, to allow a driveway providing access to a residential space other than a garage, carport or other parking area behind the front yard, but only within secondary front yards required on corner lots, and for the purpose of providing access for handicapped residents.

In granting such a variance, the board of adjustment may also stipulate that the drive may be used for access only and that no long term (four (4) hours or more) parking of vehicles be permitted.

(e) Decision of the board in respect to the above shall be subject to appeal to the circuit court of the county within thirty (30) days after the filing of the decision in the office of the board.

(f) In the event that any application is denied by the board, a reapplication for the purposes of further review of the same application shall not be accepted by the board until six (6) months following the date of final action on the original application has elapsed, unless it can be shown to the satisfaction of the building official that substantial new evidence not available during the review of the original application will be presented.

(g) Any variance granted by the board of adjustment shall be valid for a period no greater than one hundred eighty (180) days from the date upon which the variance is granted, unless within such period:

(1) A building permit is obtained and the construction, or the alteration, of the structure is commenced and pursued diligently toward completion.

(2) A certificate of occupancy is obtained and a use or occupancy commenced. The board may grant extensions not exceeding one hundred eighty (180) days, upon written application, without notice or public hearing.

(Ord. No. 4109, art. 2, 3-1-10)

## Sec. 30-205. Enforcement.

(a) *Violation; penalty.*

(1) Except as otherwise provided in this section, any person violating the provisions of this chapter is guilty of a misdemeanor and upon conviction thereof shall be fined not less than fifty dollars ($50.00) nor more than five hundred dollars ($500.00) for each and every day that such violation continues, or by imprisonment in the city jail for not more than three (3) months, or by both such fine and imprisonment.

(2) The owner or agent of a building or premises in or upon which a violation of any provision of this chapter has been committed or shall exist, or the lessee or tenant of an entire building or entire premises in or upon which a violation has been committed or shall exist, or the agent, architect, building contractor, or any other person who commits, takes part or assists in any violation or who maintains any building or premises in or upon which such violation shall exist, shall be guilty of a misdemeanor punishable by a fine of not less than fifty dollars ($50.00) and not more than five hundred dollars ($500.00) for each and every day that such violation continues, or by imprisonment in the city jail for not more than three (3) months, or by both such fine and imprisonment.

(3) In addition to the above procedure, the city attorney is also authorized to institute any appropriate action or proceeding to prevent violations of the zoning code, to restrain, correct, or abate such violations, to prevent the occupancy of buildings, structures, or lands, or to prevent any illegal act, conduct, business, or use in or about such premises. An appropriate action or proceeding shall include, but shall not be limited to, injunctive relief and any other appropriate action at law or in equity.

(b) *Enforcement; application and permits.* It shall be the duty of the person designated as building official to administer and enforce the regulations contained herein.

(1) It shall be unlawful to commence or to proceed with erection, construction, reconstruction, conversion, alteration, enlargement, extension, raising, or moving of any building or structure, or any portion thereof, without first having applied in writing to the building official for a building permit to do so and a building permit has been granted therefor.

(2) Every application for a building permit shall be in writing and delivered to the building official and shall be accompanied by a detailed set of plans for structures in the C and M districts in duplicate, showing the size of the proposed building or structure, its location on the lot, the basic materials of which it is to be constructed, and the details and type of construction to be used. On the issuance of a permit, one (1) set of such plans shall be retained by the building official as a permanent record and one (1) set shall be returned to the applicant. In cases of any building or structure to be located in an R district, the building official may at his own discretion permit the substitution of a written statement covering the essential information required in place of such plans.

(3) Blank forms shall be provided by the building official for the use of those applying for permits as provided in this chapter. Any permits issued by the building official shall be on standard forms for such purpose and furnished by the city.

(4) A careful record of all such applications, plans, and permits shall be kept in the office of the building official.

(5) Any building permit, under which no construction work has been commenced within six (6) months after the date of issue of such permit or under which the proposed construction has not been completed within two (2) years of the date of issue, shall expire by limitation.

(6) Subsequent to the effective date of the ordinance from which this article derives, no change in the use of occupancy of land, nor any change of use or occupancy in an existing building other than for single-family dwelling purposes, shall be made, nor shall any new building be occupied until a certificate of occupancy has been issued by the building official. Every certificate of occupancy shall state that the new occupancy complies with all applicable provisions of the zoning ordinance, subdivision regulations, development code, and building codes of the city. No permit for excavation for, or the erection or alteration of, any building shall be issued before the application has been made and approved for a certificate of occupancy and compliance, and no building or premises shall be occupied until such certificate and permit is issued. A record of all certificates of occupancy shall be kept on file in the office of the building official and copies shall

be furnished on request to any person having a proprietary or tenancy interest in land or a building affected by such certificate of occupancy.

(Ord. No. 4109, art. 2, 3-1-10; Ord. No. 4289, art. 1, 1-9-12)

## Sec. 30-206. Amendments.

(a) The city council may by ordinance on its own motion or on application amend, supplement, change, modify or repeal the boundaries or zoning designation of districts herein established, under the procedures herein provided.

(b) Applications for district changes shall be filed in writing with the city clerk, who shall place the application before the city council after determining that it is in proper form as provided herein. All applications, except those proposed by the city council or the planning and zoning commission, shall be accompanied by the actual cost of publication to be returned to the applicant only if such publication is not made. A copy of the application shall remain on file with the city clerk for public inspection until final action thereon.

(c) The city council may provide forms for applications and may require applicants to provide plats and other documents or other information it may determine to be of value in acting upon the application. The city council may request the opinions and recommendations of city boards and officers upon applications.

(d) Upon receipt of an application in proper form, the city council shall refer it to the planning and zoning commission. The city council may by resolution delegate the duty of such receipt and referral to the city manager. The planning and zoning commission shall return the application to the city council with its recommendations relating thereto and showing the number of votes for and against its action, and may include a summary of the reasons expressed for and in opposition thereto. The city council may set a date by which the recommendation shall be returned, no less than twenty (20) days from the date of such setting, and the city council may proceed without receipt of such recommendation in the absence of receipt by such date.

(e) The city council may reject an application without referring it to the planning and zoning commission and without publishing a notice of hearing if the application is made within two (2) years of the city council's rejection of a previous application seeking an amendment for the same or a larger or smaller included tract.

(f) If the planning and zoning commission recommends approval of an application in whole or in part, the city manager shall, without delay, set a public hearing as provided in section 30-206(h) at the earliest possible regular council meeting. The city council may reschedule any hearing set by the city manager. If the planning and zoning commission recommends rejection of an application in full, the city council may set a public hearing as provided in section 30-206(h) upon its own motion, or the city council may by motion file such recommendation of rejection, and the application shall thereupon be deemed rejected unless, within ten (10) days from such filing, the applicant files a written request with the city clerk for a public hearing under section 30-206(h), or makes an oral request therefore at a regular or special meeting of the city council, whereupon the city council shall set such a public hearing. If the city council fails to approve an application in whole or in part within thirty-five (35) days after the public hearing, such application shall be deemed to have been rejected in full, unless the city council shall have expressly extended such time period prior to the expiration thereof.

(g) The city council may by ordinance, on its own motion or on application, amend, supplement, change, modify or repeal the regulations or restrictions of districts herein established, following referral thereof to the planning and zoning commission as provided in section 30-206(h).

(h) No amendment, supplement, or change of the regulations or restrictions or boundaries of districts shall become effective until after the city council has held a public hearing in relation thereto, at

which parties in interest and citizens shall have an opportunity to be heard. At least fifteen (15) days' notice of the time and place of such hearing shall be published in a newspaper of general circulation in the city. The city council may provide for the posting of notices of the hearing on the tract and for other means of notifying the public or interested persons of the proceedings.

(i) In the case of a protest against any amendment, supplement, change, modification, or repeal of a regulation, restriction, or boundary of a district, duly signed and acknowledged by the owners of thirty (30) percent or more, either of the areas of the land, exclusive of streets and alleys, included in such proposed change or within an area determined by lines drawn parallel to and one hundred eighty-five (185) feet distant from the boundaries of the district proposed to be changed, such amendment shall not become effective except by the favorable vote of two-thirds (2/3) of all the members of the city council.

(j) In its action upon an application for change in district boundaries, the city council may grant a special use permit, if allowed in the appropriate district, rather than the requested change in district boundaries.

(Ord. No. 4109, art. 2, 3-1-10)

## ARTICLE 3. DISTRICT REGULATIONS

Sec. 30-300. General.
Sec. 30-310. AG, Agricultural District.
Sec. 30-311. AG-1, exclusive agricultural district.
Sec. 30-320. Residential districts.
Sec. 30-321. RE, rural estate single-family district.
Sec. 30-322. R-1, single-family suburban residential district.
Sec. 30-323. R-2, single-family urban residential district.
Sec. 30-324. R-3, high density single-family residential district.
Sec. 30-325. R-4, medium density multifamily residential district.
Sec. 30-326. R-5, high density multifamily residential district.
Sec. 30-327. RUMD, residential urban mixed density district.
Sec. 30-328. RMH, residential manufactured home district.
Sec. 30-330. Commercial and manufacturing/industrial districts.
Sec. 30-331. NC, neighborhood commercial district.
Sec. 30-332. CBD, central business district.
Sec. 30-333. C-1, general commercial district.
Sec. 30-334. C-2, highway commercial district.
Sec. 30-335. M-1, light manufacturing/industrial district.
Sec. 30-336. M-2, heavy manufacturing/industrial district.
Sec. 30-340. Other districts.
Sec. 30-341. PD, planned development district.
Sec. 30-342. A-1, airport district.
Sec. 30-350. Overlay districts.
Sec. 30-351. NCON, neighborhood conservation overlay district.
Sec. 30-352. H, historic overlay district.
Sec. 30-353. CX, adult entertainment overlay district.
Sec. 30-354. IO, increased occupancy overlay district.
Sec. 30-355. DCC, downtown commercial corridor overlay district.

### Sec. 30-300. General.

(a) *District and boundaries thereof.* In order to classify, regulate, and restrict the location of trades, residences, and the locations of buildings designed for specified uses, to regulate and limit the height

and bulk of buildings hereafter erected or structurally altered, to regulate and limit the intensity of the uses of the lot areas, and to regulate and determine the areas of yards, and other open spaces within and surrounding such buildings, the city is hereby divided into districts of which there shall be twenty-one (21) in number, known as:

AG - Agricultural District

AG1 - Exclusive Agricultural District

RE - Rural Estate Single-Family District

R1 - Single-Family Suburban Residential District

R2 - Single-Family Urban Residential District

R3 - High Density Single-Family Residential District

R4 - Medium Density Multifamily Residential District

R5 - High Density Multifamily Residential District

RUMD - Residential Urban Mixed Density District

RMH - Residential Manufactured Home District

NC - Neighborhood Commercial District

CBD - Central Business District

C1 - General Commercial District

C2 - Highway Commercial District

PD - Planned Development District

A1 - Airport District

M1 - Light Manufacturing/Industrial District

M2 - Heavy Manufacturing/Industrial District

NCON - Neighborhood Conservation Overlay District

H - Local Historic Overlay District

CX - Adult Entertainment Overlay District

IO - Increased Occupancy Overlay District

DCC - Downtown Commercial Corridor Overlay District

(1) Unless otherwise indicated by the city ordinances, the boundaries of the districts shall follow property lines, and shall not include streets and alleys. Those districts and their boundaries are shown upon the city's zoning district map as that map may, from time to time, be amended. The

district map and all the notations, references and other information shown thereon are a part of this chapter and have the same force and effect as if the district map and all the notations, references and other information shown thereon were all fully set forth or described herein, the original of which district map is properly attested and is on file with the city clerk.

(2) Whenever any street, alley or other public way is vacated by official action of the city council, the zoning district into which such street, alley, or other public way is incorporated shall automatically include such vacated property, and all areas included in the vacation shall then and hence forth be subject to all appropriate regulations of the extended districts.

(3) Concurrently with the annexation of any land, the city shall hold a public hearing to zone the land with an appropriate designation and in conformance with the reasonable use of the property. Noticing and hearing procedures shall be in conformance with section 30-206(h).

(4) Where uncertainty exists with respect to the boundaries of the various districts as shown on the map accompanying and made a part of this chapter, the district boundary lines on the map accompanying and made a part of this chapter shall be determined by use of the scale appearing on the map.

(b) *Scope of restrictiveness.* Except as hereinafter provided, no building shall be erected, converted, enlarged, reconstructed or structurally altered, nor shall any building or land be used except for a purpose permitted in the district in which the building or land is located.

(1) No building shall be erected, converted, enlarged, reconstructed or structurally altered to exceed the height limit herein established for the district in which the building is located.

(2) No building shall be erected, converted, enlarged, reconstructed or structurally altered except in conformity with the area regulations of the district in which the building is located.

(3) The yard regulations required by this article are minimum regulations for each and every building existing at the effective date of this chapter and for any building hereafter erected or structurally altered. Unless otherwise allowed by this chapter, no land required for yards or other open spaces around an existing building or any building hereafter erected or structurally altered shall be considered a yard or lot area for more than one (1) building. No land shall be included in the determination of the minimum area of a lot which has been taken from an adjoining lot in such a manner that such adjoining lot thereby fails to meet the minimum lot area requirements for the district in which it lies.

(4) No building shall be erected or structurally altered to the extent specifically provided hereinafter except in conformity with the off-street parking and loading regulations contained in chapter 25 of the City Code.

(Ord. No. 4109, art. 2, 3-1-10; Ord. No. 4206, arts. 5, 6, 3-7-11)

## Sec. 30-310. AG, Agricultural District.

(a) *Purpose.* The purpose of the AG (agricultural) district is to preserve, in agricultural uses, lands suited to future urban development pending proper timing and economical provision of public utilities and community facilities to ensure compact and orderly land use development. This district is intended for land of ten (10) acres or more. The subdivision of land for the purpose of converting agricultural or other undeveloped land to residential use, is not permitted in the AG district.

(b) *Permitted uses.*

(1) Farming, pastureland and agriculture, except commercial feedlots, stockyards and confinement operations.

(2) Orchards.

(3) Keeping or raising of large or small animals or poultry, including structures for storage and processing, and including accessory structures where animals are kept, shall be two hundred (200) feet from the property line. Commercial slaughtering business is not allowed.

(4) Single-family detached dwellings, not to exceed four (4) dwellings per farm.

(5) Police and fire stations.

(6) Bed and breakfasts.

(7) Golf courses and driving ranges; this shall not include separate miniature golf courses and other similar activities operated as a business.

(8) Nurseries and greenhouses; for growing, propagation or sale of plants, turf, trees and shrubs.

(9) Veterinarian facilities, provided that all buildings, structures, pens or open kennels shall be located at least two hundred (200) feet from any lot line.

(10) Riding stables, provided that any building for keeping of animals shall be located at least two hundred (200) feet from any lot line.

(11) Wineries.

(12) Public parks, playgrounds and recreational facilities.

(13) Dog kennels, commercial or noncommercial; provided any commercial open pens, runs, cages, or kennels shall be located at least two hundred (200) feet from any lot line.

(c) *Permitted uses (accessory).*

(1) Private garages, carports and accessory buildings.

(2) Agricultural accessory structures, provided that any building for the keeping of animals shall be located at least two hundred (200) feet from any lot line.

(3) Agricultural product storage.

(4) Roadside stands for sale of agricultural products.

(5) Home occupations, as permitted in section 30-405, supplemental regulations, but not including typical farming operations.

(6) Home day cares, with five (5) or more unrelated children in a twenty-four (24) hour period, as permitted in section 30-408, supplemental regulations.

(7) Solar energy systems, as permitted in section 30-410, supplemental regulations.

(d) *Special uses.*

(1) Commercial day care facilities.

(2) Manufactured home, for the purpose of agricultural related residence.

(3) Wind energy conversion systems, as permitted by section 30-410, supplemental regulations.

(4) Cemeteries on a minimum of ten (10) acres of land.

(5) Public utilities, except for buildings and accessory structures that are normal and customary in a zoning district which would allow other buildings of the same nature as a use-by-right.

(e) *Height, area, bulk and setback regulations.*

(1) *Maximum Height:* Forty (40) feet.

(2) *Minimum District Size:* Ten (10) acres.

(3) *Maximum Density:* One (1) unit per five (5) acres.

(4) *Minimum Lot Width:* Two hundred (200) feet at building setback line.

(5) *Minimum Lot Area:* Five (5) acres for each single-family detached dwelling; no subdivision is required for such lots.

(6) *Minimum Yard Requirements:*

a. *Front yard:* Sixty (60) feet.

b. *Rear yard:* Fifty (50) feet.

c. *Side yard:* Fifty (50) feet.

(f) *Prohibited uses.*

(1) Single-family subdivision.

(Ord. No. 4109, art. 2, 3-1-10)

## Sec. 30-311. AG-1, exclusive agricultural district.

(a) *Purpose.* The purpose of the AG-1 district is to provide for agricultural activities, and to provide for untimely scattering of more dense urban uses, which should be confined to areas planned for efficient extension of public services. The district is established to preserve, in agricultural uses, lands suited for future urban development pending proper timing and economical provision of public utilities and community facilities to ensure compact and orderly land use development. The subdivision of land for the purpose of converting agricultural or other undeveloped land to residential use, where the opening of new streets or roadways is contemplated to accomplish this purpose, is not permitted in an AG-1 district. The subdivision of land for a purpose that relates to a use provided for in the AG-1 district may be allowed. Change of zoning from AG-1 to any other zoning district shall be accompanied by a site plan for development and be subject to provisions of the Code of Ordinances of the City of Cape Girardeau.

(b) *Permitted uses.*

(1) Farming, pastureland and agriculture, except animal feeding operations (AFO) and concentrated animal feeding operations, (CAFO), feedlots, stockyards and confinement operations.

(2) Orchards.

(3) Keeping or raising of large or small animals or poultry, including structures for storage and processing, and including accessory structures where animals are kept. High volume wholesale commercial slaughtering business is not allowed.

(4) Single-family detached dwellings, not to exceed four (4) dwellings per farm, which includes manufactured homes.

(5) Police and fire stations.

(6) Bed and breakfasts.

(7) Golf courses and driving ranges; this shall not include separate miniature golf courses and other similar activities operated as a business.

(8) Nurseries and greenhouses; for growing, propagation or sale of plants, turf, trees and shrubs.

(9) Veterinarian facilities.

(10) Riding stables.

(11) Wineries.

(12) Public parks, playgrounds and recreational facilities.

(13) Dog kennels, commercial or noncommercial; provided any commercial open pens, runs, cages, or kennels shall be located at least two hundred (200) feet from any lot line.

(c) *Permitted uses (accessory).*

(1) Private garages, carports and accessory buildings.

(2) Agricultural accessory structures, provided that any building for the keeping of animals shall be located at least two hundred (200) feet from any lot line.

(3) Agricultural product storage.

(4) Roadside stands for sale of agricultural products.

(5) Home occupations, so long as they do not create nuisance, hazardous or dangerous conditions on the property, to adjoining landowners, or impact public health and welfare.

(6) Home day cares, with five (5) or more unrelated children in a twenty-four (24) hour period, as permitted in section 30-408, supplemental regulations.

(7) Solar energy systems, as permitted in section 30-410, supplemental regulations.

(8) Timber harvest.

(9) Hunting pursuant to Missouri Department of Conservation guidelines.

(d) *Special uses.*

(1) Commercial day care facilities.

(2) Wind energy conversion systems, as permitted by section 30-410, supplemental regulations.

(3) Cemeteries on a minimum of ten (10) acres of land.

(4) Public utilities, except for buildings and accessory structures that are normal and customary in a zoning district which would allow other buildings of the same nature as a use-by-right.

(e) *Height, area, bulk and setback regulations.*

(1) *Maximum Height:* Forty (40) feet.

(2) *Minimum District Size:* Twenty-five (25) acres.

(3) *Maximum Density:* One (1) unit per five (5) acres.

(4) *Minimum Lot Width:* Two hundred (200) feet at building setback line.

(5) *Minimum Lot Area:* Ten (10) acres for each single-family detached dwelling; no subdivision is required for such lots.

(6) *Minimum Yard Requirements:* None

(f) *Prohibited uses.*

(1) Single-family subdivision.

(Ord. No. 4109, art. 2, 3-1-10)

## Sec. 30-320. Residential districts.

Cape Girardeau's residential (R) zoning districts are primarily to create, maintain, and promote a variety of housing opportunities for city residents and to maintain the desired physical character of existing and developed neighborhoods. The R district standards provide development flexibility, while at the same time helping to ensure that new developments achieve continuity with existing structures and compatibility with existing neighborhoods. In addition, the regulations offer certainty for property owners, developers and neighbors about the limits of allowed uses in each district.

(Ord. No. 4109, art. 2, 3-1-10)

## Sec. 30-321. RE, rural estate single-family district.

(a) *Purpose.* This district is intended to promote and preserve "estate" single-family residential development, which is defined as being larger lot sizes with a minimum one and one-half (1½) acres per lot.

(b) *Permitted uses.*

(1) Single-family detached dwelling with only one (1) dwelling per lot.

(2) Hobby farms; with cattle and horse(s) or other farm related animals, allowed on a five (5) acre lot, with one (1) allowed animal per every acre of grazing.

(3) Cluster subdivisions, as permitted in chapter 25 of the City Code.

(4) Public parks, playgrounds, and recreational facilities.

(5) Police and fire stations.

(6) Elementary and middle schools, or development centers for elementary and middle school age children with handicaps or development disabilities, on a minimum of five (5) acres.

(7) Noncommercial, not-for-profit residential neighborhood facilities consisting of indoor and outdoor recreational facilities, offices operated by a neighborhood or community organization or a property owners association.

(8) Golf courses; this shall not include separate miniature golf courses, driving ranges and other similar activities operated as a business.

(c) *Permitted uses (accessory).*

(1) Home day cares, with no more than four (4) unrelated children in a twenty-four (24) hour period, as permitted in section 30-408, supplemental regulations.

(2) Private garages, carports and accessory buildings, as permitted in section 30-403, supplemental regulations.

(3) Guest house, as permitted in section 30-412, supplemental regulations.

(4) In home elderly care, with a maximum of three (3) persons, as permitted in section 30-411, supplemental regulations.

(5) Home occupations, as permitted in section 30-405, supplemental regulations.

(6) Solar energy systems, as permitted in section 40-410, supplemental regulations.

(d) *Special uses.*

(1) Home day cares, with five (5) or more unrelated children in a twenty-four (24) hour period, as permitted in section 30-408, supplemental regulations.

(2) Cemeteries, on a minimum of ten (10) acres of land.

(3) Wind energy conversion systems, as permitted in section 30-410, supplemental regulations.

(4) Public utilities, except for buildings and accessory structures that are normal and customary in a zoning district which would allow other buildings of the same nature as a use-by-right.

(e) *Parking requirements.* Off-street parking and loading spaces shall be provided in accordance with the requirements for specific uses set forth in section 25-202. No parking, stopping, or standing of trucks or commercial motor vehicles licensed for a gross weight in excess of twenty-four thousand (24,000) pounds, except as provided in sections 26-137 and 26-256 of the Code of Ordinances.

(f) *Height, area, bulk, and setback regulations.*

(1) *Maximum Height:* Two and one-half (2½) stories not to exceed thirty-five (35) feet.

(2) *Minimum Lot Area:* One and one-half (1½) acre lots.

(3) *Maximum Density:* One (1) unit per one and one-half (1½) acres. Higher densities may be approved with a cluster subdivision, as permitted in chapter 25 of the City Code.

(4) *Minimum Lot Width:* Two hundred (200) feet.

(5) *Minimum Yard Requirements:*

a. *Front yard:* Fifty (50) feet.

b. *Rear yard:* Fifty (50) feet.

c. *Side yard:* Twenty-five (25) feet.

(Ord. No. 4109, art. 2, 3-1-10; Ord. No. 4149, art. 4, 8-16-10; Ord. No. 4206, art. 7, 3-7-11)

## Sec. 30-322. R-1, single-family suburban residential district.

(a) *Purpose.* The R-1 district is intended primarily for single-family detached dwellings with a maximum density of four (4) units per acre. It is designed to provide for quality single-family residential neighborhoods in a conventional subdivision setting, while encouraging a mix of housing styles, designs and development. Certain other structures and uses necessary to serve the area are allowed as permitted uses or through the approval of a special use permit, subject to restrictions intended to preserve and protect the single-family residential character of the district.

(b) *Permitted uses.*

(1) Single-family detached dwelling, with only one (1) dwelling per lot.

(2) Cluster subdivisions, as permitted in chapter 25 of the City Code.

(3) Golf courses; this shall not include separate miniature golf courses, driving ranges and other similar activities operated as a business.

(4) Public parks, playgrounds, and recreational facilities.

(5) Police and fire stations.

(6) Elementary and middle schools, or development centers for elementary and middle school age children with handicaps or development disabilities, on a minimum of five (5) acres of land.

(7) Noncommercial, not-for-profit residential neighborhood facilities consisting of indoor and outdoor recreational facilities, offices of property owners associations and maintenance facilities operated by a neighborhood or community organization or a property owners association.

(8) Home for eight (8) or fewer unrelated mentally or physically handicapped persons, including no more than two (2) additional persons acting as house parents or guardians who need not be related to each other or to any of the handicapped persons residing in the home, provided that:

a. The exterior appearance of the home and property shall reasonably conform to the exterior appearance of other dwellings and property in the neighborhood; and

b. Such home shall not be located closer than three hundred seventy (370) feet to any other such home.

(9) A private residence licensed by the Missouri Division of Family Services or Missouri Department of Mental Health to provide foster care to one (1) or more, but less than seven (7), children who are unrelated to either foster parent by blood, marriage or adoption, provided that all applicable building and safety codes are met and an occupancy permit issued therefor.

(c) *Permitted uses (accessory).*

(1) Private garages, carports and accessory buildings as permitted in section 30-403, supplemental regulations.

(2) In home elderly care, with a maximum of three (3) persons as permitted in section 30-411, supplemental regulations.

(3) Home occupations, as permitted in section 30-405, supplemental regulations.

(4) Home day cares, with no more than four (4) unrelated children in a twenty-four (24) hour period as permitted in section 30-408, supplemental regulations.

(5) Solar energy systems, as permitted in section 30-410, supplemental regulations.

(d) *Special uses.*

(1) Home day cares, with five (5) or more unrelated children in a twenty-four (24) hour period, as permitted in section 30-408, supplemental regulations.

(2) Libraries, on a minimum of two (2) acres of land.

(3) Cemeteries, on a minimum of ten (10) acres of land.

(4) Wind energy conversion systems, as permitted in section 30-410, supplemental regulations.

(5) Public utilities, except for buildings and accessory structures that are normal and customary in a zoning district which would allow other buildings of the same nature as a use-by-right.

(e) *Height, area, bulk and setback regulations.*

(1) *Maximum Height:* Two and one-half (2½) stories not to exceed thirty-five (35) feet.

(2) *Minimum Lot Area:* Ten thousand (10,000) square feet.

(3) *Maximum Density:* Four (4) units per one (1) acre. Higher densities may be approved with a cluster subdivision, as permitted in chapter 25 of the City Code.

(4) *Minimum Lot Width:* Eighty (80) feet.

(5) *Minimum Yard Requirements:*

a. *Front yard:* Thirty (30) feet.

b. *Rear yard:* Twenty-five (25) feet.

c. *Side yard:* Six (6) feet.

(f) *Parking regulations.* Off-street parking and loading spaces shall be provided in accordance with the requirements for specific uses set forth in section 25-202. No parking, stopping, or standing of trucks

or commercial motor vehicles licensed for a gross weight in excess of twenty-four thousand (24,000) pounds, except as provided in sections 26-137 and 26-256 of the Code of Ordinances.

(Ord. No. 4109, art. 2, 3-1-10; Ord. No. 4149, art. 4, 8-16-10; Ord. No. 4206, art. 7, 3-7-11)

## Sec. 30-323. R-2, single-family urban residential district.

(a) *Purpose.* The R-2, single-family urban residential district is to provide for quality residential neighborhoods that are compact and walkable, to provide public gathering spaces, and to encourage a mix of residential designs, styles and sizes, thus creating a unique, yet cohesive neighborhood. It is also intended to conserve the residential character of existing neighborhoods in the downtown and existing areas of the city. It is designed to promote the preservation and maintenance of older single-family dwellings, while also allowing a variety of uses and density as was originally intended within the downtown area and other earlier developments within the city. It is to provide a full range of single-family housing choices and to promote a sense of community, urban vitality, and the efficient provision of infrastructure.

(b) *Permitted uses.*

(1) Single-family detached dwelling, with only one (1) dwelling per lot.

(2) Cluster subdivisions, as permitted in chapter 25 of the City Code.

(3) Golf courses; this shall not include separate miniature golf courses, driving ranges and other similar activities operated as a business.

(4) Public parks, playgrounds, and recreational facilities.

(5) Police and fire stations.

(6) Elementary and middle schools, or development centers for elementary and middle school age children with handicaps or development disabilities, on a minimum of five (5) acres of land.

(7) Noncommercial, not-for-profit residential neighborhood facilities consisting of indoor and outdoor recreational facilities, offices of property owners associations and maintenance facilities operated by a neighborhood or community organization or a property owners association.

(8) Home for eight (8) or fewer unrelated mentally or physically handicapped persons, including no more than two (2) additional persons acting as house parents or guardians who need not be related to each other or to any of the handicapped persons residing in the home, provided that:

a. The exterior appearance of the home and property shall reasonably conform to the exterior appearance of other dwellings and property in the neighborhood; and

b. Such home shall not be located closer than three hundred seventy (370) feet to any other such home.

(9) A private residence licensed by the Missouri Division of Family Services or Missouri Department of Mental Health to provide foster care to one (1) or more, but less than seven (7), children who are unrelated to either foster parent by blood, marriage or adoption, provided that all applicable building and safety codes are met and an occupancy permit issued therefor.

(c) *Permitted uses (accessory).*

(1) Private garages, carports and accessory buildings as permitted in section 30-403, supplemental regulations.

(2) In home elderly care, with a maximum of three (3) persons as permitted in section 30-411, supplemental regulations.

(3) Home occupations, as permitted in section 30-405, supplemental regulations.

(4) Home day cares, with no more than four (4) unrelated children in a twenty-four (24) hour period as permitted in section 30-408, supplemental regulations.

(5) Solar energy systems, as permitted in section 30-410, supplemental regulations.

(d) *Special uses.*

(1) Home day cares, with five (5) or more unrelated children in a twenty-four (24) hour period, as permitted in section 30-408, supplemental regulations.

(2) Libraries, on a minimum of two (2) acres of land.

(3) Cemeteries, on a minimum of ten (10) acres of land.

(4) Wind energy conversion systems, as permitted in section 30-410, supplemental regulations.

(5) Public utilities, except for buildings and accessory structures that are normal and customary in a zoning district which would allow other buildings of the same nature as a use-by-right.

(e) *Height, area, bulk and setback regulations.*

(1) *Maximum Height:* Two and one-half (2½) stories not to exceed thirty-five (35) feet.

(2) *Minimum Lot Area:* Eight thousand (8,000) square feet.

(3) *Maximum Density:* Five (5) units per one (1) acre. Higher densities may be approved with a cluster subdivision, as permitted in chapter 25 of the City Code.

(4) *Minimum Lot Width:* Sixty (60) feet.

(5) *Minimum Yard Requirements:*

a. *Front yard:* Twenty-five (25) feet.

b. *Rear yard:* Twenty-five (25) feet.

c. *Side yard:* Five (5) feet.

(f) *Parking regulations.* Off-street parking and loading spaces shall be provided in accordance with the requirements for specific uses set forth in section 25-202. No parking, stopping, or standing of trucks or commercial motor vehicles licensed for a gross weight in excess of twenty-four thousand (24,000) pounds, except as provided in sections 26-137 and 26-256 of the Code of Ordinances.

(Ord. No. 4109, art. 2, 3-1-10; Ord. No. 4149, art. 4, 8-16-10; Ord. No. 4206, art. 7, 3-7-11)

## Sec. 30-324. R-3, high density single-family residential district.

(a) *Purpose.* This district is intended to accommodate single-family, two-family and townhouse residential developments at maximum densities of up to nine (9) units per acre. This district will serve as a transition between lower density and higher density residential districts. Certain other structures and uses necessary to serve the area are allowed as permitted uses or through the approval of a special use permit, subject to restrictions intended to preserve and protect the residential character of this district.

(b) *Permitted uses.*

(1) Single-family detached dwellings, with only one (1) dwelling per lot.

(2) Duplexes, two-family dwelling units.

(3) Townhouses.

(4) Cluster subdivisions, as permitted in chapter 25 of the City Code.

(5) Public parks, playgrounds, and recreational facilities.

(6) Police and fire stations.

(7) Elementary and middle schools, or development centers for elementary and middle school age children with handicaps or development disabilities, on a minimum of five (5) acres of land.

(8) Noncommercial, not-for-profit residential neighborhood facilities consisting of indoor and outdoor recreational facilities, offices of property owners associations and maintenance facilities operated by a neighborhood or community organization or a property owners association.

(9) Home for eight (8) or fewer unrelated mentally or physically handicapped persons, including no more than two (2) additional persons acting as house parents or guardians who need not be related to each other or to any of the handicapped persons residing in the home, provided that:

a. The exterior appearance of the home and property shall reasonably conform to the exterior appearance of other dwellings and property in the neighborhood; and

b. Such home shall not be located closer than three hundred seventy (370) feet to any other such home.

(10) A private residence licensed by the Missouri Division of Family Services or Missouri Department of Mental Health to provide foster care to one (1) or more, but less than seven (7), children who are unrelated to either foster parent by blood, marriage or adoption, provided that all applicable building and safety codes are met and an occupancy permit issued therefor.

(c) *Permitted uses (accessory).*

(1) Private garages, carports and accessory buildings, as permitted in section 30-403, supplemental regulations.

(2) Home occupations, as permitted in section 30-405, supplemental regulations.

(3) Home day cares, with no more than (4) unrelated children in a twenty-four (24) hour period as permitted in section 30-408, supplemental regulations.

(4) In home elderly care, with a maximum of three (3) persons as permitted in section 30-411, supplemental regulations.

(5) Solar energy systems, as permitted in section 30-410, supplemental regulations.

(d) *Special uses.*

(1) Home day cares, with five (5) or more unrelated children, as permitted in section 30-408, supplemental regulations.

(2) Bed and breakfasts.

(3) Cemeteries, on a minimum of ten (10) acres of land.

(4) Transitional housing.

(5) Wind energy conversion systems, as permitted in section 30-410, supplemental regulations.

(6) Public utilities, except for buildings and accessory structures that are normal and customary in a zoning district which would allow other buildings of the same nature as a use-by-right.

(e) *Height, area, bulk and setback requirements.*

(1) *Maximum Height:*

a. When side yards are less than fifteen (15) feet in width, two and one-half (2½) stories not to exceed thirty-five (35) feet.

b. When side yards are fifteen (15) feet in width or greater, three (3) stories, not to exceed forty-five (45) feet.

(2) *Minimum Lot Area:*

a. Each townhouse must be on a separate platted lot consisting of at least one thousand four hundred (1,400) square feet.

b. Duplexes, three thousand seven hundred fifty (3,750) square feet per unit.

c. Single-family, five thousand (5,000) square feet.

(3) *Maximum Density:* Nine (9) units per one (1) acre. Higher densities may be approved with a cluster subdivision as permitted in chapter 25 of the City Code.

(4) *Minimum Lot Width:*

a. *Townhouses and duplexes:* Twenty (20) feet.

b. *All other uses:* Thirty (30) feet.

(5) *Minimum Yard Requirements:*

a. *Front yard:*

1. *Each townhouse:* Ten (10) feet.

2. *All other uses:* Twenty (20) feet.

b. *Rear yard:*

1. *Each townhouse:* Twenty (20) feet.

2. *All other uses:* Twenty (20) feet.

c. *Side yard:*

1. *Townhouses and duplexes:* None.

2. *All other uses:* Three (3) feet.

(f) *Open space, landscaping and bufferyard requirements.* For any nonresidential uses:

(1) A minimum of twenty (20) percent of the total lot area shall be devoted to open space, including required yard and buffer yards.

(2) Landscaping, shall be provided as required in chapter 25 of the City Code.

(3) A 20-foot wide bufferyard shall be required adjacent to any property in the AG, AG-1, RE, R-1, or R-2 zoning districts. This bufferyard shall comply with the requirements of chapter 25 of the City Code.

(g) *Parking regulations.* Off-street parking and loading spaces shall be provided in accordance with the requirements for specific uses set forth in section 25-202. No parking, stopping, or standing of trucks or commercial motor vehicles licensed for a gross weight in excess of twenty-four thousand (24,000) pounds, except as provided in sections 26-137 and 26-256 of the Code of Ordinances.

(Ord. No. 4109, art. 2, 3-1-10; Ord. No. 4149, art. 4, 8-16-10; Ord. No. 4206, arts. 7, 9, 10, 3-7-11)

## Sec. 30-325. R-4, medium density multifamily residential district.

(a) *Purpose.* This district is intended to accommodate multifamily residential developments at maximum densities of up to eighteen (18) units per acre. New single-family detached dwellings are not permitted in order to ensure that vacant land set aside for multifamily development is not preempted by less intensive development. Certain other structures and uses necessary to serve governmental, educational, institutional, commercial and recreational uses are allowed.

(b) *Permitted uses.*

(1) Multifamily dwellings.

(2) Townhouses.

(3) Cluster subdivisions, as permitted in chapter 25 of the City Code.

(4) Nursing homes, senior citizen housing and retirement homes.

(5) Noncommercial, not-for-profit residential neighborhood facilities consisting of indoor and outdoor recreational facilities, offices of property owners associations and maintenance facilities operated by a neighborhood or community organization or a property owners association.

(6) Public parks, playgrounds, and recreational facilities.

(7) Police and fire stations.

(8) Elementary, middle and secondary schools, or development centers for elementary, middle and secondary school age children with handicaps or development disabilities, on a minimum of five (5) acres.

(9) Commercial day care.

(c) *Permitted uses (accessory).*

(1) Private garages, carports and accessory buildings, as permitted in section 30-403, supplemental regulations.

(2) Home occupations, as permitted in section 30-405, supplemental regulations.

(3) Solar energy systems, as permitted in section 30-410, supplemental regulations.

(d) *Special uses.*

(1) Bed and breakfasts.

(2) Cemeteries, on a minimum of ten (10) acres of land.

(3) Transitional housing.

(4) Wind energy conversion systems, as permitted by section 30-410, supplemental regulations.

(5) Residential treatment facilities.

(6) Public utilities, except for buildings and accessory structures that are normal and customary in a zoning district which would allow other buildings of the same nature as a use-by-right.

(e) *Height, area, bulk and setback regulations.*

(1) *Maximum Height:* Five (5) stories not to exceed sixty (60) feet.

(2) *Minimum Lot Area:*

a. Each townhouse must be on a separate platted lot consisting of at least one thousand four hundred (1,400) square feet.

b. All other uses: Three thousand seven hundred fifty (3,750) square feet.

(3) *Maximum Density:* Eighteen (18) units per one (1) acre. Higher densities may be approved with a cluster subdivision, as permitted by chapter 25 of the City Code.

(4) *Minimum Lot Width:*

a. *Each townhouse:* Twenty (20) feet.

b. *All other uses:* None.

(5) *Minimum Yard Requirements:*

a. *Front yard:*

1. *Each townhouse:* Ten (10) feet.

2. *All other uses:* Twenty-five (25) feet.

b. *Rear yard:*

1. *Each townhouse:* Twenty (20) feet.

2. *All other uses:* Twenty-five (25) feet.

c. *Side yard:*

1. *Each townhouse:* None.

2. *All other uses:* Five (5) feet.

(6) *Maximum Building Coverage, including accessory building:* Fifty (50) percent of the lot for all uses except townhouses.

(f) *Open space, landscaping and bufferyard requirements.* For any multifamily residential uses or nonresidential uses:

(1) A minimum of twenty (20) percent of the total lot area shall be devoted to open space, including required yard and bufferyards.

(2) Landscaping shall be provided as required in chapter 25 of the City Code.

(3) A 20-foot wide bufferyard shall be required adjacent to any property in the AG, AG-1, RE, R-1, R-2 or R-3 zoning districts. This bufferyard shall comply with the requirements of chapter 25 of the City Code.

(g) *Parking regulations.* Off-street parking and loading spaces shall be provided in accordance with the requirements for specific uses set forth in section 25-202. No parking, stopping, or standing of trucks or commercial motor vehicles licensed for a gross weight in excess of twenty-four thousand (24,000) pounds, except as provided in sections 26-137 and 26-256 of the Code of Ordinances.

(Ord. No. 4109, art. 2, 3-1-10; Ord. No. 4149, art. 4, 8-16-10; Ord. No. 4206, arts. 7, 11, 3-7-11)

## Sec. 30-326. R-5, high density multifamily residential district.

(a) *Purpose.* This district is intended to accommodate multifamily developments at maximum densities of up to thirty (30) units per acre. This district is intended for high density, multifamily development consistent with high intensity use areas. This district is intended for areas that have access for vehicular traffic from collector or arterial streets without traversing minor streets in adjoining residential neighborhoods. New single-family dwellings are not permitted in order to ensure that vacant land set aside for multifamily development is not preempted by less intensive development.

(b) *Permitted uses.*

(1) Multifamily dwellings.

(2) Townhouses.

(3) Cluster subdivisions, as permitted in chapter 25 of the City Code.

(4) Commercial day cares.

(5) Police and fire stations.

(6) Public parks, playgrounds and recreational facilities.

(7) Elementary, middle and secondary schools, or development centers for elementary, middle and secondary school age children with handicaps or development disabilities, on a minimum of five (5) acres of land.

(8) Nursing homes, senior citizen housing or retirement homes.

(c) *Permitted uses (accessory).*

(1) Private garages, carports and accessory buildings, as permitted in section 30-403, supplemental regulations.

(2) Home occupations, as permitted in section 30-405, supplemental regulations.

(3) Solar energy systems, as permitted in section 30-410, supplemental regulations.

(d) *Special uses.*

(1) Bed and breakfasts.

(2) Cemeteries, on a minimum of ten (10) acres of land.

(3) Transitional housing.

(4) Wind energy conversion systems, as permitted by section 30-410, supplemental regulations.

(5) Residential treatment facilities.

(6) Public utilities, except for buildings and accessory structures that are normal and customary in a zoning district which would allow other buildings of the same nature as a use-by-right.

(e) *Height, area, bulk and setback regulations.*

(1) *Maximum Height:* Five (5) stories not to exceed sixty (60) feet.

(2) *Minimum Lot Area:*

a. Each townhouse must be on a separate platted lot consisting of at least one thousand four hundred (1,400) square feet.

b. All other uses: Three thousand seven hundred fifty (3,750) square feet.

(3) *Maximum Density:* Thirty (30) units per one (1) acre. Higher densities may be approved with a cluster subdivision, as permitted by chapter 25 of the City Code.

(4) *Minimum Lot Width:*

a. *Each townhouse:* Twenty (20) feet.

b. *All other uses:* None.

(5) *Minimum Yard Requirements:*

a. *Front yard:*

1. *Each townhouse:* Ten (10) feet.
2. *All other uses:* Twenty-five (25) feet.

b. *Rear yard:*

1. *Each townhouse:* Twenty (20) feet.
2. *All other uses:* Twenty-five (25) feet.

c. *Side yard:*

1. *Each townhouse:* None.
2. *All other uses:* Five (5) feet.

(6) *Maximum Building Coverage, including accessory building:* Fifty (50) percent of the lot for all uses except townhouses.

(f) *Open space, landscaping and bufferyard requirements.* For any multifamily residential uses or nonresidential uses:

(1) A minimum of twenty (20) percent of the total lot area shall be devoted to open space, including required yard and bufferyards.

(2) Landscaping shall be provided as required in chapter 25 of the City Code.

(3) A 20-foot wide bufferyard shall be required adjacent to any property in the AG, AG-1, RE, R-1, R-2 or R-3 zoning districts. This bufferyard shall comply with the requirements of chapter 25 of the City Code.

(g) *Parking regulations.* Off-street parking and loading spaces shall be provided in accordance with the requirements for specific uses set forth in section 25-202. No parking, stopping, or standing of trucks or commercial motor vehicles licensed for a gross weight in excess of twenty-four thousand (24,000) pounds, except as provided in sections 26-137 and 26-256 of the Code of Ordinances.

(Ord. No. 4109, art. 2, 3-1-10; Ord. No. 4149, art. 4, 8-16-10; Ord. No. 4206, arts. 7, 12, 3-7-11)

## Sec. 30-327. RUMD, residential urban mixed density district.

(a) *Purpose.* This district is intended to provide for moderate density residential development with a mixture of housing styles and densities with a maximum twelve (12) units per acre. These developments are characterized by single-family dwellings along with low to medium density multifamily residential structures; such as duplexes, townhouses or multifamily areas. It provides regulation to encourage innovative forms of housing development. It adapts to both established and developing neighborhoods, as well as being a transition between single-family and multifamily areas. It intends to provide for the stability of the existing residential development located in the areas of the city, while accommodating a range of compatible residential densities. This district should be located convenient to commercial uses and employment centers.

(b) *Permitted uses.*

(1) Single-family detached dwellings.

(2) Duplexes, two-family dwelling units.

(3) Multifamily dwellings.

(4) Townhouses.

(5) Cluster subdivisions, as permitted in chapter 25 of the City Code.

(6) Noncommercial, not-for-profit residential neighborhood facilities, including indoor and outdoor recreational facilities, community centers, offices of property owners associations and maintenance facilities operated by a neighborhood or community organization or a property owners association.

(7) Public parks, playgrounds and recreational facilities.

(8) Police and fire stations.

(9) Elementary and middle schools or development centers for elementary and middle school age children with handicaps or development disabilities, on a minimum of five (5) acres of land.

(10) Home for eight (8) or fewer unrelated mentally or physically handicapped persons, including no more than two (2) additional persons acting as house parents or guardians who need not be related to each other or to any of the handicapped persons residing in the home, provided that:

a. The exterior appearance of the home and property shall reasonably conform to the exterior appearance of other dwellings and property in the neighborhood; and

b. Such home shall not be located closer than three hundred seventy (370) feet to any other such home.

(11) A private resident licensed by the Missouri Division of Family Services or Missouri Department of Mental Health to provide foster care to one (1) or more, but less than seven (7), children who are unrelated to either foster parent by blood, marriage or adoption, provided that all applicable building and safety codes are met and an occupancy permit is issued therefor.

(c) *Permitted uses (accessory).*

(1) Private garages, carports and accessory buildings, as permitted in section 30-403, supplemental regulations.

(2) Home occupations, as permitted in section 30-405, supplemental regulations.

(3) Home day cares, with no more than (4) unrelated children in a twenty-four (24) hour period, as permitted in section 30-408, supplemental regulations.

(4) In home elderly care, with a maximum of three (3) persons as permitted in section 30-411, supplemental regulations.

(5) Solar energy systems, as permitted in section 30-410, supplemental regulations.

(d) *Special uses.*

(1) Personal service establishments including, but not limited to, beauty parlors, barber shops, dry cleaning and laundry pick-up, shoe repair, self-service laundromats, express or mailing offices.

(2) Retail establishments which supply convenience and specialized goods and services, including, but not limited to, groceries, bakery, package liquor, books, candy, dairy products, drugs, flowers, gifts, jewelry, hobby materials, meat, fish and poultry, news stands, wearing apparel, shoes, clothing, toys, pipe and tobacco and video rental.

(3) Restaurants and bars, excluding drive-in, pick-up, or drive-thru facilities.

(4) Pet grooming with sales of pet grooming products. The following are prohibited: overnight pet stays, the sale or breeding of pets, and kennels.

(5) Offices.

(6) Public utilities, except for buildings and accessory structures that are normal and customary in a zoning district which would allow other buildings of the same nature as a use-by-right.

(e) *Standards.*

(1) No individual retail store, personal service establishment or other permitted use shall have a gross floor area greater than three thousand five hundred (3,500) square feet.

(2) Utilitarian areas such as loading docks, mechanical equipment, storage areas and dumpsters shall be located at the rear of the building and properly screened as required in chapter 25 of the City Code.

(3) All structures in this district shall be constructed using materials, surfaces, textures, and colors that are compatible with the surrounding residential development. Consideration shall also be given to the scale, orientation and proportion of surrounding development. Design review shall be performed as part of the site plan review.

(4) Lighting shall be designed to be directed away from any adjacent residential area.

(f) *Height, area, bulk and setback requirements.*

(1) *Maximum Height:*

a. When side yards are less than fifteen (15) feet in width, two and one-half (2½) stories not to exceed thirty-five (35) feet.

b. When side yards are fifteen (15) feet in width or greater, three (3) stories, not to exceed forty-five (45) feet.

(2) *Minimum Lot Area:*

a. Each townhouse must be on a separate platted lot consisting of at least one thousand four hundred (1,400) square feet.

b. Duplexes, three thousand seven hundred fifty (3,750) square feet per unit.

c. Single-family, five thousand (5,000) square feet.

d. Multifamily, three thousand seven hundred fifty (3,750) square feet.

(3) *Maximum Density:* Twelve (12) units per one (1) acre. Higher densities may be approved with a cluster subdivision as permitted in chapter 25 of the City Code.

(4) *Minimum Lot Width:*

a. *Each townhouse:* Twenty (20) feet.

b. *Each duplex:* Twenty (20) feet.

c. *All other uses:* Thirty (30) feet.

(5) *Minimum Yard Requirements:*

a. *Front yard:*

1. *Each townhouse:* Ten (10) feet.

2. *All other uses:* Twenty (20) feet.

b. *Rear yard:*

1. *Each townhouse:* Twenty (20) feet.

2. *All other uses:* Twenty (20) feet.

c. *Side yard:*

1. *Each townhouse:* None.

2. *All other uses:* Three (3) feet.

(g) *Open space, landscaping and bufferyard requirements.*

(1) A minimum of twenty (20) percent of the total lot area shall be devoted to open space, including required yard and bufferyards.

(2) Landscaping shall be provided as required in chapter 25 of the City Code.

(3) A twenty-foot wide bufferyard shall be required adjacent to any property in the AG, AG-1, RE, R-1, R-2 or R-3 zoning districts. This bufferyard shall comply with the requirements of chapter 25 of the City Code.

(h) *Parking regulations.* Off-street parking and loading spaces shall be provided in accordance with the requirements for specific uses set forth in section 25-202. No parking, stopping, or standing of trucks or commercial motor vehicles licensed for a gross weight in excess of twenty-four thousand (24,000) pounds, except as provided in sections 26-137 and 26-256 of the Code of Ordinances.

(Ord. No. 4109, art. 2, 3-1-10; Ord. No. 4149, art. 4, 8-16-10; Ord. No. 4206, arts. 7, 13, 14, 3-7-11)

## Sec. 30-328. RMH, residential manufactured home district.

(a) *Purpose.* The residential manufactured home district [RMH] is established to provide for the placement of manufactured homes in manufactured housing communities, at maximum residential densities of eight (8) units per acre. It is intended that such manufactured housing communities shall be so located, designed and improved as to provide: a desirable residential environment, protection from potentially adverse neighboring influences, protection for adjacent residential properties, principal access for vehicular traffic to collector or arterial streets, and accessibility to public facilities, places of employment and facilities for meeting commercial and service needs not met within the manufactured housing community. Certain other residential and supporting uses are also allowed in such district.

(b) *Permitted uses.*

(1) Manufactured homes, including mobile homes, on subdivided individual building lots, with only one (1) home per lot.

(2) Manufactured homes on rented lots.

(3) Police and fire stations.

(4) Noncommercial, not-for-profit residential neighborhood facilities consisting of indoor and outdoor recreational facilities, offices of property owners associations and maintenance facilities operated by a neighborhood or community organization or a property owners association.

(c) *Permitted uses (accessory).*

(1) Private garages, carports and accessory buildings as permitted in section 30-403, supplemental regulations.

(2) One (1) single-family detached dwelling per each manufactured housing community.

(3) Home day cares, with not more than four (4) unrelated children, as permitted in section 30-408, supplemental regulations.

(4) Home occupations, as permitted in section 30-405, supplemental regulations.

(5) Solar energy systems, as permitted in section 30-410, supplemental regulations.

(d) *Special uses.*

(1) Additional single-family detached dwellings.

(2) Wind energy conversion systems, as permitted in section 30-410, supplemental regulations.

(3) Public utilities, except for buildings and accessory structures that are normal and customary in a zoning district which would allow other buildings of the same nature as a use-by-right.

(e) *Height, area, bulk and setback requirements on subdivided individual lots.*

(1) *Maximum Height:* Two and one-half (2½) stories not to exceed thirty-five (35) feet.

(2) *Minimum Lot Area:* Five thousand (5,000) square feet.

(3) *Minimum District Size:* Ten (10) acres.

(4) *Maximum Density:* Eight (8) units per acre.

(5) *Minimum Lot Width:* Forty-five (45) feet.

(6) *Minimum Lot Depth:* Seventy-five (75) feet.

(7) *Minimum Yard Requirements:*

a. *Front yard:* Twenty-five (25) feet.

b. *Rear yard:* Twenty (20) feet.

c. *Side yard:* Five (5) feet.

(8) *Maximum Building Coverage, including accessory building:* Forty (40) percent.

(9) *Minimum Open Space:* Twenty-five (25) percent of the total lot area shall be devoted to open space, including required yards and bufferyards.

(f) *Height, area, bulk and setback requirements in manufactured housing development (mobile home park).*

(1) *Maximum Height:* Two and one-half (2½) stories not to exceed thirty-five (35) feet.

(2) *Minimum Lot Area:* Three thousand four hundred (3,400) square feet.

(3) *Minimum District Size:* Ten (10) acres.

(4) *Maximum Density:* Eight (8) units per acre.

(5) *Minimum Lot Width:* Forty-five (45) feet.

(6) *Minimum Lot Depth:* Seventy-five (75) feet.

(7) *Maximum Building Coverage, including accessory building:* Forty (40) percent.

(g) *Design requirements.*

(1) *Subdivided lots and rented lots in a mobile home park.*

a. A site plan meeting the requirements of chapter 25 of the City Code shall be submitted and approved.

1. There shall not be less than fifteen (15) feet between manufactured homes or any other buildings, other than accessory structures.

2. Any improvements necessary on the lot for the support or anchoring of the manufactured home shall be provided prior to occupancy.

b. The manufactured home shall be in compliance with Federal Manufactured Home Construction and Safety Standards, adopted June 15, 1976, as amended, and Missouri Public Service Commission rules.

c. A minimum of twenty-four (24) inches of crawl space under the entire manufactured home shall be maintained.

d. The unit shall be served by water, sewage disposal system, and electrical service in accordance with the International Plumbing Code and National Electric Code.

e. Storage of maintenance or other equipment incidental to a permitted or special use shall be screened from view in accordance with chapter 25 of the City Code.

f. Accessory buildings and structures shall meet the requirements of section 30-403, supplemental regulations.

(2) *Subdivided lots, only.*

a. Manufactured homes on individual subdivided lots shall be permanently installed on a properly designed, enclosed foundation in accordance with the International Building Code (IBC). All wheels, springs, axles, lights and towing apparatus shall be removed.

b. Permanent steps on subdivided lots shall be set at all external exits with appropriate hand rails and/or guard rails.

c. Parking spaces for each manufactured home shall be provided on each lot, as per chapter 25 of the City Code.

(3) *Rented lots in a mobile home park, only.*

a. Skirting shall be placed around manufactured homes that are not placed on a permanent foundation. Such skirting shall be similar in appearance to materials used for the siding of the manufactured home to which it is to be attached.

b. Refuse storage shall be screened from view in accordance with chapter 25 of the City Code.

c. Two (2) parking spaces for each manufactured home shall be provided on each lot; however, one (1) of these two (2) required parking spaces may be located within one hundred (100) feet of the lot served.

(h) *Open space, landscaping and bufferyard requirements.*

(1) A minimum of twenty-five (25) percent of the total lot area shall be devoted to open space, including required yard and bufferyards.

(2) Landscaping shall be provided as required in chapter 25 of the City Code.

(3) A twenty-foot wide bufferyard shall be required adjacent to any property in any other zoning district. This bufferyard shall comply with the requirements of chapter 25 of the City Code.

(i) *Parking regulations.* Off-street parking and loading spaces shall be provided in accordance with the requirements for specific uses set forth in section 25-202. No parking, stopping, or standing of trucks or commercial motor vehicles licensed for a gross weight in excess of twenty-four thousand (24,000) pounds, except as provided in sections 26-137 and 26-256 of the Code of Ordinances.

(Ord. No. 4109, art. 2, 3-1-10; Ord. No. 4149, art. 4, 8-16-10; Ord. No. 4206, arts. 7, 3-7-11)

## Sec. 30-330. Commercial and manufacturing/industrial districts.

## Sec. 30-331. NC, neighborhood commercial district.

(a) *Purpose.* This district is intended to provide small, convenient retail/commercial services and offices that provide convenience goods or personal service primarily to people residing in adjacent residential areas. This district is designed to accommodate compact, commercial uses in residential neighborhoods at intersections or along major streets, or to function as a transition between more intense commercial uses and neighborhoods. Additional requirements for light, air, building design, open space and landscaping are required to alleviate any adverse impact on surrounding neighborhoods.

(b) *Permitted uses.*

(1) Commercial day care.

(2) Personal service establishments including, but not limited to, beauty parlors, barber shops, dry cleaning and laundry pick-up, shoe repair, self-service laundromats, express or mailing offices, and hearing aid and eye glass shops.

(3) Police and fire stations.

(4) Public parks, playgrounds and recreational facilities.

(5) Residential uses, provided such uses are located above the first floor or behind nonresidential uses so as to promote continuous nonresidential uses on the first floor level along street frontages.

(6) Restaurants and bars, excluding drive-in, pick-up or drive-thru facilities.

(7) Retail establishments which supply convenience and specialized goods and services, including, but not limited to: groceries, bakery, package liquor, books, candy, dairy products, drugs, flowers, gifts, jewelry, hobby materials, meat, fish and poultry, news stands, wearing apparel, shoes, clothing, toys, pipe and tobacco and video rental.

(8) Pet grooming, with sales of pet grooming products allowed as an accessory use. The following uses are not accessory to this use and are prohibited: overnight pet stays, the sale or breeding of pets, kennels, veterinarian services, runs and outside facilities.

(9) Finance, insurance and real estate services including, but not limited to, banks, insurance offices and security brokers. Banks and financial institutions may include automatic teller machines and drive-thru facilities with a maximum of two (2) teller stations or lanes.

(c) *Permitted uses (accessory).*

(1) Accessory buildings and uses customarily incidental to the above uses including, but not limited to, garages, and dumpster storage facilities as permitted in section 30-403, supplemental regulations.

(2) Solar energy systems, as permitted in section 30-410, supplemental regulations.

(d) *Special uses.*

(1) School and studios for art, dancing, drama, music, photography, interior decorating or similar courses of study.

(2) Vehicle fueling station, not including service and repair.

(3) The allowance of additional height, not to exceed thirty-five (35) feet, as long as additional height does not adversely affect the surrounding neighborhood.

(4) Wind energy conversion systems, as permitted in section 30-410, supplemental regulations.

(5) Public utilities, except for buildings and accessory structures that are normal and customary in a zoning district which would allow other buildings of the same nature as a use-by-right.

(e) *Standards.*

(1) A site plan, meeting the requirements of chapter 25 of the City Code shall be submitted and approved.

(2) Buildings shall be designed in individual or small groupings and shall not exceed sixteen thousand (16,000) square feet per structure with a maximum foot print of ten thousand (10,000) square feet, nor exceed two (2) stories in height, except as provided with a special use permit. The commercial development shall be designed and sized in a manner which is architecturally, aesthetically and operationally harmonious with surrounding development.

(3) No individual retail store, personal service establishment or other permitted use shall have a gross floor area greater than five thousand (5,000) square feet.

(4) All activities and permitted uses except off-street parking and loading facilities, drive-thru facilities, public parks and play grounds, day care activities, outdoor eating and drinking facilities and outdoor music, shall be conducted entirely within a completely enclosed building.

(5) Utilitarian areas such as loading docks, mechanical equipment, storage areas and dumpsters shall be located at the rear of the building and properly screened as required in chapter 25 of the City Code.

(6) Streets through adjacent residential areas shall not be used to provide principal access for truck traffic to any nonresidential use in this district except on streets classified as arterials, or collectors.

(7) All structures in a NC district shall be constructed using materials, surfaces, textures, and colors that are compatible with the surrounding development. Design review shall be performed as part of the site plan review required in chapter 25 of the City Code.

(8) Lighting shall be designed to be directed away from any adjacent residential area and in accordance with chapter 25 of the City Code.

(f) *Height, area, bulk and setback requirements.*

(1) *Maximum Height:* Two (2) stories not to exceed twenty-five (25) feet.

(2) *Minimum Lot Area:* None.

(3) *Maximum Density:* None.

(4) *Maximum Floor Area:* Sixteen thousand (16,000) square feet.

(5) *Minimum Lot Width:* None.

(6) *Minimum Yard Requirements:*

a. *Front yard:* Twenty-five (25) feet.

b. *Rear yard:* Twenty (20) percent of the lot depth or ten (10) feet, whichever is greater. No more than twenty-five (25) feet shall be required.

c. *Side yard:* None, except where located adjacent to residential uses, then ten (10) feet.

(7) *Maximum Building Coverage, including accessory buildings:* Thirty-five (35) percent of the lot.

(g) *Open space, landscaping and bufferyard requirements.*

(1) A minimum of twenty (20) percent of the total lot area shall be devoted to open space, including required yard and bufferyards.

(2) Landscaping shall be provided as required in chapter 25 of the City Code.

(3) A twenty-foot wide bufferyard shall be required adjacent to any property in the AG, AG-1, RE, R-1, R-2 or R-3 zoning districts. This bufferyard shall comply with the requirements of chapter 25 of the City Code.

(h) *Parking regulations.* Off-street parking and loading spaces shall be provided in accordance with the requirements for specific uses set forth in section 25-202. No parking, stopping, or standing of trucks or commercial motor vehicles licensed for a gross weight in excess of twenty-four thousand (24,000) pounds, except as provided in sections 26-137 and 26-256 of the Code of Ordinances.

(Ord. No. 4109, art. 2, 3-1-10; Ord. No. 4149, art. 4, 8-16-10; Ord. No. 4206, arts. 7, 15, 3-7-11)

## Sec. 30-332. CBD, central business district.

(a) *Purpose.* The central business district [CBD] provides for the development of high density, compact, pedestrian oriented shopping, office, service, entertainment and residential districts. The districts are intended to be mixed-use districts that accommodate a variety of uses. It is intended specifically for the older downtown areas including: Broadway, Riverfront and Good Hope/Haarig areas of the City of Cape Girardeau. It is intended to allow flexible setbacks, smaller lot sizes, and increased lot coverage to encourage dense development in the urban core of the community. This district is designed to protect the small community appeal, integrity, character, and charm within the central business district by encouraging redevelopment that focuses on architecturally appropriate design standards typical of the city's early development history. These areas may also be experiencing or be in need of rehabilitation or redevelopment. This district is intended to accommodate the transition that must occur if these areas are to continue to contribute to the vitality of the city. The regulations of the central business district are intended to allow greater flexibility for tracts of land in the central business district than is permitted by other district regulations, where the planned development of such tracts would better reflect the character of the site and enhance the appearance and economic vitality of the downtown area.

(b) *Permitted uses.*

(1) Any business that provides, displays, advertises and sells goods, supplies or services to the general public, as long as all activities associated with said business are contained entirely indoors as stated in the standards set forth in section 30-332(e)(2).

(2) General retail and office, including banks and financial institutions.

(3) Any governmental building, including police and fire stations.

(4) Residential uses.

(5) Hotels.

(6) Medical facilities.

(7) Health and fitness centers.

(8) Public parks, playgrounds and recreational facilities.

(9) Private institutions of higher education.

(10) Nursing homes, senior citizen housing or retirement homes.

(11) Commercial day cares.

(12) Microbrewery.

(13) Bed and breakfasts.

(14) Restaurants, bars.

(c) *Permitted uses (accessory).*

(1) Accessory buildings and uses customarily incidental to the above uses including, but not limited to, garages, and dumpster storage facilities as permitted in section 30-403, supplemental regulations.

(2) Solar energy systems, as permitted in section 30-410, supplemental regulations.

(d) *Special uses.*

(1) Helicopter landing pad, heliport or other landing areas in relationship with medical facilities.

(2) Telecommunication tower, as permitted in section 30-404, supplemental regulations.

(3) Marina or dock.

(4) The allowance of additional height, not to exceed sixty (60) feet or five (5) stories.

(5) Excursion gambling boat or floating gambling facility, as permitted in section 30-409, supplemental regulations.

(6) Wind energy conversion systems, as permitted in section 30-410, supplemental regulations.

(7) Public utilities, except for buildings and accessory structures that are normal and customary in a zoning district which would allow other buildings of the same nature as a use-by-right.

(e) *Standards.*

(1) All activities and permitted uses except the following shall be conducted entirely within a closed building.

a. Off-street parking and loading facilities.

b. Banks and financial institutions including automatic teller machines and drive-thru facilities with a maximum of two (2) teller stations or lanes.

c. Outdoor eating and drinking facilities.

d. Public parks, playgrounds and recreational facilities.

e. Outdoor live or amplified music provided that they are in compliance with the city's nuisance ordinance.

(2) All activities and permitted uses except the following shall be conducted entirely within a closed building.

a. Off-street parking and loading facilities.

b. Banks and financial institutions including automatic teller machines and drive-thru facilities with a maximum of two (2) teller stations or lanes.

c. Outdoor eating and drinking facilities.

d. Public parks, playgrounds and recreational facilities.

e. Outdoor live or amplified music provided that they are in compliance with the city's nuisance ordinance.

(3) Alteration of existing buildings:

a. Original window openings on public facing elevations should be maintained or retained.

b. Original upper story design details and features shall not be removed or obscured.

(4) New construction shall be compatible with the existing buildings in scale, height, materials, massing and rhythm and proportion of openings.

(5) Storefronts shall maintain traditional size, shape, spacing, patterns and alignment of openings of storefronts.

(6) The primary entrance for commercial buildings shall be oriented toward the street.

(7) Building setbacks:

a. *Residential:* Should be aligned by a uniform distance from sidewalks.

b. *Commercial:* Maintain alignment of facades along sidewalks.

(8) Height:

a. The height of additions or new construction should be within a similar range of the buildings in the surrounding blocks.

b. Corner buildings or buildings on the ends should be similar in height to buildings on adjoining corners.

(9) Materials that are comparable in quality, color, texture, finish and dimension to existing materials and buildings within the district should be used.

(10) Consistent rooflines should be maintained with adjacent buildings.

(f) *Height, area, bulk and setback requirements.*

(1) *Maximum Height:* Three (3) stories not to exceed forty (40) feet.

(2) *Minimum Lot Area:* None.

(3) *Minimum Lot Width:* None.

(4) *Maximum Density:* None.

(5) *Minimum Yard Requirements:*

a. *Front yard:* None, except fifteen (15) feet when across from a residential zoning district.

b. *Rear yard:* None, except fifteen (15) feet when adjacent to a residential zoning district.

c. *Side yard:* None, except fifteen (15) feet when adjacent to a residential zoning district.

(6) *Maximum Building Coverage, including accessory buildings:* One hundred (100) percent of the lot.

(g) *Open space, landscaping and bufferyard requirements.*

(1) Open space requirements: No minimum percentage required.

(2) Landscaping shall be provided as required in chapter 25 of the City Code.

(3) A twenty-foot wide bufferyard shall be required adjacent to any property in the AG, AG-1, RE, R-1, R-2 or R-3 zoning districts. This bufferyard shall comply with the requirements of chapter 25 of the City Code.

(h) *Parking regulations.* Off-street parking and loading spaces shall be provided in accordance with the requirements for specific use set forth in section 25-202

(Ord. No. 4109, art. 2, 3-1-10; Ord. No. 4149, art. 4, 8-16-10; Ord. No. 4206, arts. 8, 16—19, 3-7-11)

## Sec. 30-333. C-1, general commercial district.

(a) *Purpose.* The general commercial district [C-1] is to provide for the development of commercial enterprise that may be oriented toward the use of automobiles, in practice or in design. These uses should be destination retail and commercial spaces that provide essential retail and service businesses to the community and region, and that provide a diversified economy for the greater Cape Girardeau area. The height of buildings and uses should not adversely affect the adjacent neighborhood.

(b) *Permitted uses.*

(1) Offices: administrative, business, finance and professional.

(2) Retail, not including vehicle sales.

(3) Restaurants and bars, including drive-thru.

(4) Health and fitness centers.

(5) Public parks, playgrounds and recreational facilities.

(6) Funeral homes and mortuaries.

(7) Medical facilities.

(8) Police and fire stations.

(9) Private institutions of higher education.

(10) Nursing homes, senior citizen housing, and retirement homes.

(11) Commercial day cares.

(12) Banks and financial institutions, including drive-thru.

(13) Residential treatment facilities.

(c) *Permitted uses (accessory).*

(1) Accessory buildings and uses customarily incidental to the above uses, as permitted in section 30-403, supplemental regulations.

(2) Helicopter landing pad, heliport or other landing area in relationship with medical facilities.

(3) Solar energy systems, as permitted in section 30-410, supplemental regulations.

(d) *Special uses.*

(1) Vehicle washing businesses, including automatic, coin-operated, and moving-line facilities.

(2) Vehicle fueling stations, including service and repair.

(3) Hotels.

(4) The allowance of additional height, not to exceed a total height of sixty (60) feet, as long as the additional height does not adversely affect the surrounding neighborhood.

(5) Mini warehouse or self-storage units.

(6) Transitional housing.

(7) Telecommunication tower, as permitted in section 30-404, supplemental regulations.

(8) Wind energy conversion systems, as permitted in section 30-410, supplemental regulations.

(9) Public utilities, except for buildings and accessory structures that are normal and customary in a zoning district which would allow other buildings of the same nature as a use-by-right.

(e) *Standards.*

(1) All storage of materials, products or equipment shall be within a fully enclosed building or in an open yard so screened that the materials, products or equipment are not visible from the street or any adjoining property.

(2) The seasonal display of nursery stock and accessory landscaping decorations, seasonal decorations and decorative items shall be allowed, in accordance with the following provisions:

a. Daily displays shall be set up only during normal business hours, except that overnight displays shall be allowed for seasonal merchandise.

b. Long term storage of such products shall be prohibited.

c. Displays shall not alter the structure of the building.

d. Displays shall not be located within ten (10) feet of the primary entrance or exit.

e. Displays shall be located wholly on privately owned property, with the owner's permission.

f. Displays shall not impede pedestrian or vehicular access to the building or site.

g. Displays shall be well-kept and orderly.

(3) Utilitarian areas such as loading docks, mechanical equipment, storage areas and trash enclosures shall be located at the rear or side of the building and screened as required in chapter 25 of the City Code.

(f) *Height, area, bulk and setback requirements.*

(1) *Maximum Height:* Three (3) stories not to exceed forty (40) feet.

(2) *Minimum Lot Area:* None.

(3) *Minimum Lot Width:* None.

(4) *Maximum Density:* None.

(5) *Minimum Yard Requirements:*

a. *Front yard:* Twenty-five (25) feet.

b. *Rear yard:* Twenty-five (25) feet.

c. *Side yard:* No side yard requirement for nonresidential buildings except that on a lot abutting a residential district there shall be a side yard of not less than five (5) feet on the side of the lot abutting the residential district. Side yards for dwellings shall be not less than five (5) feet.

(6) *Maximum Building Coverage, including accessory buildings:* Fifty (50) percent of the lot.

(g) *Open space, landscaping and bufferyard requirements.*

(1) Open space: No minimum percentage required.

(2) Landscaping shall be provided as required in chapter 25 of the City Code.

(3) A twenty-foot wide bufferyard shall be required adjacent to any property in the AG, AG-1, RE, R-1, R-2, R-3, R-4, R-5, RUMD and RMH zoning districts. This bufferyard shall comply with the requirements of chapter 25 of the City Code.

(h) *Parking regulations.* Off-street parking and loading spaces shall be provided in accordance with the requirements for specific uses set forth in section 25-202

(Ord. No. 4109, art. 2, 3-1-10; Ord. No. 4149, art. 4, 8-16-10; Ord. No. 4206, arts. 8, 20, 3-7-11)

## Sec. 30-334. C-2, highway commercial district.

(a) *Purpose.* The highway commercial district [C-2] is established to provide primarily for automobile-dependent uses in areas which are not amenable to easy pedestrian access and a comfortable pedestrian environment. This district is intended for commercial uses which depend upon high visibility, general high traffic volumes, or cater to the traveling public. It is expected that the highway commercial district will not only serve the City of Cape Girardeau, but interstate and intrastate travelers as well. These characteristics dictate that these districts be located along or at the intersections of arterial classification streets or along frontage roads adjacent to an interstate highway or other limited access roads. Because of the scale and access requirements of the uses in this category, they are generally associated with, or located along major transportation routes.

(b) *Permitted uses.*

(1) Vehicle fueling station, including service and repair.

(2) Restaurants and bars, including drive-thru.

(3) Hotels.

(4) Public parks, playgrounds and recreational facilities.

(5) Office, administrative, business, finance and professional.

(6) Retail, including vehicle sales.

(7) Health and fitness centers.

(8) Funeral homes and moratoriums.

(9) Medical facilities.

(10) Police and fire stations.

(11) Private institutions of higher education;

(12) Nursing homes, senior citizen housing or retirement homes.

(13) Commercial day cares.

(14) Microbrewery.

(15) Miniwarehouse or self-storage units.

(16) Theaters.

(17) Warehouses.

(18) Banks and financial institutions, including drive-thru.

(19) Veterinary clinics, animal hospitals and kennels.

(20) Residential treatment facilities.

(21) Transitional housing.

(c) *Permitted uses (accessory).*

(1) Accessory buildings and uses customarily incidental to the above uses, as permitted in section 30-403, supplemental regulations.

(2) Helicopter landing pad, heliport or other landing area in relationship with medical facilities.

(3) Solar energy systems, as permitted in section 30-410, supplemental regulations.

(4) Outdoor storage of materials that are for sale.

(d) *Special uses.*

(1) Automobile washing businesses, including automatic, coin-operated, moving-line facilities.

(2) The allowance of additional height, not to exceed a total of one hundred (100) feet, as long as additional height does not adversely affect surrounding neighborhood.

(3) Campground facilities and travel trailer parks.

(4) Commercial amusement park.

(5) Telecommunication tower, as permitted in section 30-404, supplemental regulations.

(6) Wind energy conversion systems, as permitted in section 30-410, supplemental regulations.

(7) Billboards, as permitted in section 25-401

(8) Public utilities, except for buildings and accessory structures that are normal and customary in a zoning district which would allow other buildings of the same nature as a use-by-right.

(e) *Height, area, bulk and setback requirements.*

(1) *Maximum Height:* Five (5) stories not to exceed sixty (60) feet. Buildings can exceed the maximum height and stories in the C-2 district upon a special use permit being granted.

(2) *Minimum Lot Area:* None.

(3) *Minimum Lot Width:* None.

(4) *Maximum Density:* None.

(5) *Minimum Yard Requirements:*

a. *Front yard:* Twenty-five (25) feet.

b. *Rear yard:* None, except twenty-five (25) feet when abutting a residential district.

c. *Side yard:* No side yard requirement for nonresidential buildings except that on a lot abutting a residential district there shall be a side yard of not less than twenty-five (25) feet on the side of the lot abutting the residential district.

(6) *Maximum Building Coverage, including accessory buildings:* Eighty (80) percent of the lot.

(f) *Standards.*

(1) A site plan, meeting the requirements of chapter 25 of the City Code shall be submitted and approved.

(2) All off-street parking lots and vehicular use areas shall be screened from all residential uses in accordance with chapter 25 of the City Code.

(3) Utilitarian areas such as loading docks, mechanical equipment, storage areas and dumpsters shall be located at the rear or side of the building and properly screened, as required in chapter 25 of the City Code.

(4) Lighting shall be designed to reflect away from any adjacent residential area, in accordance with chapter 25 of the City Code.

(g) *Open space, landscaping and bufferyard requirements.*

(1) Open space: No minimum percentage required.

(2) Landscaping shall be provided as required in chapter 25 of the City Code.

(3) A twenty-foot wide bufferyard shall be required adjacent to any property in the AG, AG-1, RE, R-1, R-2, R-3, R-4, R-5, RUMD and RMH zoning district. This bufferyard shall comply with the requirements of chapter 25 of the City Code.

(h) *Parking regulations.* Off-street parking and loading spaces shall be provided in accordance with the requirements for specific uses set forth in section 25-202

(Ord. No. 4109, art. 2, 3-1-10; Ord. No. 4149, art. 4, 8-16-10; Ord. No. 4206, arts. 8, 21, 22, 3-7-11)

## Sec. 30-335. M-1, light manufacturing/industrial district.

(a) *Purpose.* This district is intended primarily for uses engaged in light manufacturing, assembly, fabrication, warehousing, wholesaling and retail trade, and service operations which conduct all activities within a building with no external impact or effect. This district is intended to serve as a transition between more intense industrial development and commercial, office, or multifamily residential development.

(b) *Permitted uses.*

(1) Light manufacturing facilities.

(2) Any establishment which provides supplies or services primarily to commercial and industrial customers, such as janitorial services, sign shops, packaging or shipping services, locksmiths, or printing, lithographing, engraving, photocopying, blueprinting, publishing, electrical, heating, plumbing and binding establishments.

(3) Health and fitness centers.

(4) Cemeteries.

(5) Commercial day cares.

(6) Funeral homes and mortuaries.

(7) Government buildings and uses, including police and fire stations.

(8) Heavy machinery and equipment sales, rental and service.

(9) Offices, administrative, business, finance and professional.

(10) Public and private parks, playgrounds, and golf courses, including miniature golf courses and driving ranges.

(11) Public service and public utility uses as follows:

a. Wireless facilities.

b. Water reservoirs, water standpipes, and elevated and ground-level water storage tanks.

(12) Industrial schools and business schools.

(13) Miniwarehouse or self-storage units.

(14) Residential treatment facilities.

(15) Television and radio studios including any transmitting facilities.

(16) Veterinary clinics, animal hospitals, and kennels.

(17) Warehouses, storage and distribution centers.

(18) Vehicle fueling stations, including service, repair, body and fender repair, and paint shops.

(19) Recycling centers.

(20) Marina or dock.

(21) Transitional housing.

(22) Restaurants and bars.

(23) Retail, including vehicle sales.

(c) *Permitted uses (accessory).*

(1) Dwelling or lodging units, but only for watchman, caretakers, or other personnel whose residence is essential to the operation of a permitted or special use.

(2) Accessory buildings and uses customarily incidental to the above uses, as permitted in section 30-403, supplemental regulations.

(3) Solar energy systems, as permitted in section 30-410, supplemental regulations.

(d) *Special uses.*

(1) Emergency shelters, transitional service shelters for fifty (50) or fewer residents.

(2) Single-wide or double-wide, manufactured home or manufactured business unit for office purposes only.

(3) Telecommunication tower, as permitted in section 30-404, supplemental regulations.

(4) Excursion gambling boat or floating gambling facility, as permitted in section 30-409, supplemental regulations.

(5) Wind energy conversion systems, as permitted in section 30-410, supplemental regulations.

(6) Billboards, as permitted in section 25-401

(7) Public utilities, except for buildings and accessory structures that are normal and customary in a zoning district which would allow other buildings of the same nature as a use-by-right.

(e) *Standards.*

(1) A site plan, meeting the requirements of chapter 25 of the City Code shall be submitted and approved.

(2) All storage shall be within a fully enclosed building or in an open yard so screened that the materials, products or equipment are not visible from the street or adjoining property. Any outdoor storage shall be at least one hundred (100) feet from any residential zoning district or use.

(3) No building shall be used for residential purposes, except for a night watchman or a caretaker employed on the premises.

(4) Utilitarian areas such as loading docks, mechanical equipment, storage areas, mechanical and electrical equipment, and dumpsters shall be located in the rear or side yard of the building.

(5) Lighting shall be designed to shine and reflect away from any adjacent residential areas and shall meet the requirements of chapter 25 of the City Code.

(f) *Height, area, bulk and setback requirements.*

(1) *Maximum Height:* Forty (40) feet excluding silos, smoke stacks, and dust collection systems.

(2) *Minimum Lot Area:* None.

(3) *Minimum Lot Width:* None.

(4) *Minimum Yard Requirements:*

a. F*ront yard:* Twenty-five (25) feet.

b. *Rear yard:* Twenty-five (25) feet.

c. *Side yard:* None, except on a lot abutting a residential district there shall be a side yard of not less than ten (10) feet on the side of the lot abutting the residential district.

(5) *Maximum Building Coverage:* None.

(g) *Open space, landscaping and bufferyard requirements.*

(1) A minimum of fifteen (15) percent of the total lot area shall be devoted to open space, including required yard and bufferyards.

(2) Landscaping shall be provided as required in chapter 25 of the City Code.

(3) A twenty-foot wide bufferyard shall be required adjacent to any property in the AG, AG-1, RE, R-1, R-2, R-3, R-4, R-5, RUMD and RMH zoning districts. This bufferyard shall comply with the requirements of chapter 25 of the City Code.

(h) *Parking regulations.* Off-street parking and loading spaces shall be provided in accordance with the requirements for specific uses set forth in section 25-202

(Ord. No. 4109, art. 2, 3-1-10; Ord. No. 4149, art. 4, 8-16-10; Ord. No. 4206, arts. 8, 23, 24, 3-7-11)

## Sec. 30-336. M-2, heavy manufacturing/industrial district.

(a) *Purpose.* This district is intended for heavy industrial uses and many other uses which are not otherwise provided for in the other industrial district. The intensity of uses permitted in this district makes it necessary to separate it from all residential districts, whenever possible. Good accessibility should be provided to major rail, air facilities and highways.

(b) *Permitted uses.*

(1) Manufacturing, fabrication, assembly, processing, or packaging of any commodity, except: facilities producing or processing explosives or flammable gases or liquids; animal slaughtering, meat packing, or rendering; sulphur plants, rubber reclamation plants, steel mills, foundries or smelters.

(2) Any establishment which provides supplies or services primarily to commercial and industrial customers, such as janitorial services, sign shops, packaging or shipping services, locksmiths, or printing, lithographing, engraving, photocopying, blueprinting, publishing and binding establishments.

(3) Any manufacturing, production, processing, cleaning, servicing, testing, repair or storage of materials, goods or products, and any business and sales offices accessory thereto.

(4) Bulk storage of flammable liquids for wholesale, subject to the provisions of the city and state fire codes.

(5) Central mixing plants for cement, asphalt, or paving material.

(6) The extraction of sand, gravel, and other raw materials requiring the removal of an overburden above the deposit, however, any bulk storage of extraction material or overburden, any processing or extraction machinery, and the open face of any cut, shall be at least twenty-five (25) feet from the property line.

(7) Heavy machinery and equipment sales, rental and service.

(8) Junk yards, scrap and salvage yards.

(9) Manufacturing and production of paving, roofing and other construction material, using asphalt or petroleum based coatings or preserving materials.

(10) Primary and secondary metal industries that manufacture, produce, smelt or refine ferrous and nonferrous metals.

(11) Recycling center.

(12) Vehicle fueling stations, including service, repair, body and fender repair, and paint shops.

(13) Wastewater and water treatment facilities.

(14) Terminals for trucks, buses, rail and watercraft.

(15) Marina or dock.

(c) *Permitted uses (accessory).*

(1) Dwelling or lodging units, but only for watchman, caretakers, or other personnel whose residence is essential to the operation of a permitted or special use.

(2) Accessory buildings and uses customarily incidental to the above uses, as permitted in section 30-403, supplemental regulations.

(3) Solar energy systems, as permitted in section 30-410, supplemental regulations.

(d) *Special uses.*

(1) Collection and transfer facilities for hazardous wastes, and solid wastes that contain hazardous substances from off-site sources.

(2) Jails, prisons or detention facilities.

(3) Telecommunication tower, as permitted in section 30-404, supplemental regulations.

(4) Excursion gambling boat or floating gambling facility, as permitted in section 30-409, supplemental regulations.

(5) Wind energy conversion systems, as permitted in section 30-410, supplemental regulations.

(6) Billboards, as permitted in section 25-401

(7) Public utilities, except for buildings and accessory structures that are normal and customary in a zoning district which would allow other buildings of the same nature as a use-by-right.

(e) *Standards.*

(1) A site plan, meeting the requirements of chapter 25 of the City Code shall be submitted and approved.

(2) No junk yard, scrap, or salvage yard shall be located within five hundred (500) feet of any residential use.

(3) Lighting shall be designed to shine and reflect away from any adjacent residential areas and shall meet the requirements of chapter 25 of the City Code.

(f) *Height, area, bulk and setback requirements.*

(1) *Maximum Height:* Forty (40) feet, excluding silos, smoke stacks, and dust collection systems.

(2) *Minimum Lot Area:* None.

(3) *Minimum Lot Width:* None.

(4) *Minimum Yard Requirements:*

a. *Front yard:* Twenty-five (25) feet.

b. *Rear yard:* Twenty-five (25) feet.

c. *Side yard:* None, except on a lot abutting a residential district or use there shall be a side yard of not less than twenty (20) feet on the side of the lot abutting the residential district or use.

(5) *Maximum Building Coverage:* None.

(g) *Open space, landscaping and bufferyard requirements.*

(1) A minimum of fifteen (15) percent of the total lot area shall be devoted to open space, including required yard and bufferyards.

(2) Landscaping shall be provided as required in chapter 25 of the City Code.

(3) A twenty-foot wide bufferyard shall be required adjacent to any property in the AG, AG-1, RE, R-1, R-2, R-3, R-4, R-5, RUMD, RMH and C-1 zoning districts. This bufferyard shall comply with the requirements of chapter 25 of the City Code.

(h) *Parking regulations.* Off-street parking and loading spaces shall be provided in accordance with the requirements for specific uses set forth in section 25-202

(Ord. No. 4109, art. 2, 3-1-10; Ord. No. 4149, art. 4, 8-16-10; Ord. No. 4206, arts. 8, 25, 26, 3-7-11)

## Sec. 30-340. Other districts.

## Sec. 30-341. PD, planned development district.

(a) *Purpose.* The purpose of the planned development district is to provide for greater flexibility in the development of land that is not possible to achieve in conventional zoning districts. This district is intended to encourage a more creative and innovative design and to promote a more desirable community. The objectives of the planned development district are:

(1) Promote site planning that better adapts to site conditions and surrounding properties.

(2) Allow for a diversity of uses permitted and variation in uses, structures, open space and height of structures.

(3) Promote the creation of open space areas and the preservation of natural features of a development site.

(4) Ensure efficient and effective traffic circulation.

Planned development districts can allow for flexibility in terms of density, uses and bulk regulations. These districts should be designed to lessen congestion in the streets, to secure public safety, to promote the health and general welfare of the public, to prevent the overcrowding of land, to preserve natural features, and to facilitate the adequate provision of transportation, water, sewage, schools and parks.

Approval of a planned development district, also known as a "PD district," shall constitute an amendment to the zoning ordinance. Designation of a property as a PD district in accordance with an approved development plan shall supersede all existing and prior zoning classifications. All properties receiving this designation shall for zoning purposes be identified by the letters "PD" followed by an identifying number. A development plan shall be approved in conjunction with the rezoning of a tract to the PD district. The development plan shall specify both for the project as a whole and for subareas within the project, as appropriate, those principal and accessory uses and development densities that are to be permitted. The city council may include or exclude uses from the development plan, or include uses with attached conditions as appropriate, to achieve the intent of these provisions. In making its determination of the uses and development densities to be permitted within the PD district, the council may consider the compatibility and relationship of uses within the project, the compatibility and relationship of permitted uses adjoining or in proximity to the PD district, the appropriateness of permitted uses for the area in general and their overall impact on the community, and the consistency of the permitted uses with other adopted plans and policies.

(b) *General standards.* The approved final development plan shall provide detail regarding density, lot dimensions, maximum height of structures, setbacks, and the provision of off-street parking and loading spaces. No planned development district shall be allowed which would result in:

(1) Inadequate or unsafe vehicular access;

(2) An undue burden on public parks, recreation areas, schools, or the provision of other city services;

(3) Substantial detriment to the surrounding area; or

(4) Otherwise create substantial adverse impacts on the public health, safety or welfare.

It shall be the responsibility of the applicant for a planned development district to demonstrate that the above factors are avoided or mitigated to a level that is acceptable to the city. Planned development districts are to be used solely for new development of vacant land or the redevelopment of existing commercial or residential uses. Planned development districts are not to be used to obtain approval for uses in existing development that are not permitted under the property's existing zoning district. Standards which vary from those contained in chapter 25, Development Code, may be approved in a preliminary development plan or final development plan. If approved, these variances would not need approval from the board of adjustment. Any use that requires a special use permit under a property's existing zoning district may be included as a use in the planned development district if it otherwise satisfies the requirement of the special use.

(c) *Minimum district size.* The minimum site size for a planned development (PD) district shall be three (3) acres.

(d) *Application and process.* An application for approval of a development plan and PD zoning may be filed by the owner of the property which is the subject of the application. Applications for PD district designation shall be processed pursuant to a three-step review process as specified in this section. The three-step process shall include:

(1) A sketch plan;

(2) A preliminary development plan; and

(3) A final development plan.

(e) *Sketch plan.* Prior to filing a preliminary development plan, the applicant shall prepare a sketch plan of the proposed planned development for review by the director of development services, and such other city staff as the director may desire. The director of development services shall coordinate sketch plan review of the proposed planned development. Upon completion of the sketch plan review, the director of development services shall provide the applicant with written comments with

respect to the proposed planned development and shall also provide such recommendations as may inform and assist the applicant in preparing an application for approval of a PD district.

(f) *Preliminary development plan.* The preliminary development plan is intended to provide the applicant with an opportunity to submit a plan showing the basic concept, character, and nature of the entire proposed planned development without becoming involved in the preparation of detailed development plans or engineering drawings. In order to permit the city and the applicant to proceed with some assurance, approval of the preliminary development plan binds the applicant and the city with respect to the following development constraints:

(1) Categories of uses to be permitted;

(2) Overall maximum density of residential uses and intensity of nonresidential uses;

(3) General location of vehicular and pedestrian circulation systems;

(4) General location and extent of public and private open space;

(5) General location of residential and nonresidential land uses; and

(6) Phasing of development.

(g) *Application for preliminary development plan.* Upon completion of the sketch plan requirements, an application for a preliminary development plan may be submitted. Five (5) copies of applications for approval of a preliminary development plan shall be submitted to the director of development services. The application for a preliminary development plan shall be in such form and shall contain such information and documentation as shall be prescribed from time to time by the director of development services in written rules, but shall in all instances contain at least the following information and documentation, which information and documentation, taken together, shall constitute a preliminary development plan:

(1) The applicant's name and contact information.

(2) The names and contact information of all professional consultants advising the applicant with respect to the proposed planned development.

(3) The legal description of the subject property.

(4) The names and addresses of all adjacent property owners.

(5) The zoning district classification and present use of the subject property.

(6) One (1) or more maps at a scale of not less than one (1) inch to two hundred (200) feet delineating the existing physical characteristics of the site, including:

a. Topography at contours not more than five (5) feet;

b. Slopes of fifteen (15) percent or more;

c. Property boundary lines and dimensions, available utilities and dimensions, roadways, rail lines and public rights-of-way crossing and adjacent to the subject property;

d. Watercourse, drainage ways, sinkholes, groundwater recharge areas, ponds, lakes and bodies of water;

e. A generalized description of vegetation and tree cover;

f. Marshes and floodplains, including the delineation of the 100-year floodplain, where applicable;

g. Drainage patterns;

h. Other physical features that may affect the development of the property.

(7) A map depicting both the existing development of the subject property and appropriate adjacent property which shows the approximate location of existing streets, property lines, easements, water mains, and storm and sanitary sewers.

(8) A written statement, with supporting graphics, generally describing: the overall concept of the proposed planned development, the market which it is intended to serve; the uses included and any limitations upon uses; a description of the general architectural design or theme to be employed; building types and prototypical site layouts, if appropriate; any proposed agreement, dedications or easements; any proposed private covenants and restrictions; and any other information pertinent to the proposal.

(9) One (1) or more maps at a scale of not less than one (1) inch to two hundred (200) feet and a written description of the proposed planned development describing the following features of the project:

a. A general land use plan with a description of the type, location, and nature of land use within each area of the development;

b. A proposed traffic circulation concept which illustrates both external and internal trafficways related to the development, including proposed rights-of-way, travel lanes and other transportation improvements;

c. A generalized layout and description of water service, sanitary sewerage, utilities, refuse collection, management of stormwater runoff and similar essential services;

d. A generalized landscape plan for the development, including the buffer and perimeter areas;

e. A delineation and description of the minimum open space area, including the buffer and perimeter areas;

f. A description of screening and berming adjacent to existing residential areas; and

g. A sign plan that coordinates the size, location, and illumination of proposed signage within the development.

(10) A tabulation of the following information:

a. The approximate total number of dwelling units proposed, by type of structure and approximate number of bedrooms for multifamily units;

b. The approximate total square feet of building floor area proposed for each general type of nonresidential uses;

c. The total land area, expressed in acres and as a percent of the total development area, proposed to be devoted to residential and nonresidential uses including types of structures, streets, public and private open space, and off-street parking and loading areas; and

d. The proposed number of off-street parking and loading spaces for each proposed type of land use.

(11) Construction in phases: If the planned development is proposed for construction in phases, a proposed and tentative schedule for the development of such phases shall be submitted, stating the approximate beginning and completion date for each phase, the proportion of the total public and private open space, and the proportion of each type of proposed land use to be provided or constructed during each such phase; and the overall chronology of development to be followed from phase to phase. All public improvements directly related to each phase shall be completed at the time the phase is developed. Improvements serving the proposed planned development as a whole and any adjoining area in the planned development shall be completed in a sequence assuring full utility of the planned development as a whole and all areas within

the planned development. All public improvements shall also be completed so that future public improvements required by any applicable ordinances of the city are not compromised or rendered unduly difficult.

(12) Traffic impact analysis: A traffic impact analysis indicating the relationship of the proposed development to traffic, road use, and development plans in the immediately surrounding areas.

(h) *Public notice and hearing before the planning and zoning commission.* A public hearing on the preliminary development plan shall be set and conducted by the planning and zoning commission within forty (40) days of the filing of a complete application for approval of a preliminary development plan. At least fifteen (15) days' notice of the time and place of a public hearing before the planning and zoning commission shall be published in a newspaper of general circulation in the city. Additionally, a notice of the public hearing shall be posted on the subject property and letters to all adjacent property owners shall be mailed at least seven (7) days prior to the public hearing. The applicant shall pay the actual costs of all such notifications.

(i) *Action by the planning and zoning commission.* Within forty (40) days following the conclusion of the public hearing, unless a delay is requested by the applicant, the planning and zoning commission shall transmit to the city council its recommendation that the preliminary development plan either be approved, be approved subject to modifications, or not be approved. In considering the preliminary development plan and formulating its recommendation, the planning and zoning commission shall be guided by the standards set forth in this section. The failure of the planning and zoning commission to act within forty (40) days following the conclusion of such hearing, or such longer period as may be agreed to by the applicant, shall be deemed a recommendation for the denial of the preliminary development plan as submitted.

(j) *Public notice and hearing before the city council.* A public hearing on the preliminary development plan shall be set and conducted by the city council within thirty (30) days of action or failure to act by the planning and zoning commission in accordance with the provisions of this section. At least fifteen (15) days' notice of the time and place of a public hearing before the city council shall be published in a newspaper of general circulation in the city. Additionally, a notice of the public hearing shall be posted on the subject property and letters to all adjacent property owners shall be mailed at least seven (7) days prior to the public hearing. The applicant shall pay the actual costs of all such notifications.

(k) *Action by the city council.* Within thirty (30) days following the conclusion of the public hearing, unless a delay is requested by the applicant, the city council shall either refuse to approve the preliminary development plan; shall refer it back to the planning and zoning commission for further consideration of specified matters; or shall, by ordinance duly adopted, approve the preliminary development plan, with or without modifications to be accepted by the applicant as a condition of such approval; provided, however, that if such plan is approved with modifications, no application for approval of a final development plan shall be filed or considered until the applicant has filed with the director of development services his written consent to such modifications. In the event the city council shall fail to act within the time limit herein specified, the preliminary development plan shall be deemed finally denied.

(l) *Effect of preliminary development plan approval.* Unless the applicant shall fail to meet time schedules for filing a final development plan or plans, or shall fail to proceed with development in accordance with the plans as approved, or shall in any other manner fail to comply with any condition of this section or any approval granted pursuant to it, a preliminary development plan which has been approved, or approved with modifications which have been accepted by the applicant, shall not be modified, revoked or otherwise impaired, pending the application for approval of a final development plan or plans, by any action of the city without the consent of the applicant.

(m) *Land uses.* Billboards and telecommunication towers may be approved in planned developments that contain commercial uses consistent with the permitted uses in the C-2, M-1 or M-2 districts. Any

proposed billboard or telecommunication tower must be located within the commercial portion of the planned development with a minimum distance of 100 feet from any residential use within the planned development or residential use or district adjacent to the planned development. Additionally, any billboard proposed in a planned development must meet the standards contained in section 25-401. Any telecommunication tower proposed in a planned development must meet the standards contained in section 30-404

(n) *Density.*

(1) For nonresidential development, the intensity of development may be regulated:

a. By specifying a floor area ratio (FAR) or ratios;

b. By specifying maximum square footage or gross leasable area;

c. By specifying setbacks, height and bulk restrictions; or

d. By a combination of the restrictions set out in subparagraph a., b. or c., hereinabove, for the project as a whole or for components or subareas within the project. In addition, nonresidential preliminary development plans may specify performance standards to be imposed on the project and restrictions regarding the location and nature of industrial, commercial, and other nonresidential activities. In making its determination regarding the intensity of development and appropriate performance standards, the city council may consider the character and scale of similar development, the character and scale of surrounding development and the area in general, and the real or anticipated impact on public facilities and services.

(2) The permitted number of dwelling units may be distributed in any manner over the residential portion of the project consistent with the intent and provisions of this section. The preliminary development plan shall specify distribution of residential density for the project as a whole or for subareas within the project. In making its determination regarding the distribution of residential densities, the city council may consider the compatibility of residential densities with other uses within the district as well as outside the district and the impact of residential densities on public facilities and services.

(o) *Bulk, area and height requirements.* The preliminary development plan shall specify bulk, area, and height restrictions for the project as a whole, for subareas, and for components of the project. In making its determination regarding such restrictions, the council may consider the character and scale of the proposed development as it relates to other uses and structures both within the district and outside the district, and the general character and scale of similar development within the area of the proposal.

(p) *Open space.* Common open space shall comprise at least twenty (20) percent of the gross area of the total development. Common open space shall be used for recreational, park or environmental amenity purposes for the collective enjoyment of the occupants of the development. Of the required common open space, up to one-half (½) of it may be covered by water, floodplain, stormwater detention/retention facilities, or left in a natural state which does not violate the nuisance provisions of the city code. To the extent practicable, common open spaces shall be distributed equitably throughout the development in relation to the dwelling units which such common open space is intended to serve. The open space shall not be relegated to only isolated areas of unusable land, but shall be highly accessible, either physically or visually, to the majority of the residents of the development. Common open space shall be maintained by a property owners association or may be conveyed to a public entity which will agree to maintain the common open space and facilities, subject to city council approval.

(q) *Perimeter buffer requirements.* Where a PD district is adjacent to an existing residential area or an area zoned for residential uses, there shall be a minimum thirty-foot wide bufferyard, which shall be

free of structures or parking areas and shall be landscaped with trees and shrubs, or preserved with natural features so that the PD district is visually obscured from the abutting residential properties. All landscaping shall be maintained in a healthy, neat and weed-free growing condition.

(r) *Public facilities.* The preliminary development plan shall specify conditions, restrictions and standards relating to the timely provision of necessary public facilities. In making its determination regarding such conditions, restrictions and standards, the city council may consider the adequacy of existing facilities, the timely provision of adequate facilities, the impact of the proposed development on existing and planned facilities, and the overall cost to the community.

(s) *Access to public thoroughfares.* The preliminary development plan shall specify the location and general design of ingress and egress to the project along with any proposed access restrictions. The city council may impose such access standards and restrictions as are necessary to protect the integrity and function of the city's thoroughfare system and to ensure the safe and efficient circulation of vehicles and pedestrians within the PD district. In making its determination regarding such access standards and restrictions, the city council may consider the classification and function of the thoroughfare system, existing and projected volumes, the condition and design of the affected thoroughfares, the effect of the proposed development on traffic flow and circulation patterns, and the consistency with other adopted plans and policies.

(t) *Final development plan; purpose.* The final development plan is intended to provide more detail, and to refine and implement the preliminary development plan. A final development plan may be submitted for the entire planned development or in phases as approved in the preliminary development plan. When approving the preliminary development plan, the city council may permit review and approval of the final development plan in its entirety or for specified portions of the project by the planning and zoning commission.

(1) *Application.* Upon approval of the preliminary development plan, the applicant shall submit an application for final development plan approval to the director of development services. The application for final development plan may include the entire area included in the approved preliminary development plan or one (1) or more stages or phases thereof in accordance with a staging plan approved as part of the preliminary development plan. The application shall contain a plan which refines, implements and is in substantial conformity with the approved preliminary development plan, and shall contain such information and documentation as shall be prescribed from time to time by the planning and zoning commission, but it shall in all instances contain at least the following information and documentation, which information and documentation, taken together, shall constitute a final development plan:

a. The applicant's name and contact information.

b. A legal description of the property for which final development plan approval is sought.

c. The date on which preliminary development plan approval was granted.

d. A preliminary plat of subdivision that includes a survey certified by a registered land surveyor.

e. A tabulation of the following information with respect to the area included in the final development plan:

1. The total number of dwelling units proposed, by type of structure and number of bedrooms for multifamily units;

2. The total square feet of building floor area proposed for each general type of nonresidential use;

3. The total land area, expressed in acres and as a percent of the total development area, proposed to be devoted to residential uses and nonresidential uses, including

types of structures; public and private open space; streets, and off-street parking and loading areas; and

f. The proposed number of off-street parking and loading spaces for each proposed type of land use.

g. A landscape plan specifying the design, description and arrangement of landscaping for all open space, buffer and perimeter areas in the PD district, including materials and techniques to be used; and a statement and plan of the proposed treatment of the buffer and perimeter areas of the proposed planned development, including materials and techniques to be used.

h. When the proposed planned development, or stage thereof, includes provisions for public or private open space or service facilities, a statement describing the provision that is to be made for the dedication or care and maintenance of such open space or service facilities. If it is proposed that such open space be owned or maintained by any entity other than a governmental authority, copies of the proposed articles of incorporation and by-laws, or other establishing and governing documents, of such entity shall be submitted.

i. Copies of any restrictive covenants that are to be recorded with respect to property included in the final development plan.

j. Utility plans, indicating placement and sizes of all public utilities, as appropriate.

k. A statement summarizing all changes which have been made in any document, plan, data or information previously submitted, together with revised copies of any such document, plan or data.

l. Proof of recording any easements and restrictive covenants prior to the sale of any land or structure or portion thereof within the planned development, and proof of the establishment and activation of any entity that is to be responsible for the management and maintenance of any public or private common open space or service facility.

m. Such other and further information as the planning and zoning commission and city council shall find necessary for full consideration of the entire proposed planned development or any stage or unit thereof.

(2) *Substantial conformity defined.* A final development plan shall be deemed not to be in substantial conformity with an approved preliminary development plan if it:

a. Increases by more than five (5) percent from the maximum density approved in the preliminary development plan.

b. Increases by more than five (5) percent the maximum floor area to be devoted to any nonresidential use.

c. Increases the height of buildings by more than five (5) percent.

d. Decreases by more than five (5) percent the area approved for public and private open space, or changes the general location of such areas.

e. Relocates approved circulation patterns to any extent that would decrease the ability of such patterns to function efficiently, adversely affect their relation to surrounding lands and circulation patterns, or would reduce their effectiveness as buffers or amenities.

f. Significantly alters the arrangement of land uses within the planned development.

g. Violates any provision of the codes and ordinances applicable to the proposed planned development, or

h. Departs from the preliminary development plan in any other manner which the planning and zoning commission or city council shall, based on stated findings and conclusions, find to materially alter the plan or concept for the proposed planned development.

(3) *Action by planning and zoning commission.* Within forty (40) days following the submission of a complete application for the final development plan, or such longer period as may be agreed to by the applicant, the planning and zoning commission shall review the plan with respect to its conformity to the approved preliminary development plan; with respect to the merit or lack of merit of any departure of the final development plan from substantial conformity with the preliminary development plan; and with respect to compliance of the final development plan with any conditions imposed by approval of the preliminary development plan, and with the provisions of this section and all other applicable federal, state and city codes, ordinances and regulations.

If the planning and zoning commission finds that there is substantial conformity between such plans, and shall further find the final development plan to be in all other respects complete and in compliance with any conditions imposed by approval of the preliminary development plan, and with the provisions of the section and all other applicable federal, state and city codes, ordinances and regulations, it shall approve the final development plan. Planning and zoning commission action shall constitute final approval of the final development plan.

If the planning and zoning commission shall find that the final development plan lacks substantial conformity to the preliminary development plan but merits approval notwithstanding such lack of conformity, it shall transmit such plan to the city council together with its recommendation that the final development plan be approved.

In any case where the planning and zoning commission finds that the final development plan lacks substantial conformity to the preliminary development plan and does not merit approval, it shall transmit such plan to the city council, together with its recommendation that the final development plan not be approved. The failure of the commission to act within the aforesaid time period shall be deemed a recommendation to the city council to deny the final development plan as submitted.

(4) *Action by city council.* Within forty-five (45) days, or such longer period as may be agreed to by the applicant, following the action of the planning and zoning commission, or its failure to act as provided, the city council shall either refuse to approve the final development plan, shall refer it back to the planning and zoning commission for further consideration of specified matters, or shall, by ordinance duly adopted, approve the final development plan, with or without modifications, to be accepted by the applicant as a condition of such approval. The failure of the city council to act within the aforesaid time period shall be deemed a final denial of the final development plan approval.

(u) *Notice and recording of final development plan.* Within seven (7) days following the final disposition of an application for final development plan approval, the secretary of the planning and zoning commission shall mail notice thereof to the applicant and to all city officials, departments, boards and commissions whose duties might be affected by such disposition. When a final development plan is approved, the secretary shall, within ten (10) days of its approval, file a copy of the entire final development plan in the permanent records of the planning and zoning commission.

(v) *Building and other permits.* Upon, but not before, receiving notice from the secretary of the planning and zoning commission that the final development plan has been approved, and upon application by the applicant, all appropriate officials of the city may issue building and other permits to the applicant for development, construction and other work in the area encompassed by the approved final development plan; provided, however, that no such permit shall be issued unless the appropriate

official is first satisfied that the requirements of any codes or ordinances of the city have been met which are applicable to the permit sought.

(w) *Adjustments to plan during development.* During the construction of a planned development, the director of development services may authorize minor adjustments to the final development plan which are within substantial conformity of the final development plan, as defined in section 30-341(s)(2).

(x) *Amendments to final development plan.* In addition to the minor adjustments authorized in the preceding section, an approved final development plan may be amended, varied or altered in the same manner, and subject to the same limitations, as any other regulation established by this section. In addition, an approved final development plan may be amended or altered pursuant to the procedures established by this section for its original approval.

(y) *Compliance with final development plan.* The construction and operation of a planned development shall be in compliance with the approved final development plan at all times.

(Ord. No. 4109, art. 2, 3-1-10; Ord. No. 4206, art. 27, 3-7-11)

## Sec. 30-342. A-1, airport district.

(a) *Purpose.* The purpose of this district is intended to regulate development of land surrounding the Cape Girardeau Regional Airport. To promote compatible land uses with the airport and associated uses of surrounding land, along with protecting the airport from incompatible development.

(b) *Permitted uses.*

(1) Public airport owned and/or operated by a general or special purpose unit of government, to include all air-side support facilities necessary for operation.

(2) General commercial aviation, air charter service, aircraft maintenance, pilot training, and scheduled air passenger and freight services.

(3) Automobile and aircraft parking and storage.

(4) Aircraft and aircraft parts repair, reconstruction, construction or maintenance.

(5) Offices and office buildings.

(6) Warehousing.

(c) *Permitted uses (accessory).*

(1) Motor fuel filling, dispensing and storage for vehicles and aircraft.

(2) Agricultural use, limited to row crop production and excluding the raising of trees or animals, subject to applicable F.A.A. regulations.

(3) Public parks, playgrounds and recreational facilities.

(4) Hotels.

(5) Food service, including restaurants and food dispensing.

(6) Advertising signs, limited to on-premises signs advertising the name and services of a business located in this district.

(7) Billboards, but only in conformance with section 30-502 of this chapter.

(8) Any sign erected and maintained pursuant to and in the discharge of a governmental function or required by law, ordinance or governmental regulation. In addition, any sign referred to in

subsections (6), (7), and (8) herein must also comply with the rules and regulations of the Cape Girardeau Regional Airport, any applicable state or federal law, and receive prior written approval from the airport manager.

(d) *Special uses.*

(1) General retail sales.

(2) Any use permitted in the (M-1) light industrial and (M-2) heavy industrial districts.

(3) Public utilities, except for buildings and accessory structures that are normal and customary in a zoning district which would allow other buildings of the same nature as a use-by-right.

(e) *Height, area, bulk and setback requirements.*

(1) *Maximum Height:* Two (2) stories not to exceed thirty (30) feet.

(2) *Minimum Lot Area:* None.

(3) *Minimum Lot Width:* None.

(4) *Minimum Yard Requirements:*

a. *Front, Rear and Side Yard:* Twenty-five (25) feet for front and rear, ten (10) feet for side yard. Front, rear and side yard requirements do not apply to structures constructed on or immediately adjacent to any runway or aircraft apron at the Cape Girardeau Regional Airport.

(5) *Maximum Building Coverage:* None.

(f) *Open space, landscaping and bufferyard requirements.*

(1) Open space: None.

(2) Landscaping shall be provided as required in chapter 25 of the City Code.

(3) A twenty-foot wide bufferyard shall be required adjacent to any property in the AG, AG-1, RE, R-1, R-2, R-3, R-4, R-5, RUMD and RMH zoning districts. This bufferyard shall comply with the requirements of chapter 25 of the City Code.

(g) *Height regulations; definitions.* As used in this section, the words and phrases set out below shall have the following meanings, unless the context requires otherwise:

(1) *Airport:* Cape Girardeau Regional Airport.

(2) *Airport elevation:* The highest point of an airport's usable landing area measured in feet from sea level.

(3) *Approach surface:* A surface longitudinally centered on the extended runway centerline, extending outward and upward from the end of the primary surface and at the same slope as the approach zone height limitation slope set forth in section 30-342(i). In the airspace plan, the perimeter of the approach surface coincides with the perimeter of the approach zone.

(4) *Approach, transitional, horizontal, and conical zones:* These zones are set forth in section 30-342(h).

(5) *Conical surface:* A surface extending outward and upward from the periphery of the horizontal surface at a slope of twenty to one (20:1) for a horizontal distance of four thousand (4,000) feet.

(6) *Hazard to air navigation:* An obstruction determined to have a substantial adverse effect on the safe and efficient utilization of the navigable airspace.

(7) *Height:* For the purpose of determining the height limits in all zones set forth in this section and shown on the airspace plan, the datum shall be mean sea level elevation unless otherwise specified.

(8) *Horizontal surface:* A horizontal plane one hundred fifty (150) feet above the established airport elevation, the perimeter of which in the airspace plan coincides with the perimeter of the horizontal zone.

(9) *Nonconforming use:* Any preexisting structure, object of natural growth, or use of land which is inconsistent with the provisions of this section, or any amendment thereto.

(10) *Nonprecision instrument runway:* A runway having an existing instrument approach procedure utilizing air navigation facilities with only horizontal guidance, or area type navigation equipment, for which a straight-in nonprecision instrument approach procedure has been approved or planned.

(11) *Obstruction:* Any structure, growth or other object, including a mobile object, which exceeds a limiting height set forth in section 30-342(i).

(12) *Person:* An individual, firm, partnership, corporation, company, association, joint stock association or governmental entity; includes a trustee, a receiver, an assignee or similar representative of any of them.

(13) *Precision instrument runway:* A runway having an existing instrument approach procedure utilizing an instrument landing system (ILS) or precision approach radar (PAR). It also means a runway for which a precision approach system is planned and is so indicated on an approved airport layout plan or any other planning document.

(14) *Primary surface:* A surface longitudinally centered on a runway. When the runway has a specially prepared hard surface, the primary surface extends two hundred (200) feet beyond each end of that runway. The width of the primary surface is set forth in section 30-342(h). The elevation of any point on the primary surface is the same as the elevation of the nearest point on the runway centerline.

(15) *Runway:* A defined area of an airport prepared for landing and take-off of aircraft along its length.

(16) *Structure:* An object, including a mobile object, constructed or installed by man, including, but without limitation, buildings, towers, cranes, smokestacks, earth formation and overhead transmission lines.

(17) *Transitional surfaces:* These surfaces extend outward at ninety-degree angles to the runway centerline and the runway centerline extended at a slope of seven (7) feet horizontally for each foot vertically from the sides of the primary and approach surfaces to where they intersect the horizontal and conical surfaces; also, transitional surfaces for those portions of the precision approach surfaces, which project through and beyond the limits of the conical surface, extended a distance of five thousand (5,000) feet measured horizontally from the edge of the approach surface and at ninety-degree angles to the extended runway centerline.

(18) *Tree:* Any object of natural growth.

(19) *Utility runway:* A runway that is constructed for and intended to be used by propeller driven aircraft of twelve thousand five hundred (12,500) pounds maximum gross weight or less.

(20) *Visual runway:* A runway intended solely for the operation of aircraft using visual approach procedures.

(h) *Airport zones.* In order to carry out the provisions of this section, there are hereby created and established certain zones which include all the land lying beneath the approach surfaces, transitional

surfaces, horizontal surfaces, and conical surfaces as they apply to the Cape Girardeau Regional Airport. Such zones are shown in the most recent approved airport layout plan which is incorporated into this article and made a part hereof as though fully set out herein.

An area located in no more than one (1) of the following zones is considered to be only in the zone with the more restrictive height limitation. The various zones are hereby established and defined as follows:

(1) *Runway 20 visual approach zone.* The inner edge of this approach zone coincides with the width of the primary surface and is five hundred (500) feet wide. The approach zone expands outward uniformly to a width of one thousand two hundred fifty (1,250) feet at a horizontal distance of five thousand (5,000) feet from the primary surface. Its centerline is the continuation of the centerline of the runway.

(2) *Runway 02 nonprecision instrument approach zone.* The inner edge of this approach zone coincides with the width of the primary surface and is five hundred (500) feet wide. The approach zone expands outward uniformly to a width of two thousand (2,000) feet at a horizontal distance of five thousand (5,000) feet from the primary surface. Its centerline is the continuation of the centerline of the runway.

(3) *Precision instrument runway 10 approach zone.* The inner edge of this approach zone coincides with the width of the primary surface and is one thousand (1,000) feet wide. The approach zone expands outward uniformly to a width of sixteen thousand (16,000) feet at a horizontal distance of fifty thousand (50,000) feet from the primary surface. Its centerline is the continuation of the centerline of the runway.

(4) *Runway 28 nonprecision instrument approach zone.* The inner edge of this approach zone coincides with the width of the primary surface and is one thousand (1,000) feet wide. The approach zone expands outward uniformly to a width of four thousand (4,000) feet at a horizontal distance of ten thousand (10,000) feet from the primary surface. Its centerline is the continuation of the centerline of the runway.

(5) *Transitional zones.* The transitional zones are the areas beneath the transitional surfaces.

(6) *Horizontal zone.* The horizontal zone is established by swinging arcs of five thousand (5,000) feet radii for all runways designated as utility or visual, and ten thousand (10,000) feet radii for all others measured from the center of each end of the primary surface of each runway, and connecting the adjacent arcs by drawing a line tangent to these arcs. The horizontal zone does not include the approach and transitional zones.

(7) *Conical zone.* The conical zone is established as the area that commences at the periphery of the horizontal zone and extends outward therefrom a horizontal distance of four thousand (4,000) feet.

(i) *Airport zone height limitations.* Except as otherwise provided in this section, no structure shall be erected, altered or maintained, and no tree shall be allowed to grow in any zone created by this article to a height in excess of the applicable height limit herein established for such zone. Such applicable height limits are hereby established for each of the zones in question as follows:

(1) *Runway 20 visual approach zone.* Slopes twenty (20) feet outward for each foot upward beginning at the end of and at the same elevation as the primary surface and extending to a horizontal distance of five thousand (5,000) feet along the extended runway centerline.

(2) *Runway 02 nonprecision instrument approach zone.* Slopes twenty (20) feet outward for each foot upward beginning at the end of and at the same elevation as the primary surface and extending to a horizontal distance of five thousand (5,000) feet along the extended runway centerline.

(3) *Precision instrument runway 10 approach zone.* Slopes fifty (50) feet outward for each foot upward beginning at the end of and at the same elevation as the primary surface and extending to a horizontal distance of ten thousand (10,000) feet along the extended runway centerline; thence slopes upward forty (40) feet horizontally for each foot vertically to an additional horizontal distance of forty thousand (40,000) feet along the extended runway centerline.

(4) *Runway 28 nonprecision instrument approach zone.* Slopes thirty-four (34) feet outward for each foot upward beginning at the end of and at the same elevation as the primary surface and extending to a horizontal distance of ten thousand (10,000) feet along the extended runway centerline.

(5) *Traditional zones.* Slopes seven (7) feet outward for each foot upward beginning at the sides of and at the same elevation as the primary surface and the approach surface, and extending to a height of one hundred fifty (150) feet above the airport elevation which is three hundred forty-two (342) feet above mean sea level. In addition to the foregoing, there are established height limits sloping seven (7) feet outward for each foot upward beginning at the sides of and at the same elevation as the approach surface, and extending to where they intersect the conical surface. Where the precision instrument runway approach zone projects beyond the conical zone, there are established height limits sloping seven (7) feet outward for each foot upward beginning at the sides of and at the same elevation as the approach surface, and extending a horizontal distance of five thousand (5,000) feet measured at ninety-degree angles to the extended runway centerline.

(6) *Horizontal zone.* Established at one hundred fifty (150) feet above the airport elevation or at a height of four hundred ninety-two (492) feet above mean sea level.

[(7) *Reserved.*]

(8) *Conical zone.* Slopes twenty (20) feet outward for each foot upward beginning at the periphery of the horizontal zone and at one hundred fifty (150) feet above the airport elevation and extending to a height of three hundred fifty (350) feet above the airport elevation.

[(9) *Reserved.*]

(10) *Excepted height limitations.* Nothing in this article shall be construed as prohibiting the construction or maintenance of any structure to a height of thirty (30) feet, or growth of any tree to a height of fifty (50) feet, above the surface of the land.

(j) *Use restrictions.* Notwithstanding any other provision of this article, no use may be made of land or water within any zone established by this article in such a manner as to create electrical interference with navigation signals or radio communication between the airport and aircraft, make it difficult for pilots to distinguish between airport lights and others, result in glare in the eyes of pilots using the airport, impair visibility in the vicinity of the airport, create bird strike hazards, or otherwise in any way endanger or interfere with the landing, takeoff or maneuvering of the aircraft intending to use the airport.

(k) *Nonconforming uses.*

(1) *Regulations not retroactive.* The regulations prescribed by this article shall not be construed to require the removal, lowering or other change or alteration of any structure or tree not conforming to the regulations as of the effective date of the ordinance from which this article derives, or otherwise interfere with the continuance of such nonconforming use. Nothing contained herein shall require any change in the construction, alteration, or intended use of any structure, the construction or alteration of which was begun prior to the effective date of the ordinance from which this article derives.

(2) *Marking and lighting.* Notwithstanding the preceding provision of this section, the owner of any existing nonconforming structure or tree is hereby required to permit the installation, operation

and maintenance thereon of such markers and lights as shall be deemed necessary by the airport manager to indicate to the operators of aircraft in the vicinity of the airport the presence of such airport obstruction. Such markers and lights shall be installed, operated and maintained at the expense of the Cape Girardeau Regional Airport.

(l) *Permits.*

(1) *Future uses.* Except as specifically provided in subsections (a), (b) and (c) hereunder, no material change shall be made in the use of land, no structure shall be erected or otherwise established, and no tree shall be planted in any zone hereby created unless a permit therefor shall have been applied for and granted by the building official. Each application for a permit shall indicate the purpose for which the permit is desired, with sufficient particularity to permit it to be determined whether the resulting use, structure or tree would conform to the regulations herein prescribed. If such determination is in the affirmative, the permit shall be granted. No permit for a use inconsistent with the provisions of this article shall be granted unless a variance has been approved in accordance with section 30-204

a. In the area lying within the limits of the horizontal zone and conical zone, no permit shall be required for any tree or structure less than seventy-five (75) feet of vertical height above the ground, except when because of terrain, land contour, or topographic features, such tree or structure would extend above the height limits prescribed for such zones.

b. In areas lying within the limits of the approach zones, but at a horizontal distance of not less than four thousand two hundred (4,200) feet from each end of the runway, no permit shall be required for any tree or structure less than seventy-five (75) feet of vertical height above the ground, except when such tree or structure would extend above the height limit prescribed for such approach zones.

c. In the areas lying within the limits of the transition zones beyond the perimeter of the horizontal zone, no permit shall be required for any tree or structure less than seventy-five (75) feet of vertical height above the ground, except when such tree or structure, because of terrain, land contour, or topographic features, would extend above the height limit prescribed for such transition zones.

Nothing contained in any of the foregoing exceptions shall be construed as permitting or intending to permit any construction, or alteration of any structure, or growth of any tree in excess of any of the height limits established by this article except as set forth in section 30-342(i)(10).

(2) *Existing uses.* No permit shall be granted that would allow the establishment or creation of an obstruction, or permit a nonconforming use, structure or tree to become a greater hazard to air navigation than it was on the effective date of this article or any amendments thereto, or than it is when the application for the permit is made. Except as indicated, all applications for such a permit shall be granted.

(3) *Nonconforming uses abandoned or destroyed.* Whenever the building official determines that a nonconforming tree or structure has been abandoned or more than eighty (80) percent torn down, physically deteriorated, or decayed, no permit shall be granted that would allow such structure or tree to exceed the applicable height limit or otherwise deviate from the zoning regulations.

(4) *Variances.* Any person desiring to erect or increase the height of any structure, or permit the growth of any tree, or use property, not in accordance with the regulations prescribed in this article, may apply to the board of adjustment for a variance from such regulations. The application for variance shall be accompanied by a determination from the Federal Aviation Administration as to the effect of the proposal on the operation of air navigation facilities and the safe, efficient use of navigable airspace. Such variances shall only be allowed where it is duly

found that a literal application or enforcement of the regulations will result in unnecessary hardship, and that the relief granted will not be contrary to the public interest, and will not create a hazard to air navigation facilities and the safe, efficient use of navigable airspace. In addition, such variances shall only be allowed where it is duly found that the relief granted will do substantial justice, and will be in accordance with the spirit of this article. Additionally, no application for variance to the requirements of this article may be considered by the Board of Adjustment unless a copy of the application has been furnished to the airport manager for advice as to the aeronautical effects of the variance. If the airport manager does not respond to the application within fifteen (15) days after receipt, the board of adjustment may act on its own to grant or deny said application.

(5) *Obstruction marking and lighting.* Any permit or variance granted may, if such action is deemed advisable to effectuate the purposes of this article and be reasonable in the circumstances, be so conditioned as to require the owner of the structure or tree in question to install, operate and maintain, at the owner's expense, such markings and lights as may be necessary. If deemed proper by the board of adjustment, this condition may be modified to require the owner to permit the Cape Girardeau Regional Airport at its own expense, to install, operate and maintain the necessary markings and lights.

(m) *Enforcement.* It shall be the duty of the building official to administer and enforce the regulations prescribed herein. Applications for permits and variances shall be made to the building official upon a form published for that purpose. Applications required by this article to be submitted to the building official shall be promptly considered and granted or denied. Application for action by the board of adjustment shall be forthwith transmitted by the building official.

(n) *Conflicting regulations.* Where there exists a conflict between any of the regulations or limitations prescribed in this article and any other regulations applicable to the same area, whether the conflict be with respect to the height of structures or trees, and the use of land, or any other matter, the more stringent limitation or requirement shall govern and prevail.

(Ord. No. 4109, art. 2, 3-1-10; Ord. No. 4206, arts. 28, 29, 3-7-11)

## Sec. 30-350. Overlay districts.

## Sec. 30-351. NCON, neighborhood conservation overlay district.

(a) *Purpose.* The neighborhood conservation overlay district [NCON] is intended to provide a mechanism to initiate and implement revitalization or conservation of older areas or neighborhoods possessing distinct features, identity or character worthy of retention and enhancement. A neighborhood conservation district (NCON) takes effect through petition of the property owners of an identified neighborhood. This overlay district will provide additional guidelines that will facilitate maintenance and protection of the neighborhood character and the development of vacant land or under-used lots. This overlay district is not intended to take the place of a local historic district, but to provide an additional method for property owners to preserve neighborhoods.

The NCON overlay district is intended to:

(1) Maintain neighborhood character and integrity by focusing special attention on the maintenance of the physical environment in order to stabilize and enhance property values.

(2) Promote the efficient use of urban land, including the encouragement of infill development of vacant and underutilized parcels that is compatible with the area.

(3) Encourage and support the rehabilitation and renovation of existing structures.

(4) Foster the harmonious, orderly and efficient growth, development and redevelopment of the neighborhood in a manner that accommodates desirable change.

(b) *General provisions.*

(1) A neighborhood conservation overlay district may be enacted in conjunction with any underlying zoning district or districts within the city in accordance with the provisions of this section. All regulations of the underlying zoning district shall apply to property within the neighborhood conservation overlay district.

(2) The neighborhood conservation overlay district shall be identified on the official zoning map by the suffix (NCON).

(3) An application for designation as a neighborhood conservation overlay district may be initiated by:

a. A petition duly signed and acknowledged by the owners of fifty-one (51) percent or more of the areas of land within the boundaries of the proposed overlay district, provided that it includes at least fifty-one (51) percent of the owners of record of the subject properties; and

b. A statement documenting the conditions justifying neighborhood conservation designation and setting forth the purposes of such a designation; and

c. The general design guidelines that are proposed to govern the development or redevelopment of properties within the overlay district.

(4) The designation ordinance shall identify the overlay district boundaries, which shall be compact, contiguous, uniform, and shall follow streets and alleys, rivers and creeks, railroads, property lines and city boundary lines. The designation ordinance shall include regulations and guidelines which apply to new construction as well as to additions, alterations, rehabilitation, conservation and renovation of existing structures.

(c) *Designation criteria.* When determining a district's potential for neighborhood conservation designation, the planning and zoning commission and city council shall ensure that one (1) or more of the following criteria are satisfied:

(1) The area contains similar land uses and densities, displays unifying elements and possesses cohesive physical, social or economic relationships;

(2) There is evidence of structural deterioration, encroachment of incompatible land uses, or erection of incompatible structures which are contributing to the changing of the area;

(3) The area exhibits revitalization potential, but coordinated action or treatment is needed;

(4) There is evidence that neighborhood conservation designation would be appropriate and effective method for conserving and revitalizing the area;

(5) District property owners or residents desire and support neighborhood conservation efforts; or

(6) District designation conforms to city plans and policies.

(d) *Procedure for review and approval of development plans.*

(1) Prior to undertaking any work regulated by the adopted design guidelines and the issuance of any building permit or other permit for such work in a neighborhood conservation overlay district, the owner shall submit a site development plan for review and approval by the director of development services. Four (4) copies of the plan shall be submitted, which unless otherwise required by the director, shall include the following:

a. The legal description of the property to be developed;

b. The boundaries and dimensions of the lot or property to be developed;

c. The location of all building setback lines along adjacent streets and lots;

d. The location and designation of all easements on the lot or property to be developed;

e. The location of all existing structures on, and adjacent to, the lot or property to be developed;

f. The location and dimensions of all existing and proposed driveways, parking areas, walls, fences, retaining walls, walkways, landscaping, screening, lighting, signage, and service and mechanical areas on the lot to be developed;

g. The location and dimension of all new structures and additions including entrance doors, windows, porches, balconies, carports and garages;

h. A building elevation drawing or photograph, and a list, description and samples of materials to be used; and

i. Any other information deemed necessary to show compliance with this section and with regulations and standards of the applicable neighborhood conservation overlay district designation.

(2) Depending upon the nature of the proposed project, additional information may be required to be included on the site development plan.

(3) Upon receiving the site development plan, the director shall notify any officially recognized neighborhood association within said district in writing.

(4) The director shall review the site development plan for compliance with section 30-351(d)(1), and the regulations and standards of the designation ordinance within two (2) weeks of receipt. A decision to disapprove the development plan shall be made in writing and shall state the specific reasons for disapproval. If the director disapproves the development plan, the owner may revise the plan to reflect the director's comments, or may, within ten (10) days file an appeal with the city council in accordance with this chapter.

(5) Minimum size of an area to be considered for district designation is ten (10) contiguous parcels, unless otherwise determined to be a cohesive neighborhood by the director of developmental services.

(e) *General design guidelines.* The general guidelines set out below shall be the minimum considerations for a neighborhood conservation overlay district. Any individual neighborhood conservation overlay district proposed may set out additional design guidelines specific to the identified neighborhood. These guidelines apply to new construction, additions, alterations, rehabilitations and renovation of existing structures to preserve the character of the identified neighborhood. The intent is to preserve the character of the district, while not imposing over-reaching restrictions. All work should be compatible with character of the neighborhood district including the following:

(1) *Site Elements:*

a. Building orientation and separation.

b. Area, bulk and density restrictions including floor area, lot size and width, building sets backs, lot coverage, height limits and other related provisions.

c. Walls, fences, retaining walls and walkways.

d. Landscaping and screening.

e. Lighting and signage.

f. Size and placement of accessory structures, including carport and garages.

(2) *Building Elements:*

a. Architectural detail and scale.

b. Height, number of stories and vertical and horizontal alignments.

c. Roof type, pitch and materials.

d. Exterior wall materials, texture and color.

e. Foundations height and materials.

f. Window and door type, proportion and arrangement.

g. Porches, decks and awnings.

(Ord. No. 4109, art. 2, 3-1-10)

## Sec. 30-352. H, historic overlay district.

(a) *Purpose.* The purpose of this district is to identify and provide an avenue to designate local historic landmarks, and local historic districts. It is intended to help protect, preserve and enhance places, districts, sites, buildings and other features having a special historical, architectural, cultural or aesthetic value. The historic overlay (H) district is further intended to:

(1) Stimulate revitalization and preservation of the residential, civic and business areas;

(2) Promote economic progress through heritage tourism;

(3) Provide for and encourage the designation, protection, preservation, rehabilitation and restoration of historic districts and properties;

(4) Facilitate the city's efforts to participate in federal or state historic preservation programs;

(5) Protect, enhance and perpetuate such buildings, structures or land improvements and landmarks which represent or reflect elements of the city's cultural, social, economic, political and architectural history;

(6) Safeguard the city's historic, aesthetic and cultural heritage as reflected in such buildings, sites, structures or land improvements and landmarks;

(7) Provide a mechanism to identify and preserve the distinctive archaeological, historical and architectural characteristics of the city which represent elements of the city's cultural, social, economic, political and architectural history;

(8) Foster civic pride in the beauty and noble accomplishments of the past, as represented in the city landmarks and historic districts;

(9) Conserve and improve the value of property or areas designated as landmarks or within historic districts;

(10) Protect and enhance the attractiveness of the city to home buyers, tourists, visitors and shoppers; and thereby supporting and promoting business, commerce, industry and providing economic benefit to the city;

(11) Foster and encourage preservation, restoration and rehabilitation of structures, areas, and neighborhoods;

(12) Provide economic development by preserving and enhancing the environmental quality and property values of neighborhoods and the community at large;

(13) Promote the use of historic landmarks for the education, pleasure, and welfare of the people; and

(14) Provide economic benefits to encourage business and residential owners to locate and invest in historically significant structures.

The (H) district is an overlay zoning classification that establishes additional restrictions and standards on those uses permitted by the underlying zoning district. In the event of conflict between the overlay zoning district regulations and the regulations of the underlying zoning district, the overlay zoning regulations govern. In all other cases, both the overlay zoning and underlying zoning regulations apply.

(b) *Nomination of local landmark or historic district.*

(1) *General.* A nomination for designation as a historic district shall be submitted to the historic preservation commission and may be initiated by a petition duly signed and acknowledged by the owners of fifty-one (51) percent or more of the areas of land within the boundaries of the proposed overlay district, provided that it includes at least fifty-one (51) percent of the owners of record of the subject properties. A nomination for designation as a landmark may be initiated by a petition duly signed and acknowledged by all of the owners of record of the subject property. A nomination of a landmark or district shall be considered an application to amend the official zoning map of the city and thereby shall be reviewed under the provisions of this chapter. The historic preservation commission shall review the application and make a recommendation to the planning and zoning commission and the city council based upon the nomination criteria.

(2) *Declaration of eligibility.* The historic preservation commission may, through its surveys and research, identify architecturally significant properties, areas, landmarks and structures and notify property owners of their eligibility for nomination as a landmark or district. The commission shall maintain a register of significant undesignated properties, and distribute the register to appropriate agencies and bodies.

(3) *Legal description.* A legal description of the subject property proposed to be designated as a landmark or historic district shall be included with the nomination.

(c) *Criteria for nomination.* Upon receipt of a nomination application, the historic preservation commission shall review the supporting evidence and determine if the property, area, or structure has sufficient integrity of context, design, materials, and workmanship to make it suitable for preservation, restoration, or rehabilitation, and one (1) or more of the following criteria shall be met:

(1) It has character, interest or value as part of the development, heritage, or cultural characteristics of the community, county, state, or country;

(2) It is a site of a significant local, county, state, or national event;

(3) It is identified with a person(s) who contributed significantly to the development of the community, county, state or country;

(4) It embodies distinguishing characteristics of an architectural style valuable for the study of a period, type, method of construction or use of indigenous materials;

(5) It is identified as the work of a master builder, designer, architect or landscape architect, whose individual work has influenced the development of the community, county, state or country;

(6) It embodies elements of design, detailing, materials, or craftsmanship which renders it architecturally significant;

(7) It embodies design elements that make it structurally or architecturally innovative;

(8) It has a location or singular physical characteristics that make it an established or familiar visual feature; or

(9) It has character of a particularly fine or unique example of a utilitarian structure, including, but not limited to, barns, vehicle fueling stations, or other commercial structures, with a high level of integrity or architectural significance.

(d) *Procedure for nomination.*

(1) *Notification of nomination and public hearing.* The historic preservation commission shall schedule and hold a meeting on the nomination as to whether or not a nominated landmark or historic district meets the criteria for designation. The meeting shall be scheduled, held and conducted as a public hearing in the same manner as other hearings to consider applications for zoning map amendments or ordinance amendments and to receive the viewpoints of affected property owners, residents and other interested citizens. Notice of the date, time, place and purpose of the hearing and a copy of the completed nomination form shall be sent by regular mail to the owner(s) of record and to the nominators. Notice of the public hearing shall also be listed on the commission's agenda for the date specified.

(2) *Timely determination.*

a. Within sixty (60) days of the conclusion of the public hearing, the historic preservation commission shall make a recommendation as to whether or not the nominated landmark or historic district meets the criteria for designation in section 30-352(c). Such recommendation may be for approval, disapproval or approval, in part and, together with a report shall contain the following information:

1. Explanation of the significance or lack of significance of the nominated landmark or historic district as it relates to the criteria for designation.

2. Explanation of the integrity or lack of integrity of the nominated landmark or historic district.

3. In the case of a nominated landmark or historic district found to meet the criteria for designation:

(i) The significant exterior architectural features of the nominated landmark that should be protected.

(ii) The types of construction, alteration, demolition and removal, other than those requiring a building or demolition permit that should be reviewed for a certificate of appropriateness.

4. A review of proposed design guidelines for applying the criteria for review of certificates of appropriateness to the nominated landmark or historic district.

5. A map showing the location of the nominated landmark or the boundaries of the nominated historic district.

b. The recommendation and report of the historic preservation commission shall be sent to the city council and planning and zoning commission within seven (7) days following the vote on the resolution, and shall be available to the public at the offices of the division of planning services.

(3) *Action by planning and zoning commission.*

a. Upon receipt of the historic preservation commission's recommendation and report, the planning and zoning commission shall review each proposed landmark or historic district for historic zoning designation. Within thirty (30) days of the planning and zoning commission's review it shall make a recommendation with respect to the proposed "H" designation. The recommendation, together with a record of the proceedings, shall be forwarded to the city council.

b. An "H" historic zoning designation shall be regarded as a supplemental zoning designation and shall not affect in any way the underlying zoning designation, as provided in other articles of this chapter. The existing zoning standards for each district are set forth and shall be complied with unless such standards conflict with the provisions of the ordinance designating such landmark or historic district and in the event of a conflict, provisions of the historic district ordinance shall prevail. A landmark or historic district shall be designated with an "H" affixed to the current zoning district acronym and illustrated as such on the official zoning district map.

(4) *Notification of determination.* Notice of the determination by the historic preservation commission, including a copy of the report, shall be sent to the owners of record of a nominated landmark, and owners of all property within a nominated historic district, and to the nominator within thirty (30) days following a determination of the historic preservation commission as to whether or not the nominated landmark or historic district meets the criteria for designation.

(5) *Action by the city council.*

a. Upon receipt of a recommendation from the planning and zoning commission, the city council shall proceed in the normal manner provided for zoning ordinance and map amendments, as set forth in section 30-206. Said procedure shall include a public hearing with notice as specified in section 30-206. Notice of the hearing shall also be provided in the manner specified in section 30-352(d)(4).

b. After the public hearing, the city clerk shall provide written notification of the action of the city council by regular mail to the nominator, the owner(s) of record of the nominated landmark or to all property owners within a nominated historic district. The notice shall include a copy of the designation ordinance passed by the city council and shall be sent within thirty (30) days of the city council action. A copy of each designating ordinance shall be sent to the historic preservation commission, the city planning and zoning commission, and the division of planning services. If designated, the landmark or historic district shall receive the supplemental classification "H" for historic structure or district, and the designating ordinance shall prescribe the significant architectural, historical or archaeological features that qualify the landmark for designation. A copy of the designating ordinance shall also be recorded with the county recorder of deeds.

(e) *Interim control over nominated properties.* No building permits shall be issued by the city for alteration, construction, demolition, or relocation of a nominated landmark or any property or structure within a nominated historic district from the date of publication of the public hearing by the historic preservation commission at which the nomination is first presented for consideration until the final disposition of the nomination by the city council, unless such alteration, construction, demolition or removal is authorized by resolution of the city council, as necessary for the health, safety or welfare of the public. In no event, however, shall the delay be for more than one hundred eighty (180) days.

(f) *Amendment or rescission of designation.* A designation may only be amended or rescinded by petition to the city council in compliance with the same procedure and according to the same criteria set forth herein for designation.

(g) *Purpose for a certificate of appropriateness.* A certificate of appropriateness is intended to provide for review and approval of any work to be undertaken on structures within the historic overlay zoning district or on designated local landmarks in order to ensure compliance with the city's design guidelines as based on the Secretary of the Interior's standards for historic preservation. This permit is not intended to disrupt or discourage investment in historic properties, but is intended to promote and encourage use of these established standards and guidelines for the rehabilitation, preservation, adaptive reuse, and restoration of historic resources and neighborhoods.

(h) *Certificate of appropriateness; applicability.* All properties within a historic overlay district or any property designated as a local landmark shall be subject to the provisions of this article. No application for a building permit or demolition permit for any action in a historic district shall be approved until the city council, historic preservation commission, or its designee has issued a certificate of appropriateness. A certificate of appropriateness shall be required before one (1) or more of the following actions affecting the exterior architectural appearance of any landmark or property within a historic overlay zoning district may be undertaken:

(1) Any construction, repair, alteration, or removal affecting an exterior architectural feature or features;

(2) Demolition in whole or in part of any structure; or

(3) Any construction, repair, alteration, removal, or demolition, in whole or in part, proposed by the city or any of its agencies or departments affecting a significant exterior architectural feature or features, or an archaeological site.

(i) *Certificate of appropriateness; applications.* Applications for a certificate of appropriateness shall include the following information:

(1) Photographs of the existing conditions;

(2) Scaled drawings of proposed changes;

(3) List of proposed materials with dimensions;

(4) As necessary for review, manufacturer's literatures, material samples, site map and a structural report; and

(5) Any other information deemed necessary to conduct a thorough analysis of the application.

(j) *Certificate of appropriateness; approval criteria.* A certificate of appropriateness shall not be approved unless the applicant presents clear and convincing evidence that the application meets the following criteria, adapted from the Secretary of the Interior's Standards for Rehabilitation. The criteria are to be applied to specific rehabilitation projects in a reasonable manner, taking into consideration economic and technical feasibility.

(1) Every reasonable effort shall be made to provide that a property will be used as it was historically, or be given a new use that requires minimal change to its distinctive materials, features, spaces, and special relationships.

(2) The historic character of a property will be retained and preserved. The removal of distinctive materials or alterations of features, shapes, and relationships that characterize a property will be avoided when possible.

(3) Each property will be recognized as a physical record of its time, place, and use. Changes that create a false sense of historical development, such as adding conjectural features or elements from other historic properties, will be discouraged.

(4) Changes to a property that have acquired historic significance in their own right will be recognized and respected.

(5) Distinctive materials, features, finishes, and construction techniques or examples of craftsmanship that characterize a property will be treated with sensitivity.

(6) Deteriorated historic features will be repaired, rather than replaced whenever possible. Where the severity of deterioration requires replacement of a distinctive feature, the new features should match the old in design, color, texture, and where possible, materials. Replacement of missing features will be substantiated by documentary and physical evidence.

(7) Chemical or physical treatments, if appropriate, will be undertaken using the gentlest means possible. Treatments that cause damage to historic materials will not be used.

(8) Every reasonable effort shall be made to provide that archeological resources will be protected and preserved in place. If these resources must be disturbed, mitigation measures will be undertaken.

(9) Whenever possible, new additions, exterior alterations or related new construction shall be done in such a manner that they will not destroy historic materials, features, and special relationships that characterize the property. Any new work should be differentiated from the old and be compatible with the historic materials, features, size, proportion, and massing to protect the integrity of the property and its environment.

(10) Whenever possible, new additions and adjacent or related new construction will be undertaken in such a manner that, if removed in the future, the essential form and integrity of the historic property and its environment will be unimpaired.

(11) In conducting a review, the historic preservation commission may consider economic hardship and other factors that may affect an owner's ability to undertake and complete rehabilitation or other work under consideration.

(k) *Certificate of appropriateness; review procedure.* All applications for a certificate of appropriateness shall be reviewed and considered within sixty (60) days of the filing of the application. Determinations will be based on the approval criteria set forth in this article and generally accepted preservation policies as determined and set forth by the historic preservation commission.

(1) Applications for a certificate of appropriateness shall be reviewed by the historic preservation commission and formal action shall be taken by majority vote. The historic preservation commission may delegate the review and approval or denial of a certificate of appropriateness application to the city manager or his/her designee where the application is limited to one (1) or more of the following:

a. Exterior changes to a building or structure arising from an emergency situation that requires immediate attention. Examples include repairs due to a storm, tornado, earthquake, flood, fire, act of vandalism, etc., where the interior of the building or structure is exposed to the weather, and there is a change in material, color, texture, finish, or other characteristic.

b. Temporary signs.

Approval of such applications may only be granted if the proposed work is in compliance with the City Code. The historic preservation commission shall be notified of any applications approved or denied.

(2) Written notice of the approval or denial of the application for a certificate of appropriateness shall be provided to the applicant following the determination.

(3) Upon the approval of an application, the planning services office may, if all other applicable requirements are met, issue a certificate. The certificate may specify any conditions of approval under which the work shall be completed to be in compliance with the approved application.

(4) Upon the denial of an application, a statement of the reasons for denial shall accompany the written notice. The historic preservation commission shall make recommendations to the applicant concerning changes, if any, in the proposed action, which would cause the historic preservation commission to reconsider its denial. The applicant may submit an amended or revised application that takes into consideration the recommendations.

(l) *Certificate of appropriateness; demolition.*

(1) Demolition, in whole or in part, of individual landmarks or any primary structure within a historic district is not permitted unless a certificate of appropriateness has been obtained for that purpose. Deterioration caused by neglect or lack of routine maintenance by the existing owner does not provide grounds for the approval of demolition. Grounds for approving a certificate of appropriateness for demolition include, but are not limited to, the following:

a. The structure has been substantially damaged through fire, deterioration, or natural disaster;

b. The structure does not possess the integrity, originality, craftsmanship, and age to merit preservation; and

c. There is substantial evidence that it would not be physically or economically viable to rehabilitate the structure.

(2) For applications for demolition, the city should provide notice of the proposed demolition to surrounding property owners, as outlined in section 30-206(h) of this Code, and post a sign on the affected property indicating the proposed demolition. In cases of demolition, the owner shall permit access to the subject property for the purpose of inspections and/or appraisals required by the historic preservation commission or city staff.

(3) Applications for demolition of a landmark or primary structure shall be reviewed by the historic preservation commission and forwarded to the city council with a recommendation. The city council shall take formal action on the application. approval shall be made by resolution of the city council.

(m) *Certificate of appropriateness; appeal procedure.* An appeal of the denial of a certificate of appropriateness shall be filed with the division of planning services within thirty (30) days of the date of denial. The appeal of a denial by the historic preservation commission shall be reviewed by the planning and zoning commission. The planning and zoning commission must render a decision within sixty (60) days of the filing of the appeal or the appeal shall be deemed to have been denied. It shall require a favorable vote by a majority of the members of the planning and zoning commission present at the meeting to overturn the decision of the historic preservation commission. The appeal of a denial by the city manager or his/her designee shall be reviewed by the historic preservation commission. The decision of the historic preservation commission to uphold or overturn an appeal shall not be further appealed to the planning and zoning commission.

(n) *Certificate of appropriateness; hardship appeal procedure.*

(1) If an appeal of the denial of a certificate of appropriateness is based solely upon hardship, proof of hardship shall be the burden of the property owner.

(2) Reversal of a certificate of appropriateness denial based solely upon hardship shall not be approved unless the applicant presents clear and convincing evidence that may include the following criteria:

a. Any deterioration or damage cited to establish hardship shall not be due to the present owner's willful act, neglect or inattention to maintenance and repairs. Evidence showing that the owner or applicant failed to maintain or protect the property, or performed or permitted any acts to the detriment of the property, may be used as a basis to reject allegations of hardship;

b. For income-producing property, a reasonable rate of return cannot be obtained from the property if it retains its historic features or structures in either its present condition or if its features or structures are rehabilitated; or

c. For non-income-producing property, the property has no beneficial use in its present condition or if rehabilitated.

(o) *Certificate of appropriateness; stop work order.*

(1) The director shall monitor all projects that require a certificate of appropriateness to ensure compliance with the terms and conditions of a certificate of appropriateness, building permit or demolition permit. Where a project fails to comply with any part of a certificate of appropriateness or the provisions of this article, it shall be considered a violation of this Code, and the director may issue a stop work order in writing which states the violation and a deadline by which to rectify the violation. If the project fails to meet this deadline for compliance, a second stop work order may be issued in writing and delivered by certified mail, which shall set forth the terms of compliance and the penalties for violation of this article.

(2) Whenever the director has reason to believe that an action for which a certificate of appropriateness would be required has been initiated or is about to be initiated, he shall make every reasonable effort to contact the owners, occupants, contractor, or subcontractor and inform them of the application process. If a stop work order is determined to be necessary to halt an action that requires a certificate of appropriateness, a copy of the stop work order shall be delivered to the owners, occupants, contractors, or subcontractors. A copy of the application form shall also be included with the stop work order.

(p) *Certificate of appropriateness; lapse in work.* Approval of any certificate of appropriateness shall be effective for a period of one hundred eighty (180) days, at the end of which time a building permit, if required, shall have been issued for the action(s) so authorized. In the event that a required building permit has not been issued within one hundred eighty (180) days or at such time work is suspended or abandoned for a period exceeding one hundred eighty (180) days, the certificate of appropriateness shall be null and void, and the applicant shall be required to submit a new certificate of appropriateness application.

(q) *Fees and penalties.* The city council shall establish an appropriate system for processing fees for the review of nominations and certificates of appropriateness.

(1) It shall be unlawful for any person or entity to undertake or cause an alteration, construction, demolition or removal of any nominated or designated landmark or property within a nominated or designated historic district without a certificate of appropriateness. Any person or entity convicted of violating the provisions of this section shall be subject to the penalties set forth in section 30-205

(2) It shall be unlawful not to maintain designated property or landmarks, or property within a designated historic district within the minimum maintenance requirements of section 30-352(t).

(r) *District H, design guidelines.* In addition to the criteria for approval of a certificate of appropriateness as set forth in this article, the following design guidelines may be used, in conjunction with design guidelines and policies adopted by the historic preservation commission in considering an application for a certificate of appropriateness and can serve as the basis for conditions of approval. These guidelines are based on accepted practices for historic preservation and are not intended to inhibit change, new construction, new architectural styles, or new technologies when these changes complement the existing buildings and streetscapes. Design review decisions shall be based on the same set of design guidelines for all properties designated by the district H, however, structures possessing a greater degree of integrity, originality, craftsmanship and historic significance may have the guidelines more stringently applied than those with lesser significance as determined by the historic preservation commission. These guidelines may be applied for all alterations, construction, demolition, or repairs affecting the exterior appearance of the property.

(1) *New buildings and additions to existing buildings:* New buildings should be compatible with the architecture of the district. Scale, placement on lots and street setback must conform to the scale, placement and setback of adjacent structures, especially in the context of rows of

buildings and streetscapes. Styles of architecture will be controlled only to ensure that their exterior design, materials, and color are in harmony with neighboring structures.

(2) *Alterations:* Alterations should restore a structure's original elements, materials, and appearance, if economically or physically feasible. Alterations affecting the exterior of a structure should preserve all significant original exterior elements, including building materials, doors, windows, and decorative elements. Elements that are not original, but which may have acquired significance by virtue of age or craftsmanship, should also be preserved. Alterations that disguise or sheath original elements and materials should not be permitted. Storefronts and commercial building facades should be treated as a whole, and alterations to the first floor should be compatible with the upper floors.

(3) *Demolition:* Demolition of past additions that have disguised or sheathed original elements or facades is encouraged, as long as the intention is to restore those elements and facades.

(4) *Relocation of buildings:* Structures shall not be removed from their original site unless there is substantial evidence that it would not be practical or economical to utilize the building on its present site. If a building lies in the path of a public improvement project and if the building meets the requirements for preservation by virtue of its integrity, originality, craftsmanship or age, relocation may be considered as an alternative only after it is determined that the project cannot be altered to avoid the relocation of the historic structure.

(5) *Exterior walls:* A structure's original walls, including masonry, siding, sheathing materials, and exposed foundations, should be maintained and preserved, if feasible. Walls, siding, and sheathing materials that may not be original, but have acquired significance by virtue of age or craftsmanship, should also be maintained and preserved. These walls, siding, and sheathing materials should not be altered, covered or disguised by new building materials unless it is no longer feasible to maintain the significant materials. Masonry should not be painted or stuccoed unless it is no longer feasible to maintain the significant materials. Restoration of original walls, siding and sheathing materials is encouraged. Removal of false facades that cover or disguise original walls and materials is encouraged.

(6) *Decorative and character defining elements:* Original decorative and character defining elements and those that may not be original, but have acquired significance by virtue of age or craftsmanship should be restored, maintained, and preserved, if feasible.

(7) *Doors and windows:* Original doors and windows should not be replaced unless there is substantial evidence that they are no longer serviceable or cannot be restored. Restoration of original entryways that may have been covered, altered, or removed over time is encouraged. Replacement doors and windows that imitate an earlier inappropriate style are discouraged. In general, existing openings should not be covered or relocated, whenever possible. If additional entryways or service doors become necessary, they should be located and designed in a sensitive manner. If it is necessary to expand original openings, it should be accomplished in a manner that respects and complements the surrounding building elements, materials, and colors.

(8) *Porches:* Porches, porticos, stoops, entryways, loading docks and exterior stairways should be of a scale, design, material, and color that complement the existing facade and its individual elements. Loading docks and service entrances should be located inconspicuously and should be considered a part of a building's overall design scheme.

(9) *Roofs:* Rooflines and shapes should not be altered, if feasible. Visible roofing materials should be compatible with other building elements and materials in terms of color, materials, and texture. The use of roofing materials appropriate to the style and period of the building is encouraged. The use of roofing materials that reflect an earlier or later style or period is discouraged.

(10) *Mechanical equipment and weather protection devices:* Mechanical and weather protection devices shall be placed and installed in a manner that is unobtrusive.

(11) *Fences, sidewalks, decorative dividers and walls:* Fences and decorative walls should be placed and scaled in a manner that do not cover, block or damage significant building facades or elements. Fences and walls should be of a style or period that corresponds with the style or period of the building or buildings they serve. Original fences, walls and sidewalks and those that have acquired significance by virtue of age or craftsmanship should not be removed or destroyed and should be maintained and preserved, whenever possible.

(12) *Vacant lots, alleys, and parking areas:* Parking lots, driveways, and other spaces between and around buildings shall be designed and maintained in a manner that does not detract from neighboring buildings and facades. The creation of new parking lots, driveways and parking pads shall be done in a way to minimize their appearance and to complement the buildings they serve and the surrounding neighborhood. Garbage dumpsters, bollards, loading docks and other similar fixtures shall be structurally and cosmetically maintained and shall be placed in a manner that is as inconspicuous as possible.

(13) *Signs and awnings:* Maintenance and preservation of original signs or those that have acquired significance by virtue of age or craftsmanship is encouraged. Signs that disguise, obstruct, or detract from significant facade elements shall not be allowed. Signs and awnings shall be designed to complement the style, materials, and color of the building. Lighting and other illumination shall be properly shielded or diffused to eliminate glare. Individual building mounted lights shall be no brighter than one hundred (100) watts and be mounted no lower than six (6) feet and no higher than nine (9) feet in height. All signs shall be installed in accordance with the provisions of section 30-503.

(s) *Signs.*

(1) *Permit required.* Irrespective of provisions in any ordinance of the city relating to signs, all permanent signs for a landmark or building in a historic district not specified in the designating ordinance must receive a certificate of appropriateness from the historic preservation commission, which shall review the proposed sign in accordance with the following general guidelines. The city manager or his/her designee may approve certificate of appropriateness applications for temporary signs in accordance with section 30-352(k).

(2) *General guidelines.*

a. General sign regulations are included in the City Code. Additional sign restrictions may be included in the ordinance designating a landmark or district.

b. It is not the intent of these standards to create uniformity of signage or to inhibit creative initiative.

c. Signs shall be designed and placed so as to appear an integral part of the building design, and to respect neighboring properties and the district in general. Signs shall be designed with appropriateness relative to the services of the establishment served.

(3) *Recommended signage.*

a. Signs should be maintained if they are determined to be an original part of a building as it was originally constructed.

b. Some signs, though not original to a building may have acquired significance by virtue of their age, design, materials and craftsmanship. Such signs should be maintained and preserved.

c. Some existing signs may not be appropriate, especially if they disguise, obstruct, or detract from significant facade elements.

(4) *Wall signs.* Each ground floor occupant in a building shall have no more than one (1) sign oriented to each street on which the premises has frontage. The sign should identify the predominant use of the occupant or identify the building as a whole.

a. Wall signs may extend the entire length of the facade but shall have a total vertical dimension of no more than two (2) feet, six (6) inches.

b. Wall signs shall be mounted no lower than eight (8) feet above the elevation of the ground floor and no higher than the elevation of the second floor.

c. Wall signs may be applied directly on glass show windows or entry doors. These may be located at any point below the elevation of the second floor.

(5) *Secondary wall signs.* Each occupant in a building may have one (1) or more secondary wall signs. These signs should identify occupants on upper floors or those not considered the primary occupants.

a. Each occupant may have not more than one (1) sign applied directly on glass of upper windows. Upper window signs may consist of individual letters not over six (6) inches in height. Total sign dimensions should be no greater than fourteen (14) inches in height.

b. In addition to upper window signs, each occupant may have one (1) ground floor entry sign located at the entry way with individual letters painted or located directly on glass, door, plaque or directory.

(6) *Illumination.* Any sign lighting shall be properly shielded or diffused so as to eliminate glare.

(7) *Exceptions.* The following are appropriate in addition to those signs listed above:

a. Names of buildings, dates of erection, monumental citations, and commemorative tablets which do not exceed twenty (20) square feet in area when made a permanent integral part of a building.

b. Educational signs not exceeding ten (10) square feet providing bulletin or poster display space, identifying or explaining local history or other processes.

c. Signs that have special aesthetic, artistic or historical merit or appropriateness.

(8) *Projections beyond property line.* There should be no projections beyond the property line other than as described below, or as allowed by other sections of this article.

a. Sun protection/weather protection devices are permitted only in the form of awnings. Awnings should be of canvas, or of a planar surface of metal or similar smooth surface. Awnings should be located no higher than sixteen (16) feet and should extend no lower than eight (8) feet. Awnings should be a color(s) and design that compliments the existing facade and that does not cover or damage significant structural or decorative elements.

b. Individual wall lighting fixtures projecting beyond property lines may be used, providing fixtures are consistent with the period or the design of the building facade; the total wattage per fixture is no more than one hundred (100) watts; the fixture does not emit glare or harsh bright spots; the fixture is mounted no lower than seven (7) feet six (6) inches nor higher than nine (9) feet above the elevation of the ground floor; and the fixture extends from the property line not more than sixteen (16) inches, with no dimensions greater than sixteen (16) inches.

c. The historic preservation commission may adopt a standardized sign which may project beyond property lines and which may be used by all property owners or businesses within a district. Such sign shall be no lower than seven (7) feet six (6) inches nor higher than ten (10) feet above the elevation of the ground floor, shall extend from the property line not more than three (3) feet, and shall have no dimension greater than three (3) feet.

d. Signs already in existence on the date of the adoption of this section.

(t) *Maintenance of historic properties.*

(1) *Ordinary maintenance exclusion.* Nothing in this section shall be construed to prevent the ordinary maintenance or repair of any exterior elements of any building or structure described in this article.

(2) *Definition of ordinary maintenance.* Any work, for which a building permit is not required by law, where the purpose and effect of such work is to correct any deterioration or decay of or damage to a structure or any part thereof and to restore the same, as nearly as may be practicable, to its condition prior to the occurrence of such deterioration, decay or damage.

(3) *Minimum maintenance requirement.* All buildings and structures designated by city ordinance as "H" shall be preserved against decay and deterioration and free from certain structural defects in the following manner, by the owner thereof or such other person or persons who may have the legal custody and control thereof. The owner or other person having legal custody and control thereof shall repair such building if it is found to have any of the following defects:

a. Those which have parts thereof which are so attached that they may fall and injure members of the public or property.

b. Deteriorated or inadequate foundation.

c. Defective or deteriorated flooring or floor supports or flooring or floor supports of insufficient size to carry imposed loads with safety.

d. Members of walls, partitions or other vertical supports that split, lean, list or buckle due to defective material or deterioration.

e. Members of walls, partitions or other vertical supports that are of insufficient size to carry imposed loads with safety.

f. Members of ceilings, roofs, ceiling and roof supports or other horizontal members which sag, split or buckle due to defective material or deterioration.

g. Members of ceilings, roofs, ceiling and roof supports or other horizontal members that are of insufficient size to carry imposed loads with safety.

h. Fireplaces or chimneys which list, bulge or settle due to defective material or deterioration.

i. Fireplaces or chimneys which are of insufficient size or strength to carry imposed loads with safety.

j. Deteriorated, crumbling or loose plaster.

k. Deteriorated or ineffective waterproofing of exterior walls, roofs, foundations or floors, including broken windows or doors.

l. Defective or lack of weather protection for exterior wall coverings, including lack of paint, or weathering due to lack of paint or other protective coating.

m. Any fault or defect in the building which renders the same structurally unsafe or not properly watertight.

(4) *Public safety exclusion.* None of the provisions of this article shall be construed to prevent any measures of construction, alteration or demolition necessary to correct or abate the unsafe or dangerous condition of any structure, other feature or part thereof, where such condition has been declared unsafe or dangerous by the chief building official or the fire department, and where the proposed measures have been declared necessary, by such department or departments, to correct the condition; provided, however, that only such work as is reasonably

necessary to correct the unsafe or dangerous condition may be performed pursuant to this section. In the event any structure or other feature shall be damaged by fire or other calamity, or by act of God or by the public enemy, to such an extent that, in the opinion of the aforesaid department, it cannot reasonably be repaired and restored, it may be removed in conformity with normal permit procedures and applicable laws.

(5) *Notice of nonmaintenance.* If a designated local historic district or landmark property is not being maintained, the owner of the property or entity having legal custody thereof shall be notified by the city manager or his/her designee. The notice shall be by certified mail and shall specify each item that fails to meet the minimum maintenance requirements. The owner or entity having legal custody of the property shall have thirty (30) days from the date of the notice to comply with the minimum maintenance requirements. The city manager or his/her designee, for good cause shown, may extend the thirty-day period. If, after the original thirty-day period or any extension granted by the city manager or his/her designee, the property should fail to meet the minimum maintenance requirements, the owner or entity having legal custody of the property shall be in violation of this section and subject to the penalties set forth in section 30-205

(u) *Design subcommittee.* The historic preservation commission may establish a subcommittee of five (5) members including historic preservation members and design professionals to meet with applicants at any time during the application process in order to review and comment on proposed applications. An applicant may request a meeting with the subcommittee before or during the review of any application.

(Ord. No. 4109, art. 2, 3-1-10; Ord. No. 4306, arts. 1—8, 4-16-12)

## Sec. 30-353. CX, adult entertainment overlay district.

(a) *Purpose.* CX overlay district is intended for the use of adult entertainment uses.

(b) *Definitions.*

(1) *Adult,* as used in this section, means persons who have attained the age of at least eighteen (18) years.

(2) *Adult bookstore* means an establishment or business having as a predominant part of its stock in trade, books, magazines, photographs, pictures and other periodicals which are distinguished or characterized by their emphasis on matter depicting, describing or relating to "specific sexual activities" or "specified anatomical areas" and limited in sale of such sexual materials to adults.

(3) *Adult motion picture theater* means an enclosed building with a capacity of two (2) or more persons used predominantly for presenting material distinguished or characterized by an emphasis on matters depicting, describing or relating to "specified sexual activities" or "specified anatomical areas" for observation by patrons therein.

(4) *Area zoned for residential use,* for purposes of this section, means an area which is defined as district AG, AG-1, RE, R-1, R-2, R-3, R-4, R-5, RMH, RUMD, CBD or NC.

(5) *Artist-body painting studio* means an establishment or business which provides the services of applying paint or other substance whether transparent or nontransparent to or on the human body when such body is wholly or partially nude.

(6) *Bathhouse* means an establishment or business which provides the services of baths of all kinds, including all forms and methods of hydrotherapy, unless operated by a medical practitioner or professional physical therapist licensed by the State of Missouri.

(7) *Church* means a facility for religious use.

(8) *Massage shop* means an establishment or business which provides the services of massage and body manipulation, including exercises, heat and light treatments of the body, and all forms and methods of physiotherapy, unless operated by a medical practitioner, professional physical therapist or massage therapist licensed by the State of Missouri.

(9) *Modeling studio* means an establishment or business which provides the services of modeling for the purpose of reproducing the human body wholly or partially in the nude by means of photography, painting, sketching, drawing or otherwise.

(10) *Overlay zone* means a zone having boundaries conterminous with or circumscribed by an existing district, which imposes additional limitations or authorizes additional uses otherwise not required or permitted in the district.

(11) *Owning property* means for the purpose of this section, a present freehold or nonfreehold interest in real property.

(12) *School* means for the purpose of this section, a public elementary, secondary, or high school, or university or college; and private schools with curricula equivalent to that of public elementary, secondary or high schools, or universities or colleges.

(13) *Specified sexual activities* means:

a. Human genitals in a state of sexual stimulation or arousal.

b. Acts of human masturbation, sexual intercourse or sodomy.

c. Fondling or other erotic touching of human genitals, pubic region, buttock or female breast.

(14) *Specified anatomical areas* means:

a. Less than completely or opaquely covered:

1. Human genitals, pubic region,

2. Buttocks,

3. Female breast area below a point immediately above the top of the areola.

b. Human male genitals in a discernible turgid state even if completely and opaquely covered.

(c) *Uses regulated.* Adult bookstores, adult motion picture theaters, bathhouses, massage shops, modeling studios and artists-body painting studios, as herein defined, shall be located only in district CX, as established by this section. Such districts are overlay zones and may only be established by the city council in district C1, C2, M1 or M2.

(d) *One thousand foot distance limitation waiver.*

(1) No adult bookstore, adult motion picture theater, bathhouse, massage shop, modeling studio or artist-body painting studio, shall be established within one thousand (1,000) feet of any church, school or area zoned for residential use.

(2) No more than two (2) of the uses regulated by this section may be located within one thousand (1,000) feet of each other.

(3) The distance limitations set forth in paragraphs (1) and (2) of this subsection may be waived if the person applying for the waiver shall file with the city planning and zoning commission a petition which indicates approval of the proposed regulated use by fifty-one (51) percent of the persons residing on or owning property within a radius of one thousand (1,000) feet of the location of the proposed use. The city planning and zoning commission shall adopt rules and regulations governing the procedure for the securing of the petition of consent provided for in this subsection. The rules shall provide that the circulator of the petition requesting a waiver shall subscribe to an affidavit attesting to the fact that the petition was circulated in accordance

with the rules of the city planning and zoning commission and that the circulator personally witnessed the signatures on the petition and that the same were affixed to the petition by the person whose name appeared thereon. The city planning and zoning commission shall not consider the waiver of locational requirements set forth hereinabove until the above-described petition shall have been filed and verified.

(e) *Public decency and morals ordinance not repealed.* No provision of this section shall be construed to repeal or amend any other ordinance of the city dealing with obscenity, pornography, lewdness, or any other ordinance relating to morals, or any part thereof.

(Ord. No. 4109, art. 2, 3-1-10; Ord. No. 4206, art. 30, 3-7-11)

## Sec. 30-354. IO, increased occupancy overlay district.

(a) *Purpose.* This district is for areas that are highly desirable for concentrated mixed residential needs. While this high concentration of mixed uses can lead to vibrancy of the neighborhoods, these different uses within areas designated to be single-family have the potential for conflicts. It is important that activities associated with this type of higher mixed residential use do not negatively impact the surrounding neighborhood. This overlay district is intended to allow for additional unrelated person per single-family household. This district permits increased densities in these single-family districts without disturbing the densities in other residential districts when they are located elsewhere in the city. This overlay district also addresses: parking design and other aspects of rental life to try and alleviate disturbance with surrounding single-family private residences.

(b) *Permitted uses.*

(1) Single-family detached dwellings.

(2) Additional unrelated persons, with an average of no more than one (1) additional unrelated person for every two (2) bedrooms. If there are an odd number of bedrooms, one (1) additional unrelated person will be allowed due to that odd number. For example, a five (5) bedroom house will be allowed to have three (3) additional unrelated persons.

(c) *Permitted uses (accessory).*

(1) As permitted in underlying zoning district or districts.

(d) *General provisions.*

(1) An increased occupancy overlay district may be enacted in conjunction with any underlying zoning district or districts within the city in accordance with the provisions of this section. All regulations of the underlying zoning district shall apply to property within the increased occupancy overlay district.

(2) The increased occupancy overlay district shall be identified on the official zoning map by the suffix "IO".

(3) An application for designation as an increased occupancy overlay district may be initiated by:

a. A petition duly signed and acknowledged by the owners of fifty-one (51) percent or more of the areas of land within the boundaries of the proposed overlay district, provided that it includes at least fifty-one (51) percent of the owners of record of the subject properties; and

b. A statement documenting the conditions justifying increased occupancy designation and setting forth the purposes of such a designation; and

c. The general design guidelines that are proposed to govern the development or redevelopment of properties within the overlay district.

(4) The designation ordinance shall identify the overlay district boundaries, which shall be compact, contiguous, uniform, and shall follow streets and alleys, rivers and creeks, railroads, property lines and city boundary lines. The designation ordinance shall include regulations and guidelines which apply to new construction as well as to additions, alterations, rehabilitation, conservation and renovation of existing structures.

(e) *Standards.*

(1) For each additional unrelated person above the general definition of family, one (1) additional off-street parking stall is required and shall conform to all city off-street parking regulations.

(2) Refuse storage areas shall not be located in the front yards and shall be screened from view.

(3) The division of any single unit dwelling into separate or additional dwellings is prohibited. The general intent of the structure shall remain intact.

(4) Any other design requirements applicable in the specific underlying zoning district with which this district is combined.

(5) Minimum district size: Two (2) acres, consisting of contiguous lots.

(Ord. No. 4109, art. 2, 3-1-10)

## Sec. 30-355. DCC, downtown commercial corridor overlay district.

(a) *Purpose.* This overlay district is designed to preserve the commercial integrity of major corridors in the downtown area. While this district permits residential uses on upper floors of buildings, or in the rear areas of the street level of buildings, commercial and retail uses on the street level storefronts promote the commercial integrity of these major corridors.

(b) *Permitted uses.*

(1) Residential uses, on upper floors only and rear of street level of buildings only.

(c) *Special uses.*

(1) First floor residential street frontage may be permitted in new construction and redevelopment projects.

(Ord. No. 4206, art. 31, 3-7-11)

## ARTICLE 4. SUPPLEMENTAL DISTRICT REGULATIONS

Sec. 30-401. Special use permits.

Sec. 30-402. Reserved.

Sec. 30-403. Accessory structures and uses.

Sec. 30-404. Telecommunication towers; standards.

Sec. 30-405. Home occupations.

Sec. 30-406. Temporary uses.

Sec. 30-407. Nonconforming uses.

Sec. 30-408. Home day cares.

Sec. 30-409. Excursion or floating gambling facilities.

Sec. 30-410. Alternative energy systems.

Sec. 30-411. In-home elderly care.

Sec. 30-412. Guest houses.

Sec. 30-413. Height and area exceptions and modifications.

### Sec. 30-401. Special use permits.

(a) *Purpose.* Subject to the provisions of this section, the city council may by ordinance on its own motion or on application grant a special use permit for the special uses specifically identified in each zoning district from which the uses are otherwise prohibited by this chapter. The city council shall impose appropriate conditions and safeguards for the issuance of the special use permit, which may include a specified period of time for the permit, a limitation of the persons who may carry out such use, and limitations upon or requirements for the size or design of buildings and other improvements upon the property, all for the purpose of conserving and protecting property and property values in the neighborhood.

(b) *Application for special use permit.* Applications for special use permits shall be made and processed in the same manner as provided in section 30-206 relating to applications for district changes.

(1) The city council shall determine whether such building or use will:

a. Substantially increase traffic hazards or congestion;

b. Substantially increase fire hazards;

c. Adversely affect the character of the neighborhood;

d. Adversely affect the general welfare of the community; and

e. Overtax public utilities.

(2) If the council's finding is negative as to all the subject referred to in this section, the application may be granted; if affirmative as to any subject, then such special use permit shall be denied.

(3) Any proposed special use shall otherwise comply with all the regulations set forth in this chapter for the district in which such use is located.

(Ord. No. 4109, art. 2, 3-1-10)

## Sec. 30-402. Reserved.

## Sec. 30-403. Accessory structures and uses.

(a) *General provisions.* All accessory structures and uses shall be incidental and subordinate to the primary use permitted in the district and shall be located on the same lot as the principal use or structure. No accessory structure or use shall be allowed unless it satisfies the requirements of the zoning district in which it is to be located. Accessory structures and uses shall not be constructed or established upon a lot until the principal buildings, structure or use has been constructed or established, and shall not be used unless the principal structure or use is being used or operated.

(b) *Standards; residential districts.* Except as set out in subsection (1)(d) below, no more than one (1) accessory structure shall be allowed per lot. All accessory structures shall meet the setback requirements of the underlying zoning district. In addition, one minor accessory structure no larger than one hundred fifty (150) square feet in area shall be allowed at any location on each lot. Lots zoned AG, agriculture district or AG-1, exclusive agricultural district, shall not be subject to the limitations contained in this section.

(1) Maximum size: All accessory structures within any residential district shall comply with the following maximum building footprint requirements:

a. No greater than eight hundred (800) square feet on lots less than one-half (½) acre;

b. No greater than one thousand (1,000) square feet on lots one-half (½) acre to one (1) acre;

c. No greater than one thousand five hundred (1,500) square feet on lots greater than one (1) acre, but less than two (2) acres; and

d. Lots having two (2) or more acres are allowed up to four (4) accessory structures, providing the footprints of all accessory structures do not exceed a total of two thousand five hundred (2,500) square feet.

(2) Maximum height: All accessory structures within any residential district shall comply with the following maximum height requirements:

a. On lots up to one (1) acre, the maximum height shall be fifteen (15) feet.

b. On lots with one (1) or more acres, the maximum height shall not exceed the height of the primary structure.

(3) Residential swimming pools and landscape features with water greater than two (2) feet in depth shall be allowed in the rear or side yard with the following provisions:

a. It must be located at least five (5) feet from the property line;

b. It must be located at least twenty (20) feet from the primary structure on any adjoining lot;

c. It must be enclosed by a four-foot high fence with a secured gate.

(Ord. No. 4109, art. 2, 3-1-10; Ord. No. 4206, art. 32, 3-7-11)

## Sec. 30-404. Telecommunication towers; standards.

(a) A special use permit is required for a telecommunications tower in all zoning districts within the City of Cape Girardeau. No telecommunication towers shall be allowed on any right-of-way. The location of a telecommunications tower is subject to the following conditions:

(1) The applicant shall identify the location of the proposed tower on a map showing the other tower locations within the city. If the proposed tower is located within one (1) mile of an existing tower, the applicant must submit evidence demonstrating why the existing tower is not suitable or available for co-use.

(2) The tower shall be designed to accommodate the co-use of at least two (2) other providers and made available to other providers for co-use for reasonable terms. The applicant shall provide a notarized statement as to the availability of the tower for co-use.

(3) The design of the tower and accessory structures shall maximize the use of building materials, colors, textures, screening and landscaping that effectively blend the facilities within the surrounding natural setting and environment.

(4) The tower shall be set back from the right-of-way line of any public street up to a distance equal to the height of the tower. The tower shall be set back from any structure a minimum distance equal to one and one-half (1½) times the height of the tower.

(5) Towers or antennas located on structures shall not extend more than thirty (30) feet above the highest point of the structure.

(6) The tower and antennas shall meet all federal regulations, including, but not limited to, Federal Communication Commission (FCC) emission standards and Federal Aviation Administration (FAA) lighting requirements.

(7) Any tower that is no longer in use for a telecommunications purpose shall be removed at the owner's expense. The owner of the tower shall provide the city with a copy of the notice to the FCC of intent to cease operations. All obsolete and abandoned towers and accessory facilities shall be removed within six (6) months of cessation of use. In the case of multiple operators sharing use of a single tower, this provision shall not become effective until all users cease operations. The applicant shall submit an executed agreement to ensure compliance with this requirement. If the owner fails to remove an obsolete tower, the city may cause the tower to be removed and issue a special assessment tax bill for the cost of said removal, which shall be a lien against the real property affected.

(Ord. No. 4109, art. 2, 3-1-10; Ord. No. 4206, art. 33, 3-7-11)

## Sec. 30-405. Home occupations.

(a) *Purpose.* A home occupation is a permitted use in all residential zoning districts. A home occupation may be continued for only so long as it is conducted lawfully and does not produce conditions which cause a nuisance. Violations of this section may result in the loss of the ability to operate the home occupation. No home occupation shall be permitted if it:

(1) Changes the outside appearance of the dwelling or is visible from the street;

(2) Generates traffic, parking, sewage, water use, or noise in excess of what is normal in a residential neighborhood;

(3) Creates a hazard to person or property, results in electrical interference, or becomes a nuisance;

(4) Results in outside activities, storage or display.

(b) *Standards.* Unless otherwise regulated elsewhere in this chapter, a permitted home occupation shall be an activity which is clearly incidental and secondary to the use of the premises as a residence, provided that:

(1) The activity employs no more than one (1) employee at any given time, other than family members residing in the dwelling unit.

(2) The number of vehicle trips generated by business customers, clients and vendors who visit the residential dwelling unit does not exceed twelve (12) trips per day on a weekly average, occurring only between the hours of 7:00 a.m. and 10:00 p.m., excluding trips referenced in subparagraph five (5) herein.

(3) Direct sale parties or gatherings (such as Tupperware) are limited to once a month and held only between the hours of 9:00 a.m. and 10:00 p.m.

(4) There is no outside appearance of a home occupation including, but not limited to, parking, signs or lights. This restriction shall not apply in the agricultural zone districts.

(5) The volume of deliveries or truck traffic is not in excess of two (2) per day on a weekly average, excluding regular postal service and trips referenced in subparagraph (2) herein. Semitractor-trailer use for deliveries is not permitted. This restriction shall not apply in the agricultural zone districts.

(6) The activity is conducted wholly within a main building or accessory building.

(7) The activity uses no equipment or processes that create noise, vibration, glare, fumes, smoke, dust, odors, or electrical interference, including interference with radio or television reception, detectable by any neighbors.

(8) The activity does not generate any solid waste or sewer discharge, in volume or type, which is not normally associated with residential use in the neighborhood.

(9) The activity does not involve an illegal activity.

(10) The activity does not require the receipt, storage, or shipping of any hazardous materials in quantities exceeding those allowable in the current city fire code.

(Ord. No. 4109, art. 2, 3-1-10)

## Sec. 30-406. Temporary uses.

(a) *Purpose.* This section is designed to provide for certain land uses and structures which are needed, or are in place, for only short periods of time. These uses are permitted in all zoning districts because they are useful or necessary, and because they do not permanently impact surrounding property.

(b) *Temporary uses allowed.* The following temporary uses of land are permitted in any zoning district, subject to the specific regulations and time limits which follow, and subject to the other applicable regulations of the district in which the use is to occur.

(1) Contractors office, equipment trailers and sheds (containing no sleeping or cooking accommodations) accessory to a construction project are permitted only during the duration of such project and they shall be located on the same property as the construction project. All such temporary structures shall be removed upon occupancy of the completed construction, or upon completion or abandonment of the construction work, whichever occurs first.

(2) Real estate office (containing no sleeping or cooking accommodations, unless located in a model dwelling unit) incidental to a new housing or other development, provided such office may continue only until the sale or lease of all dwelling units or nonresidential space in the development is completed.

(3) Retail sales, such as bazaars, craft sales, fireworks and Christmas tree sales, provided that such activities do not exceed a total of thirty (30) days within a twelve-month period.

(4) Garage or yard sales, provided that no more than four (4) garage or yard sales per calendar year shall be allowed, and provided that each garage or yard sale shall not exceed a period of three (3) consecutive days.

(5) Street festivals, subject to the following restrictions:

a. When a residential district adjoins the street where the festival is to be held, only one (1) festival shall be allowed in any twelve (12) consecutive month period. No such festival shall exceed a period of three (3) consecutive days, exclusive of a reasonable period to prepare the street prior to the event and to restore the street after the event is finished.

b. Activities related to the event shall be limited to a daily period extending from 7:00 a.m. to 11:00 p.m.

c. All lighting, activities, noise or increased traffic associated with the festival shall not unreasonably disturb surrounding residential properties.

d. The festival shall not litter or create a nuisance to adjacent or nearby properties, or violate any other provision of the City Code.

(Ord. No. 4109, art. 2, 3-1-10)

## Sec. 30-407. Nonconforming uses.

(a) *Purpose.* The purpose of this section is to recognize the legitimate interests of those who have lawfully established structures or uses, which are caused to be nonconforming by the adoption of this chapter, by permitting such nonconformities to be continued. However, nonconformities may adversely affect the orderly development, maintenance, use, and taxable value of other properties in their vicinity - properties that are in compliance with these zoning regulations. Therefore, it is necessary to subject nonconforming uses to restrictions that are designed to prevent the expansion or extension of such uses, and to enhance the probability that such uses will eventually be converted into conforming uses.

(b) *Standards for nonconforming uses.*

(1) Any structure or use made nonconforming by the adoption or subsequent amendment of this Code shall be allowed to continue without interruption or alteration subject to the provisions of this article.

(2) No nonconforming use shall be enlarged, extended, reconstructed, or structurally altered, except for ordinary maintenance, unless required to do so by law.

(3) When a structure, the use of which does not conform to the provisions of this chapter, is damaged by fire, explosion, act of God, or the public enemy, to the extent of more than eighty (80) percent of its fair market value, it may only be restored upon the issuance of a permit by the board of adjustment. Such restoration must be at least equal to the condition of the structure immediately before the damage occurred.

(4) Whenever a nonconforming use is superseded by a permitted use, the nonconforming use shall not be resumed.

(5) Any nonconforming use which is discontinued, or its normal operation stopped, for a period of two hundred seventy-four (274) consecutive days shall not be resumed, but the use of the property shall thereafter conform to the uses permitted in the district in which it is located.

(Ord. No. 4109, art. 2, 3-1-10)

## Sec. 30-408. Home day cares.

(a) *Standards.*

(1) The home day care facility shall comply with the state regulations for home day cares and be properly licensed.

(2) The home day care facility shall be located in the dwelling used by the operator as his or her private residence.

(3) One (1) registered nonresident adult assistant may be on call for emergencies when required by the Missouri Division of Family Services for licensing purposes.

(4) The operator of the home day care shall obtain a certificate of occupancy from the city, provided that all applicable health and safety regulations are complied with. Such certificate of occupancy shall be renewed yearly and prominently displayed on the premises.

(Ord. No. 4109, art. 2, 3-1-10)

## Sec. 30-409. Excursion or floating gambling facilities.

(a) *Standards.*

(1) Accessory uses associated with an excursion gambling boat or floating gambling facility shall include the following:

a. Boat support facilities;

b. Docking or mooring facilities;

c. Employee support facilities;

d. Ground transportation facilities;

e. Passenger ticketing and reception facilities;

f. Parking facilities;

g. Security facilities; or

h. Signs, including those attached to a building or other structure, a boat or floating facility, or otherwise placed on the premises constituting an excursion gambling boat or floating facility site.

(b) *Off-street parking.* Off-street parking and loading facilities shall be provided as specified in section 30-501, except that the requirements for off-street parking for an excursion gambling boat or floating facility and its accessory uses shall be one and one-half (1½) spaces for every two (2) passengers, based on maximum occupancy, plus one (1) space per employee on the maximum shift. In addition, full-size bus parking spaces shall be provided as required by the planning and zoning commission and city council.

(c) *Site development plan.* The developer shall submit a formal site plan for review, which includes, but is not necessarily limited to, the following:

(1) Maps and other graphics indicating the boundaries of the development and all properties to be included, indicating whether such properties are owned, leased, optioned, or proposed for such.

(2) The locations and general sizes of all buildings, structures, parking lots and other facilities comprising the development, including data on size, facilities, and occupancy limits of the planned excursion gambling boat or floating facility, and accessory uses.

(3) Evidence that the development contains sufficient land to provide for any necessary or proposed land-side development and support facilities, including parking, and the development includes sufficient river frontage to accommodate the location and operation of the planned excursion gambling boat or floating facility.

(4) An impact analysis including, but not limited to, expected access routes, traffic volumes, peak hours of operation, needed road or street improvements and traffic controls necessary to accommodate the proposed uses and traffic volumes, and plans for on-site security and disaster response.

(d) All buildings and permanently moored structures shall comply with applicable standards of the city's building codes. Further, no occupancy permit for any accessory use set forth in this section shall be issued prior to the issuance of occupancy permits for all new land-based permanent structures proposed as a part of the development. The city council may, however, at its discretion approve a temporary occupancy permit for any accessory use for a period of one (1) year if the required land-based structures are not completed.

(Ord. No. 4109, art. 2, 3-1-10)

## Sec. 30-410. Alternative energy systems.

(a) *Solar energy systems and solar and earth-sheltered structures.* Solar energy systems and solar and earth-sheltered structures shall be a permitted use in all districts, provided the system is in compliance with minimum lot requirements, is located on a structure or in rear or side yards, and is maintained in good repair as an integral part of the structure.

(b) *Wind energy conversion systems (WECS).* Wind energy conversation systems require a special use permit in all districts. Each application for a special use permit (SUP) shall be accompanied by a dimensional representation of the tower, including the conversion system, base, footings and an accurate plan containing the following:

(1) Property lines;

(2) Proposed location of tower on site;

(3) Location of all existing structures on side and on adjoining properties;

(4) All above and below ground utilities; and

(5) All adjacent utility easements.

(c) *Height for wind energy conversion systems.* The total height of the tower (including any portion of the rotor or axis extending above the tower) shall not exceed the horizontal distance between the base of the tower and the nearest lot line or building line, whichever is closer.

(d) *Wind energy conversion system access.* Climbing access to the wind energy conversion system tower shall be limited either by means of a fence six (6) feet high around the base with a locking portal, or by limiting the tower climbing apparatus to not lower than twelve (12) feet above the ground.

(Ord. No. 4109, art. 2, 3-1-10)

## Sec. 30-411. In-home elderly care.

In-home elderly care is designed to allow for elderly or handicapped persons to reside in and be cared for by the residents of a dwelling unit.

(a) *Standards.*

(1) Each elderly or handicapped person shall have a separate bedroom in the dwelling unit and have convenient access to a bathroom.

(2) No separate cooking facilities shall be provided in the dwelling unit for the elderly or handicapped persons.

(Ord. No. 4109, art. 2, 3-1-10)

## Sec. 30-412. Guest houses.

(a) *Purpose.* It is the purpose of these regulations to establish specific standards for guest houses. The intent is to preserve the integrity of the existing residential areas while allowing residents the opportunity to establish guest houses on properties that can accommodate this use.

(b) *Standards.*

(1) A guest house shall be used only by the occupants of the principal dwelling, their nonpaying guests or domestic employees. The guest house shall not be rented, and a deed restriction specifying this requirement shall be recorded by the property owner prior to occupancy of the structure.

(2) A guest house may be permitted only on properties which contain an existing owner-occupied single-family detached dwelling unit. Only one (1) guest house may be permitted per lot.

(3) Guest houses shall be located in the rear yard of the property, meet all setback requirements of the zoning district, and shall not extend into the required front or side yards.

(4) The floor area of a guest house shall not exceed five hundred (500) square feet.

(5) The guest house shall be designed and constructed with materials that are comparable to and compatible with the primary dwelling unit.

(6) The driveway serving the primary dwelling unit shall also serve the guest house.

(Ord. No. 4109, art. 2, 3-1-10)

## Sec. 30-413. Height and area exceptions and modifications.

(a) *Generally.* The regulations hereinafter set forth in this section qualify or supplement, as the case may be, the district regulations appearing elsewhere in this chapter.

(b) *Height.* The height regulations heretofore established shall be adjusted in the following cases:

(1) Schools, public buildings and institutions may be erected to any height in any district in which they are permitted, provided front and rear yards are increased in depth and side yards are increased in width two (2) feet for each foot of height that the building exceeds the height regulations of the district in which it is located.

(2) The height regulations prescribed herein shall not apply to grain elevators, television and radio towers, church spires, belfries, monuments, tanks, water and fire towers, stage towers or scenery lofts, cooling towers, ornamental towers and spires, chimneys, elevator bulkheads,

smokestacks, conveyors and flagpoles, provided the height of these structures does not violate any ordinance of the city.

(3) The limitation on number of stories shall not apply to buildings used exclusively for storage purposes, provided such buildings do not exceed the height in feet permitted in the district in which they are located.

(c) *General area exceptions and modifications.* The area regulations heretofore established shall be adjusted in the following cases:

(1) Every part of a required yard shall be open to the sky, unobstructed by a building, except for accessory buildings in a rear yard, and except for the ordinary projection of sills, belt courses, cornices, and ornamental features not to exceed twelve (12) inches.

(2) Open or lattice-enclosed fire escapes, required by law, projecting into a yard not to exceed three and one-half (3½) feet and the ordinary projection of chimneys and pilasters shall be permitted by the city engineer when placed so as not to obstruct light and ventilation.

(3) Terraces, uncovered porches and ornamental features which do not extend more than three (3) feet above the floor level of the ground (first) story may project into a required yard, provided these projections be distant at least two (2) feet from the adjacent side lot line.

(4) Where a lot or tract is used for educational, institutional, motel, hotel, commercial, or industrial purposes, more than one (1) main building may be located upon the lot or tract, but only when such buildings conform to all open space requirements around the lot for the district in which the lot or tract is located.

(d) *Front yards.* The front yards heretofore established shall be adjusted in the following cases:

(1) Where forty (40) percent or more of the frontage on the same side of a street between two (2) intersecting streets is developed with buildings that have observed a front yard greater in depth than herein required, new buildings shall not be erected closer to the street than the average front yard so established by the existing buildings, except in the M-1 and M-2 districts.

(2) Where forty (40) percent or more of the frontage on one (1) side of a street between two (2) intersecting streets is developed with buildings that do not have a front yard as described above, then:

a. Where a building is to be erected on a parcel of land that is within one hundred (100) feet of existing buildings on both sides, the minimum front yard shall be a line drawn between the two (2) closest front corners of the adjacent building on each side, or

b. Where a building is to be erected on a parcel of land that is within one hundred (100) feet of an existing building on one (1) side only, such building may be erected as close to the street as the existing adjacent buildings, or

c. Where a building is to be erected on a parcel of land that is more than one hundred (100) feet from any building on either side, a front yard having a depth of not less than twenty-five (25) feet shall be provided.

(3) Interior lots abutting on two (2) streets shall provide the required front yard on both streets.

(4) On corner lots, a front yard shall be provided on each street except on lots of record.

(5) An unenclosed balcony or unenclosed porch may project into a front yard for a distance not exceeding ten (10) feet. An enclosed vestibule containing not more than forty (40) square feet may project into a front yard for a distance not to exceed four (4) feet.

(6) Vehicle fueling station pumps, pump islands and canopies may be located within a required yard provided they are not less than fifteen (15) feet distant from any street line and not less than fifty (50) feet distant from any R district.

(7) In any R district, no fence, structure, or planting shall be maintained within thirty (30) feet of any street intersection.

(e) *Side yards.* The side yards heretofore established shall be adjusted in the following cases:

(1) Commercial or industrial buildings used in part for dwelling purposes shall provide side yards not less than five (5) feet in width unless every dwelling room opens directly upon a front yard, rear yard, or court.

(2) For the purpose of the side yard regulations, a two-family, or a multifamily dwelling shall be considered as one (1) building occupying one (1) lot.

(3) Whenever a lot of record at the time of the passage of this chapter has a width of less than fifty (50) feet, the side yard on each side of a building may be reduced to a width of not less than ten (10) percent of the width of the lot, but in no instance shall it be less than four (4) feet.

(4) On corner lots of record, there shall be a side yard adjacent to the side street of not less than ten (10) feet.

(5) A porte cochere, carport or canopy may project into a required side yard, provided every part of such porte cochere, carport or canopy is unenclosed except for necessary structural supports and not less than five (5) feet from any side lot line.

(f) *Rear yards.* The rear yards heretofore established shall be adjusted in the following cases: Where a lot abuts upon an alley, one-half (½) the alley width may be considered as part of the required rear yard.

(g) *Lot per family.* Where a lot of record at the time of the effective date of this chapter or a lot in a subdivision which the city council has officially approved and agreed to accept at the time of the effective date of this chapter has less area or width than herein required in the district in which it is located, such lot may nonetheless be used for a one-family dwelling or for any other nondwelling use permitted in the district which it is located.

(Ord. No. 4109, art. 2, 3-1-10)

## ARTICLE 5. RESERVED [2]

---

FOOTNOTE(S):

---

--- (**2**) ---

**Editor's note—** Article 34 of Ord. No. 4206, adopted March 7, 2011, repealed art. V, in its entirety. Former art. V was titled "Other Regulations", was comprised of §§ 30-501—30-504, and derived from §§ 30-37, 30-40 of the 1967 Code; Ord. No. 739, adopted Aug. 21-1989; Ord. No. 1244, adopted Oct. 5, 1992; Ord. No. 1551, adopted June 20, 1994; ord. No. 1779, adopted Sept. 18, 1995; Ord. No. 2143, adopted April 21, 1994; Ord. No. 3054, adopted March 17, 2003; Ord. No. 3451, adopted Feb. 22, 2005; Ord. No. 3643, adopted April 17, 2006; Ord. No. 3711, adopted Aug. 21, 2006; Ord. No. 3723, adopted Sept. 18, 2006; Ord. No. 4109, adopted March 1, 2010; Ord. No. 4149, adopted Aug. 16, 2010; and Ord. No. 4178, adopted Dec, 6, 2010. (Back)

ARTICLE 5. RESERVED

# CITY OF CAPE GIRARDEAU

## STANDARD SPECIFICATIONS

The Original
*Standard Specifications* is
sealed
and signed by
Kelly Green P.E.
City Engineer,
May 27, 2010

Issued: May 27, 2010

Technical Specifications ..... S1-S85

**DIVISION 100 - GENERAL SPECIFICATIONS S-1**
SECTION 101 – GENERAL S-1
SECTION 102 - DEFINITION OF TERMS S-2
SECTION 103 – INSPECTION S-3
SECTION 104 - RESPONSIBILITIES OF CONTRACTOR S-4
SECTION 105 - MEASUREMENT & PAYMENT S-6

**DIVISION 200 – EARTHWORK S-8**
SECTION 201 - EROSION CONTROL S-8
SECTION 202 – CLEARING, GRUBBING, AND TRIMMING S-10
SECTION 203 – REMOVAL OF IMPROVEMENTS S-11
SECTION 204 – EXCAVATION S-12
SECTION 205 – EMBANKMENT S-14
SECTION 206 - TRENCH EXCAVATION AND BACKFILL S-15
SECTION 207 - FINAL GRADING S-19
SECTION 208 – SUBGRADE S-20
SECTION 209 - SEED AND MULCH S-20

**DIVISION 300 - AGGREGATES S-24**
SECTION 301 – AGGREGATE-BEDDING S-24
SECTION 302 – AGGREGATE-TRENCH BACKFILL S-24
SECTION 303 – AGGREGATE BASE COURSE S-25
SECTION 304 – ROCK DITCH LINER S-25
SECTION 305 – ROCK BLANKET S-26
SECTION 306 – GABIONS S-27
SECTION 307 – TEMPORARY ROCK DITCH/INLET CHECKS S-28
SECTION 308 – FLOWABLE FILL S-28

**DIVISION 400 – FLEXIBLE PAVEMENT S-30**
SECTION 401 – MATERIALS S-30
SECTION 402 – ASPHALT CONSTRUCTION REQUIREMENTS S-30
SECTION 403 – FIELD QUALITY CONTROL S-32
SECTION 404 – PAYMENT S-32

**DIVISION 500 - PORTLAND CEMENT CONCRETE PAVEMENT (PCCP) S-34**
SECTION 501 – MATERIALS S-34
SECTION 502 - MIX DESIGN S-35
SECTION 503 – BATCHING S-35
SECTION 504 - CONSTRUCTION REQUIREMENTS S-36
SECTION 505 – PAYMENT S-40

**DIVISION 600 – PAVEMENT REPAIR S-41**
SECTION 601 – MATERIALS S-41
SECTION 602 – FLEXIBLE PAVEMENT REPAIR S-41

SECTION 603 – PORTLAND CEMENT CONCRETE PAVEMENT REPAIR S-42
SECTION 604 – PAYMENT S-42

**DIVISION 700 - DRIVEWAYS AND SIDEWALKS S-43**
SECTION 701 – DRIVEWAYS S-43
SECTION 702 - CONCRETE SIDEWALKS S-43
SECTION 703 – PAYMENT S-45

**DIVISION 800 - MISCELLANEOUS STREET CONSTRUCTION S-46**
SECTION 801 – TEMPORARY TRAFFIC CONTROL S-46
SECTION 802 - TRAFFIC SIGNALS S-47
SECTION 803 – STREET LIGHTING S-55
SECTION 804 – TRAFFIC SIGNAGE S-56
SECTION 805 – PAVEMENT MARKING S-57

**DIVISION 900 – STORM SEWERS S-61**
SECTION 901 – STORM PIPES S-61
SECTION 902 – JUNCTION BOXES, INLETS, AND CATCH BASINS S-61
SECTION 903 – PAYMENT S-64

**DIVISION 2000 – WATER MAIN EXTENSION S-66**
SECTION 2001 – GENERAL S-66
SECTION 2002 – MATERIALS S-66
SECTION 2003 – LOCATION S-68
SECTION 2004 – EXCAVATION AND PREPARATION OF THE TRENCH S-70
SECTION 2005 – PIPE LAYING S-70
SECTION 2006 – ANCHORAGE S-71
SECTION 2007 – BACKFILLING S-71
SECTION 2008 – TESTING S-72
SECTION 2009 – PAYMENT S-73

**DIVISION 3000 – SANITARY SEWER MAIN CONSTRUCTION S-74**
SECTION 3001 – SCOPE S-74
SECTION 3002 – MATERIALS S-74
SECTION 3003 – CONSTRUCTION CASTINGS S-76
SECTION 3004 – INSTALLATION S-77
SECTION 3005 – TESTING OF SEWERS S-81
SECTION 3006 – LIFT STATIONS S-83
SECTION 3007 – PAYMENT S-85

# DIVISION 100- GENERAL SPECIFICATIONS

## SECTION 101 - GENERAL

**101.1 Authority**. The City of Cape Girardeau Standard Specifications and Drawings are developed, drawn, and approved by the City Engineer of the City of Cape Girardeau, Missouri, and shall be enforced, and no part thereof altered without approval of said City Engineer or his duly appointed representative.

**101.2 Intent**. The intent of these Specifications is to specify generally the type and quality of all materials, the method and procedure of construction, the inspection and testing methods, and/or the terms of acceptance by the City of Cape Girardeau of any work or extension of any public facilities, that are, or will be, an active part of the facilities owned and maintained by the City of Cape Girardeau, Missouri.

**101.3 Interpretation**. These Specifications and Standard Drawings are intended to be explanatory of each other, but should any discrepancies appear between the Specifications and the Standard Drawings, or between any of the several Standard Drawings themselves, such discrepancies shall be interpreted, explained, and adjusted by the Engineer. Any doubts or misunderstandings as to the meaning or intent of the specifications, or any obscurity in the wording of the same, shall be explained by said Engineer, who shall have the right to correct any errors or omissions in them. When such correction is found necessary for the proper fulfillment of their intentions, the correction to be effective at the time the Engineer shall give notice thereof.

The Engineer may, at his own discretion, furnish additional detail drawings to which the contractor will be required to conform. However, these detailed drawings shall, if given, be only an elaboration or fuller interpretation of the Standard Drawings already on file.

**101.4 Coordination of the Contract Documents.** The documents included in the contract are intended to be complementary and to describe a complete work. If the Engineer determines a conflict exists between the contract documents, the following hierarchy will be applied and the Contractor shall then complete the work according to the interpretation made by the Engineer.

| Hierarchy of the Contract Documents | | |
|---|---|---|
| Job Special Provisions (JSP) | Hold over: | Project Plans,<br>Supplementary Conditions,<br>General Conditions,<br>Standard Specifications and Drawings |
| Project Plans * | Hold over: | Supplementary Conditions,<br>General Conditions,<br>Standard Specifications and Drawings |
| Supplementary Conditions | Hold over: | General Conditions,<br>Standard Specifications and Drawings |
| General Conditions | Hold over: | Standard Specifications and Drawings |

* Calculated dimensions hold over scaled dimensions.

## SECTION 102 - DEFINITION OF TERMS

**102.1 Approved Product List (APL).** A current edition of the approved product list shall be on file with the Engineer. The product list will refer to approved products as authorized by the Engineer. Wherever the word "APL" is used in these specifications, it shall refer to the latest edition of the Approved Product List.

**102.2 City**. The word "City" is used in these Specifications and it shall refer to and designate the City of Cape Girardeau, Missouri, acting through its proper representatives.

**102.3 City Council**. The words "City Council" are used in these Specifications and they shall refer to and designate the duly elected Mayor and Council Members of the City of Cape Girardeau, Missouri.

**102.4 Developer.** A Developer may make improvements within the City Rights-of-Way, in accordance to all applicable regulations.

**102.5 Drawings.** The term "Standard Drawings" is used in these Specifications and it shall refer to the attached Standard Drawings.

**102.6 Engineer**. The word "Engineer" is used in these specifications and it shall refer to and designate the City Engineer of the City of Cape Girardeau, Missouri, or his authorized agents limited by the particular duties entrusted to them.

**102.7 Excavation.** Excavation shall be defined as the removal of materials from the construction area to the lines and grades shown on the Plans.

**102.8 Contractor**. The word "Contractor" is used in these specifications and it shall refer to the individual, company, or corporation to whom the contract for this improvement has been awarded.

**102.9 General Conditions.** Wherever the word “General Conditions” is used in these Specifications, it shall refer to the *Standard General Conditions of the Construction*

*Contract*, prepared by the Engineers Joint Contract Documents Committee, as adopted by the City of Cape Girardeau.

**102.10 Project Plans**. Unless specifically mentioned, the word "Plans" as hereinafter used shall refer to the project Plans that provide in detail the nature of the work to be done.

**102.11 Parkway**. All land within City Right-of-Way except where covered by roadway surfacing or sidewalk.

**102.12 Specifications.** Unless specifically mentioned, the word "Specifications" as hereinafter used shall refer to these Specifications.

**102.13 Subgrade**. The graded soil base upon which a subbase is to be placed.

**102.14 Supplementary Conditions.** The word “Supplementary Conditions” is used in these Specifications, it shall refer to the *Supplementary Conditions EJCDC 1910-8 (1990)*, as adopted by the City of Cape Girardeau.

**102.15 Inspector.** The engineering or technical inspector, or inspectors, authorized by the Engineer, limited in each case to the particular duties entrusted to him or them.

**102.16 Water Division.** Water Division of the Public Works Department of Cape Girardeau, Missouri.

## SECTION 103 - INSPECTION

**103.1** All materials shall be subject to inspection and standard testing by the Engineer, or his authorized agents, before being placed as part of the project. All rejected materials shall at once be removed from the project. Other material shall then be furnished that is in accordance with the provisions and requirements set out in the Specifications.

**103.2** All work shall be subject to inspection by the Engineer, or his authorized agents, for conformance with the provisions and requirements set out in the specifications. The Contractor is to determine the means and methods of construction; however, this does not prevent the Engineer, or his authorized agents, from enforcing these specifications or industry standards of practice.

**103.3** If the Contractor fails or refuses to remove the material as above, or do other acceptable work when ordered, the Engineer shall have the right and authority to stop the Contractor and his men at once.

**103.4** The Contractor shall furnish all necessary facilities should it be advisable to make an examination of the work already completed. The Engineer shall have the right to reject at any time any work or material that may be found faulty; but no inspection or orders given during the progress of the work shall in any way invalidate the Contractor's bond, nor in any way hinder the City from recovering under same.

**103.5** The Contractor shall furnish all reasonable aid and assistance required by the Engineer or his aides for proper inspection and examination of the work and all parts thereof.

## SECTION 104 - RESPONSIBILITIES OF CONTRACTOR

**104.1 General**. All work shall be in the custody and under the charge and care of the Contractor, until work is accepted by the City Council. The Contractor shall rebuild, repair, restore, or make good at his expense, any lost or stolen City owned materials and all injuries or damages to any portion of the work before its completion and acceptance caused by the action of the elements or from any other reason.

**104.2 Instructions.** All instructions to the Contractor relating to the work shall be given through the Engineer and the Contractor shall obey all instructions so given concerning the method of procedure throughout the work.

**104.3 Night, Saturday and Sunday Work**. Non-emergency excavations on arterial and collector streets may not be performed during the hours of 7:00 AM to 8:30 AM and 4:00 PM to 6:00 PM, in order to minimize disruption of traffic flow, unless otherwise approved by the Engineer. Work on the Rights-of-Way shall be performed at such times that will allow the least interference with the normal flow of traffic and the peace and quiet of the neighborhood, and shall not work between the hours of 11:00 PM and 6:00 AM. Saturday work will require the Engineer's written consent. No Sunday or holiday work will be permitted, except in case of great emergency, and then only with written consent of the Engineer.

**104.4 Permits and Licenses**. The City will secure and pay associated fees for environmental permits from State and Federal agencies. The Contractor shall procure all other necessary permits and licenses and give all necessary notices for the lawful prosecution of the work. The Contractor shall pay all charges and fees covering these permits.

**104.5 Laws, Ordinances, Regulations**. The Contractor shall at all times observe and conform to all Federal and State laws, local laws, ordinances, orders, decrees, and regulations existing at the time of or enacted subsequent to the execution of the contract which in any manner affect the prosecution of the work. The Contractor and his surety shall indemnify and hold harmless the City and all of its Officers, Engineers, Representatives, Agents, and Employees against any claim or liability arising from or based on the violation of any such law, ordinance, regulation, order, or decree whether by himself, his employees, or his subcontractors.

**104.6 Lines and Grades**. The Contractor shall be responsible for the proper layout and construction staking of the proposed improvements. Property irons or accurately located and labeled laths shall be provided at key lot corners, particularly at intersections and curves. Improvements shall not be located solely from street centerline markers. The street must be cut or filled to final subgrade prior to installation of the water main extension and/or sewer main installation or otherwise approved by the Engineer. Failure to provide the above requirements will result in suspension of the work.

**104.7 Foreman**. At all times when the work is in progress, the Contractor shall maintain a competent foreman or head-workman on the ground with a copy of the Plans. Instructions given to said foreman or head-workman shall be considered as having been given to the Contractor.

**104.8 Materials, Labor, Tools, Etc.** The Contractor shall furnish, at his own cost and expense, all transportation, tools, labor, materials, and all else requisite to execute and complete the work in the best possible and most expeditious manner according to the Plans.

He shall employ only competent, skilled men, and shall discharge immediately, whenever required to do so by the Engineer, any man considered by the Engineer as incompetent or disorderly, or who shall refuse to obey the instructions as given to the Contractor or his foreman, and shall not again employ such person on the work.

**104.9 Submittals.** The submittal process will be at the sole expense and responsibility of the contractor.

**A. Prior to starting construction.** The proper documentation, such as but not limited to a Preliminary Progress Schedule, a Preliminary schedule of Shop Drawing and Sample Submittals, a Preliminary Schedule of Values, etc., shall be completed and submitted as stated in the General and/or Supplemental Conditions. In addition, a Temporary Traffic Control Plan, Stormwater Pollution Prevention Plan, and a Trench Safety Plan shall be submitted at this time. One copy of each document shall be submitted.

**B. Throughout construction.** The proper documentation, such as updated Progress Schedules, Shop Drawing and Sample Submittals, etc., shall be completed and submitted as stated in the General and/or Supplemental Conditions. In addition, appropriately updated Temporary Traffic Control Plan, Stormwater Pollution Prevention Plan, and Trench Safety Plan shall be submitted at this time. The Contractor shall submit up to six copies of the shop drawing and sample submittals. The Contractor shall follow the submittal procedures as outlined in the General and/or Supplemental Conditions. A Developer shall submit one copy of each approved (by the Developer's Contractor and the Developer's consulting engineer) submittals.

**C. Upon completion of construction and prior to final payment.** All Operating and Maintenance Manuals shall be submitted at this time. The Contractor shall submit up to six copies of each Manual.

**104.10 Traffic Control.** The Contractor shall submit a Temporary Traffic Control Plan to the Engineer for approval prior to beginning construction. Temporary traffic control devices must comply with the latest edition of the *Manual on Uniform Traffic Control Devices* (MUTCD). Temporary traffic control devices must also meet the *Missouri Department of Transportation's (MoDOT) Quality Standards* as shown in the latest edition of *MoDOT Engineering Policy Guide*.

The Contractor shall erect and maintain proper temporary traffic control devices at all times, including but not limited to, warning and detour signs and pavement markings as directed, to guard against any accident in consequence of the work.

The Contractor shall conduct his work so as to interfere as little as possible with traffic

and so as to inconvenience as little as possible the citizens residing along the lines of the work. Access to all driveways shall be maintained during construction except as may otherwise be approved by the Engineer.

**104.11 Cleanup.** The Contractor shall remove all materials and debris from the streets as the work progresses so that the public may have the use of the street as soon as is possible.

The Contractor shall remove all waste, debris, and surplus dirt from the site of the work, and leave the site in a neat and acceptable condition. All areas of disturbed earth shall be seeded and mulched with an acceptable material as described in Section 209 of these Specifications.

Before the work will be considered complete, all rubbish and unused material due to or connected with the construction must be removed by the Contractor, off of City property, subject to approval of the Engineer, and in accordance with applicable Federal, State and local regulations. Property that has been damaged or disturbed by the work shall be restored to the original condition.

**104.12 Acceptance.** Until work is accepted by the City Council it shall be in the custody and under the charge and care of the Contractor. The Contractor shall rebuild, repair, restore, or make good, at his expense, any lost or stolen City owned material, and all injuries or damages to any portion of the work before its completion and acceptance, caused by the action of the elements or from any other reason.

**104.13 Warranty.** For warranty periods, see appropriate Sections of these Specifications.

**104.14 Protection of Property.** Trees, shrubs, fences, lawns, and all other property and surface structures not on the easement shall be protected during construction unless their removal is shown on the Plans or approved by the Engineer. Any cutting of tree roots or branches shall be done only as approved by the Engineer. All materials, including excavated material, shall be placed in a manner that shall not obstruct the work nor endanger the workmen or public, nor obstruct sidewalks, driveways, streets, or other structures.

**104.15 Stockpiled Excavated Material.** Backfill material shall be stockpiled in an orderly manner, a sufficient distance from the trench to prevent slides or cave-ins, but so it will interfere as little as possible with public travel and occupants of adjoining property. All material taken from the trench which is unsuitable for backfilling shall be removed and disposed of by the Contractor, off of City property, subject to approval of the Engineer, and in accordance with applicable Federal, State and local regulations. Proper erosion control methods shall be installed around stockpiled excavated materials.

## SECTION 105 - MEASUREMENT & PAYMENT

**105.1 Engineer's Measurements.** The application for payment will be based on the actual quantities as determined by actual measurements together with the unit prices stipulated in the Bid Form. The application for payment may include such amount as is due to the Contractor on account of a change order.

**105.2 Change Order.** All changes in work whether an addition, deletion or revision in the work, or an adjustment in the contract price or contract times, shall be done in accordance to the General and/or Supplemental Conditions.

# DIVISION 200- EARTHWORK

## SECTION 201 - EROSION CONTROL

**201.1 Scope.** The work covered by this section consists of furnishing all labor, equipment, and materials and performing all operations to construct and maintain measures to prevent erosion damage on the project site and adjacent properties.

**201.2 General Requirements.**

**A. Stormwater Pollution Prevention Plan (SWP3).** The Contractor shall submit SWP3 in accordance to Section 104.9. The Contractor shall prevent erosion of soil on the site and onto adjacent properties that result from construction activities. Effective measures shall be completed and in-place prior to the commencement of clearing, grading, excavation, or any other operation that may disturb the natural flow. See United States Environmental Protection Agency (EPA) website for templates and/or other examples. The SWP3 shall contain sediment and erosion control plan, and description of all construction site activities to prevent stormwater contamination and to control sedimentation and erosion. The SWP3 shall contain, at a minimum, a cover/title page, Project and SWP3 contact information, Site and activity description with a site map, Identification of potential pollutant sources, Description of potential pollutant sources, Description of controls to reduce pollutants, Maintenance and inspection procedures, Records of inspections and follow-up maintenance of BMPs, and SWP3 amendments.

**B. Scheduling.** Work shall be scheduled to expose areas subject to erosion for the shortest period of time possible, and natural vegetation preserved to the greatest extent practicable. Temporary storage and construction buildings, if any, shall be located, and construction traffic routed, to minimize erosion. Temporary, fast-growing vegetation or other suitable ground cover shall be provided as necessary to control runoff subject to Engineer approval.

**C. Temporary Erosion Control.** Erosion control measures consisting of, but not limited to, temporary gravel construction entrance, permanent seeding and sod, channel protection, temporary slope drains, paved flumes, outlet stabilization structures, fabric filter silt fences, temporary straw bales, and temporary sediment traps shall be used as necessary to control runoff and erosion. In addition, reseeding to establish permanent protection shall be done as soon as possible. When the site is inactive for fourteen days, the Contractor shall seed and straw in order to establish temporary or permanent cover per Section 209 of these Specifications. The Contractor may also be required to provide additional erosion control at the site as directed by the appropriate Federal, State and/or local regulatory agency. This additional erosion control work shall be considered a subsidiary obligation of the Contractor and all costs in connection therewith shall be the responsibility of the Contractor.

**D. Permanent Erosion Control.** At the completion of the work, or at such time as the Engineer determines that adequate permanent erosion control measures have been established, the Contractor shall remove the temporary erosion control measures and

properly dispose of, off of City property, subject to approval of the Engineer, and in accordance with applicable Federal, State and local regulations, and at the Contractor's expense. If contractor does not complete this work, even if the contract has been closed, the City reserves the right to file abatement charges. Contractor shall use proper permanent seeding and sod techniques on areas noted on the construction Plans and all other areas disturbed by construction activity, to permanently stabilize graded areas against the effects of erosion. Refer to Section 209 of these Specifications for proper materials and procedures.

**E. Maintenance of Erosion Control.** Maintenance of all erosion control shall be the responsibility of the contractor. Any costs associated with this maintenance shall be the responsibility of the Contractor.

**201.4 Temporary Construction Entrance.** Contractor shall construct temporary construction entrances as indicated on the Plans and other areas as required from the project site to public roads in order to reduce the transport of mud onto the roadway from both vehicular traffic and runoff. Construction of the entrances shall conform to the details shown on the Standards Drawings.

**201.5 Channel Protection/Outlet Stabilization Structures.** The Contractor shall construct outlet and channel protection as indicated on the Plans, and other areas as required, to minimize erosion of the drainage channels. Protection may be made of Aggregates or other viable products as approved by the Engineer. Materials and methods of Aggregates shall conform to Division 300 of these Specifications. Construction of Channel Protection/Outlet Stabilization Structures shall conform to the details shown on the Standard Drawings.

**201.6 Temporary Slope Drains.** The Contractor may employ the use of temporary slope drains to convey concentrated water flows down cut or fill slopes while minimizing erosion. These Temporary Slope Drains shall be placed as indicated on the Plans and other areas as required. The Contractor shall ensure that the structures are properly sized, constructed, and maintained. Construction of the slope drains shall conform to the details shown on the Standard Drawings.

**201.7 Paved Flumes.** The Contractor shall construct paved flumes as indicated on the Plans, and other areas as required, to convey concentrated runoff down relatively flat slopes. Construction of the flumes shall conform to the details shown on the Standard Drawings, and must be a minimum of five feet long, match the direction of flow, and allow for energy dissipation.

**201.8 Temporary Straw Bales.** The Contractor may install straw bales as temporary erosion control devices for minor watersheds. Straw bales should be located to intercept sheet flow as indicated on the Plans or other areas as required. Installation and placement of the straw bales shall conform to the details shown on the Standard Drawings.

**201.9 Temporary Sediment Trap.** The Contractor shall construct temporary sediment traps to trap and retain sediment picked up by storm runoff on the site as indicated on the Plans. The Contractor shall remove sediment from the trap as required to maintain the necessary capacity. Construction shall conform to the details shown on the Standard Drawings.

Sediment shall not be used as fill material.

**201.10 Temporary Rock Ditch/Inlet Check.** The Contractor shall construct rock ditch checks as indicated on the Plans to limit the velocity of runoff in ditches. Construction shall conform to the details indicated on the Standard Drawings. Materials and methods shall conform to Section 307 of the Standard Specifications.

**201.11 Silt Fence.** The Contractor shall construct, install and maintain silt fence as indicated on the Plans to limit the transport of sediment from disturbed construction areas. Construction and maintenance shall conform to the details shown on the Standard Drawings.

**201.12 Temporary Pipe.** The Contractor shall install temporary pipes as indicated on the Plans, to direct the concentrated runoff. Selection of pipe material and size shall be made by the Contractor, and approved by the Engineer, with regard to the cover available and the area to be drained. Construction and maintenance shall conform to the details indicated on the Drawings.

**201.13 Temporary Berm.** The Contractor shall construct temporary berms as indicated on the Plans to limit the transport of sediment from disturbed construction areas. Construction and maintenance shall conform to the details indicated on the Standard Drawings.

**201.14 Sediment Basin.** The Contractor shall construct, install, and maintain sedimentation basins indicated on the Plans. Construction and maintenance shall conform to the details indicated on the Standard Drawings.

**201.15 Other Best Management Practices (BMP).** Other erosion control measures and energy dissipation of discharge flow may be allowed and are encouraged, subject to approval from the Engineer prior to construction.

**201.16 Payment.** Payment for erosion control shall be made at the contract price and shall include the cost of all materials, labor, equipment, installation, relocation, and maintenance, and all else necessary to provide a complete and functional project as outlined on the Plans and specified in these Specifications. If no pay item for erosion control is included in the contract, it shall be considered incidental to the work and no direct payment will be made. Maintenance and effective erosion control will be a condition for recommendation of progress payment applications.

## SECTION 202 – CLEARING, GRUBBING, AND TRIMMING

**202.1 Scope.** The work covered by this section consists of furnishing all labor, equipment, and materials and performing all operations, in connection with removing or altering existing vegetation from the project area. The contractor shall preserve without damage the vegetation designated to remain. All trees, stumps, brush, and hedge not designated to remain shall be cleared, grubbed, or cleared and grubbed as required and shall be disposed of by the Contractor, off of City property, subject to approval of the Engineer, and in accordance with applicable Federal, State and local regulations.

**202.2 Tree Preservation and Protection.** The Contractor shall implement appropriate measures to ensure proper protection of existing trees from damage due to construction activities. Unless otherwise directed by the City, all trees within or near the project limits that are not designated to be removed on the Plans shall be afforded protection. The City reserves the right to change the protection status due to tree health, aesthetics, or other factors, and mark the tree for removal by the Contractor. This shall be considered incidental to the clearing, grubbing, or removal of improvements.

**202.3 Grubbing.** Stumps and roots in fill and cut areas shall be grubbed to a depth of not less than twelve inches below the existing earth grade or the depth of excavation for the new construction. Stump holes shall be backfilled with suitable material and compacted to the approximate density of the adjacent area. Grubbing of borrow areas, channel changes, and inlet and outlet easements will be required only to the extent necessitated by the proposed construction.

**202.4 Stripping.** The Contractor shall strip all areas where excavation or embankment is to be made. Stripping shall include the removal of material such as sod, grass, crop residue, sawdust, and decayed vegetative matter from the surface of the ground. The material shall be stockpiled for future use or disposed of by the Contractor, off of City property, subject to approval of the Engineer, and in accordance with applicable Federal, State and local regulations

**202.5 Burning.** In order for the Contractor to burn cleared/grubbed material on the project site, he shall first obtain from the Cape Girardeau Fire Department and Department of Natural Resources permits for such burning activity. All material that remains after the burning is completed shall be disposed of by the Contractor, off of City property, subject to approval of the Engineer, and in accordance with applicable Federal, State and local regulations.

**202.6 Tree Trimming.** Within the construction limits of the project, the contractor shall trim any tree which does not provide nine feet of vertical clearance above any sidewalk and fourteen feet of vertical clearance above any street unless otherwise approved by the Engineer. Trees shall be shaped at the direction of the Engineer.

**202.7 Payment.** Payment for clearing and grubbing shall be made at the contract unit price and shall include the cost of all materials, labor, equipment, installation, relocation, and maintenance, and all else necessary to provide a complete and functional project as outlined on the Plans and as specified in this section. If no pay item for clearing and grubbing is included in the contract, it shall be considered incidental to the work and no direct payment will be made.

## SECTION 203 – REMOVAL OF IMPROVEMENTS

**203.1 Scope.** The work covered by this section consists of the removal of existing above-grade and below-grade improvements as indicated and as necessary to facilitate new construction. Existing sidewalks, curbs, pavements, soil and structures within the limits of construction shall be removed by the Contractor, as indicated on the Plans.

**203.2 Demolition of Structures.** Demolition of buildings and structures including foundations and slabs shall be specified on the Plans.

**203.3 Pavements.** All pavement types, concrete base courses, curb and gutter sections and driveways, shall be removed in accordance to Division 600 of these Specifications if applicable. Cuts shall not be less than one foot in width. No angle cuts shall be allowed. Sidewalks shall be removed to the joint. Saw-cutting the full depth of existing pavements shall be used to insure the breakage of pavement along straight lines. Sufficient removal shall be made to provide for proper grades and connections in the new work.

**203.4 Underground Pipes.** Abandonment or removal of certain underground pipe or conduits shall be indicated on the Plans. If abandonment is involved, the method of fill and the fill material shall be indicated as well.

**203.5 Disposal.** All removed materials, shall be disposed of by the Contractor, off of City property, subject to approval of the Engineer, and in accordance with applicable Federal, State and local regulations.

**203.6 Payment.** Payment for removal of improvements shall be made at the contract price and shall include the cost of all materials, labor, equipment, installation, relocation, and maintenance, and all else necessary to provide a complete and functional project as outlined on the Plans and as specified in this Section. If no pay item for removal of improvements is included in the contract, it shall be considered incidental to the work and no direct payment will be made.

## SECTION 204 – EXCAVATION

**204.1 Scope.** The work covered by this section consists of excavation of all materials encountered within the limits of the work. Excavation shall be performed in accordance with the specifications and the lines, grades, thicknesses, and typical cross sections shown on the Plans, or established by the Engineer.

**204.2 Classification of Excavated Materials.** Classification of Excavated Materials shall be as follows:

**A. Rock.** Rock is defined as being sandstone, limestone, chert, granite, siltstone quartzite, slate, shale occurring in its natural undisturbed state, hard and unweathered, in ledges six inches or more in thickness or similar material in masses more than 1½ cubic yard in volume. Should rock be encountered in two or more ledges, each ledge being more than six inches thick and with interlying strata of earth, clay, shale, or gravel not more than twelve inches thick in each stratum, the entire volume between the top of the top ledge and bottom of the bottom ledge will be classified as rock.

**B. Other.** All materials not classified as rock shall be unclassified.

**204.3 Existing Utilities.** Prior to excavation, the Contractor shall determine the location of existing underground structures and utilities. Care shall be exercised by the Contractor during excavation to avoid damage to existing structures and utilities. When obstructions that are not shown on the Plans are encountered during the progress of the work and those obstructions interfere so that alteration of the Plans is required, the Engineer will alter the

Plans or order a deviation in line and/or grade or arrange for removal, relocation, or reconstruction of the obstructions. Where the work encounters above or below ground utilities, either mains or services, the Contractor shall contact the proper utility company so that its representative can be on hand to direct the excavation.

If the Contractor damages any utility, the repair to restore the utility to its original condition shall be done at his expense. The Contractor shall furnish temporary support, adequate protection, and maintenance of all underground and surface structures, drains, sewers, and other obstructions encountered. All properties that have been disturbed shall be restored as nearly as practical to the original condition.

**204.4 Excavation.** In areas where earth is encountered at the subgrade elevation, the sub-grade shall be proof-rolled with a loaded scraper or loaded tandem axle dump truck. Any soft or unsuitable material detected by proof-rolling shall be removed and replaced with suitable material, placed and compacted as specified herein.

In areas where shale or limestone is encountered at the subgrade elevation, the subgrade shall be undercut a minimum of six inches and replaced with compacted fill. The fill shall be thoroughly compacted to 95% of maximum dry density at a moisture content ranging from -2 to +3 percent relative to the optimum moisture content as determined by the ASTM D698 Standard Test Method for Laboratory Compaction Characteristics of Soil Using Standard Effort (12,400 ft-lbf/ft3 (600 kN-m/m3)) (i.e. ASTM 698 Standard Proctor Test).

After shaping to line, grade, and cross section, the subgrade shall be compacted to 95% of maximum dry density at a moisture content ranging from -2 to +3 percent relative to the optimum moisture content as determined by ASTM D698 Standard Proctor Test. Where this does not provide minimum compaction as specified, the subgrade shall be scarified and recompacted to those requirements. This operation shall include any reshaping and wetting or drying required to obtain proper compaction.

Any soft or unsuitable material, designated by the Engineer, shall be scarified to a minimum depth of six inches, moisture conditioned, and recompacted so that surface materials of the subgrade will be as compacted and well bonded with the first layer of the fill or embankment as specified for subsequent layers. This method is incidental and no direct payment will be made. If the Engineer agrees that this method will not be effective, the material shall be removed and replaced with suitable material as approved by the Engineer. Payment for this shall be at the contract unit price or if no price is in the contract, then payment shall be two times the excavation unit price plus one times the embankment unit price.

**204.5 Blasting.** No blasting shall be allowed unless otherwise approved by the Engineer.

**204.6 Payment.**

**A. Rock Excavation.** If rock is encountered, the Engineer shall be notified prior to excavation. Quantities shall be determined by field measurements made by the Engineer. A maximum overbreak of six inches will be allowed. Payment for such excavation shall be made at the contract price and shall include the cost of all

materials, labor, equipment, installation, relocation, and maintenance, and all else necessary to provide a complete and functional project as outlined on the Plans. If no pay item for Rock Excavation is included in the contract, it shall be considered incidental to the work and no direct payment will be made.

**B. Other Excavation.** Payment for Excavation (all excavation other than rock) shall be made at the contract price and shall include the cost of all materials, labor, equipment, installation, relocation, and maintenance, and all else necessary to provide a complete and functional project as outlined on the Plans. If no pay item for Excavation is included in the contract, it shall be considered incidental to the work and no direct payment will be made.

## SECTION 205 – EMBANKMENT

**205.1 Scope.** The work covered by this section consists of constructing fills and embankments according to the lines, grades, thicknesses, and cross sections shown on the Plans.

**205.2 Embankments.** To the maximum extent available, excess suitable material obtained from excavation shall be used for the construction of fills and embankments. When the amount of material excavated is not sufficient to construct the embankments shown on the Plans, the contractor shall supply the necessary material, from offsite sources, subject to approval of the Engineer and in accordance with applicable Federal, State and local regulations. All material placed in earth fills of the embankments shall be free from brush, stumps, logs, roots, debris, and organic or other deleterious materials. No frost or frozen material shall be incorporated in embankments.

**205.3 Preparation for Embankment.** Prior to placing fill material for embankment, the subgrade shall be proof-rolled with a loaded scraper or loaded tandem axle dump truck. Any soft or unsuitable material, designated by the Engineer, shall be scarified to a minimum depth of six inches, moisture conditioned, and recompacted so that surface materials of the subgrade will be as compacted and well bonded with the first layer of the fill or embankment as specified for subsequent layers. This method is incidental and no direct payment will be made. If the Engineer agrees that this method will not be effective, the material shall be removed and replaced with suitable material as approved by the Engineer. Payment for this work shall be at the contract unit price for Preparation for Embankment or if no price is in contract, payment will be based on two times the Excavation unit price plus one times the Embankment unit price.

**205.4 Placement and Compaction.** All earth fill and earth embankment materials shall be placed in approximate horizontal layers not to exceed eight inches in uncompacted thickness. Material deposited in piles or windrows by excavating and hauling equipment shall be spread and leveled before compaction.

Each layer of material for earth fill of embankments shall have the best practicable moisture content for satisfactory compaction. The material in each layer shall be wetted or dried as required and thoroughly mixed to ensure uniform moisture content and adequate compaction. Each layer shall be thoroughly compacted to 90% of maximum dry density at a moisture content ranging from -2 to +3 percent relative to the optimum

moisture content as determined by the ASTM D698 Standard Proctor Test; with the exception of the top eighteen inches, which should be to 95%. If the material fails to meet the density or moisture contents specified, compaction methods shall be altered.

Occasional rocks exceeding eight inches shall be disposed of into the embankment outside of the limits of the proposed travel lanes. The thickness of this layer may be increased if necessary in order to accommodate the rocks, but shall not exceed twelve inches in compacted thickness.

If the excavated material consists predominantly of rock, the embankment layer thickness may be the average size of the larger rock, but not exceeding 24 inches. Larger rocks shall be reduced in size to meet the above requirements or removed from the project limits and disposed of in accordance with Federal, State and local regulations. The rock fill shall be well graded so the voids between larger rocks are filled with smaller material. Each layer of rock fill shall be thoroughly compacted.

When embankment is to be placed on hillsides or when new embankment is to be constructed against existing embankments, the existing slopes that are steeper than 6:1 when measured at right angle to the roadway shall be continuously benched in not less than twelve inch rises over those areas where it is required as the work is brought up in layers. Benching shall be sufficient width to permit placing and compacting operation. Each horizontal cut shall begin at the intersection of the ground line and the vertical side of the previous bench. Existing slopes shall also be stepped to prevent any wedging action of the embankment against structures. No direct payment will be made for the material cut out or for its compaction along with the new embankment material.

Wherever a trench is to pass through a fill or embankment, the fill or embankment material shall be placed and compacted to an elevation not less than twelve inches above the top of pipe elevation before the trench is excavated.

**205.5 Drainage Maintenance.** If it is necessary in the prosecution of the work to interrupt or obstruct the natural drainage of the surface, or the flow of the artificial drainage, the contractor shall provide for the same during the progress of the work, in such manner that no damage will result to either public or private interests.

**205.6 Payment.** Payment for embankment shall be made at the contract unit price and shall include the cost of all materials, labor, equipment, installation, relocation, and maintenance, and all else necessary to provide a complete and functional project as outlined on the Plans and as specified in this section. If no pay item for embankment is included in the contract, it shall be considered incidental to the work and no direct payment will be made.

## SECTION 206 - TRENCH EXCAVATION AND BACKFILL

**206.1 Scope.** Trench excavation shall refer to any and all material excavated for installation of pipes, structures, or other items in accordance with the Plans; and shall include all subsequent handling and disposal of such material, together with the preparation of all subgrade. Also included in the work under this item shall be all sheeting, shoring,

bracing, protection of adjacent property, preparation of all subgrades, storage of excavated materials where necessary, backfilling, tamping, and grading. The removal or diversion of surface or seep (ground) water shall also be included under trench excavation. Tunneling/Boring may be permitted or required at the discretion of the Engineer.

**206.2 Classification of Excavated Materials.** Excavation shall be classified according to Section 204.2 of these Specifications.

**206.3 Existing Utilities.** Prior to excavation, the Contractor shall determine the location of existing underground structures and utilities. Contractor shall exercise care during excavation to avoid damage to existing structures and utilities. When obstructions that are not shown on the Plans are encountered during the progress of the work and those obstructions interfere so that alteration of the Plans is required, the Engineer will alter the Plans or order a deviation in line and/or grade or arrange for removal, relocation, or reconstruction of the obstructions. Where the work encounters above or below ground utilities, either mains or services, the Contractor shall contact the proper utility company so that their representative can be on hand to direct the excavation.

If the Contractor damages any utility, the repair to restore the utility to its original condition shall be done at his expense. The Contractor shall furnish temporary support, adequate protection, and maintenance of all underground and surface structures, drains, sewers, and other obstructions encountered. All properties that have been disturbed shall be restored as nearly as practical to their original condition.

**206.4 Removal of Improvements.** The Contractor shall remove improvements as specified in Section 203 of these Specifications.

**206.5 Lines and Grades.** Pipes and structures for sanitary sewer, storm sewer, and water mains shall be installed in accordance with the lines and grades indicated on the Plans and in accordance to Section 104.6 of these Specifications. Trenches shall not be opened in advance of the pipe being laid beyond what is necessary to expedite the work. The approval of the Engineer shall be obtained prior to opening more trench than the Contractor can place pipe in during that working day. At no time shall there be more than three hundred feet of trench opened in advance of the pipe laying operations and this length of open trench may be shortened by order of the Engineer. Trenches shall be excavated to a width that will provide adequate working space, but the maximum width of the trench at the top of the pipe shall not exceed the manufacturer's recommendation.

Trenches shall be excavated below the bottom of the pipe to provide space for the specified depth of pipe bedding shown on Standard Drawings. Trenches in ledge rock, compact rock, or gravelly soil, or other unyielding materials shall be excavated below the bottom of the pipe at least four inches. The space beneath the pipe shall be refilled with the specified bedding material. Bell holes shall be excavated at each joint to provide full-length barrel support of the pipe and to prevent point loading at the bells or couplings.

**206.6 Sheeting and Shoring.** The Contractor shall conduct all work in compliance with current Occupational Safety and Health Act (OSHA) standards. For any excavation, the

Contractor shall submit a Trench Safety Plan using the process described in Section 104.9 of these Specifications. In the event of any possible hazardous or unstable trenching conditions, suitable bracing or shoring may be required by the Engineer.

Sheeting, shoring, or bracing shall be placed by the Contractor wherever necessary to preserve any excavation, embankment, or structure. Where necessary, the sheeting shall be closely driven and to sufficient depth to protect workers and facilities. The Contractor shall be held responsible for the sufficiency of all sheeting and bracing used, and for all persons injured or property damaged as the result of improper quality, strength, placing, maintaining or removing the same. No extra compensation will be made for sheeting and bracing whether left in place or not, unless otherwise approved by the Engineer. The Contractor shall at his own expense shore up, protect and insure from injury, all buildings, retaining walls, piers and footings, storm sewers, sanitary sewers, utility lines, fences, curbs, trees or other property that could be damaged during construction. The Contractor shall be held responsible for all damage caused by the prosecution of the work.

Whenever a movable steel trench box is used in place of sheeting, care shall be taken to prevent the pipe from moving when the steel box is moved. The pipe shall be secured to prevent longitudinal movement.

**206.7 Dewatering.** The Contractor shall furnish and operate sufficient pumps and equipment and shall provide all materials, labor, etc., required to prevent interference with any work by water, ice, or snow. The Contractor shall correct at his expense damage of any kind resulting from insufficient pumping facilities or lack of proper conduct of the work. No structure or pipe shall be laid in water and water shall not be allowed to run into or over any concrete work or into or through any pipe, unless by written authorization of the Engineer. Discharge from any dewatering operation shall be conducted to natural drainage channels, storm sewers, or a reservoir as approved by the Engineer.

Removing water and surface water from the trench shall be the responsibility of the Contractor. Compensation for this work shall be considered incidental to the work and no direct payment will be made.

**206.8 Trench Stabilization.** When the bottom of the trench or the subgrade is found to be unstable or to include ashes, cinders, refuse, organic material, or other unsuitable material, such material shall be removed to a minimum of at least three (3) inches below the grade line or the depth directed by the Engineer and replaced under the directions of the Engineer with clean, stable backfill material. The bedding shall be consolidated and leveled so that the pipe may be installed.

When the bottom of the trench or the subgrade is found to consist of material that is unstable to such a degree that, in the judgment of the Engineer, it cannot be removed, a foundation for the pipe and appurtenances shall be constructed using piping, timber, concrete, or other materials at the direction of the Engineer. The expense for the installation of such a foundation, unless provided for on the Plans, shall not be considered a normal cost for pipe installation and could be paid for with a Change Order after approval by the Engineer.

**206.9 Pipe Bedding.** If rock is encountered within six inches of the bottom of the structure, the Contractor shall excavate a minimum of six inches below the bottom of structure and backfill with aggregate bedding material. Pipe Bedding materials and construction requirements shall be in accordance to Division 300 of these Specifications.

**206.10 Trench Backfill.** Trench Backfill materials shall be in accordance to one of the following:

**A. Earth Backfill.** All backfill material shall be free from refuse, vegetable or organic material, boulders, rocks or stones, frozen soil, or other material that, in the opinion of the Engineer, is unsuitable. No rock or stone having a dimension larger than nine inches shall be placed within three feet of the top of the pipe. Large stones may be placed in the remainder of the trench backfill if well separated and arranged so not to interfere with backfill compaction. Excavated material may be used for backfill if it meets the above stated specifications. If excavated material is not suitable, the Contractor shall supply the necessary material, from offsite sources, subject to approval of the Engineer and in accordance with applicable Federal, State and local regulations.

The maximum compacted thickness of any one layer shall not exceed six inches. The earth backfill shall be uniformly spread in successive layers of such depth that when compacted, the backfill will have the approximate thickness specified. The moisture content of the backfill material and the compactive effort applied to the backfill material shall be sufficient to produce a density of at least 95% of the optimum dry density, as determined by the ASTM D698 Standard Proctor Test.

**B. Aggregate Backfill.** See Division 300 of these Specifications. Aggregate backfill shall be used beneath streets, pavements, drives, curbs, walks, and other surface construction.

Trench Backfill: Trenches shall be backfilled immediately after the pipe is laid. No water shall be permitted to rise in trenches that have not been backfilled after the pipe is in place.

Backfill adjacent to Top of Pipe: The first one foot of backfill over the top of pipe shall be hand placed or as otherwise approved by Engineer.

Upon completion of specified hand fill, the balance of the trench shall be mechanically filled to at least three inches above the proposed finished grade of the surrounding terrain.

In open fields and areas where minor settlement will not result in damage to property or injury to persons, backfill material will not have to be compacted to maximum density. All sunken trenches in these areas shall be refilled, leaving the surface over the trenches slightly mounded (six to ten inches) and in a condition satisfactory to the Engineer. Streets, alleys, driveways, and Rights-of-Way shall be kept in passable condition by refilling shrunken trenches, laying temporary paving over trenches, provide steel plate bridging, etc. to the satisfaction of the Engineer.

Upon completion of backfill, appropriate Permanent Erosion Control, Seed and Mulch

shall be placed in accordance to Section 209 of these Specifications.

**206.11 Steel Plate Bridging (SPB).** Steel Plate Bridging may be allowed over an open Excavation within the pavement surface on a temporary basis only as authorized by the Engineer. Steel Plate Bridging shall be limited to thirty days, unless otherwise approved by the Engineer. Proper advanced warning signs shall be placed before the SPB. Embedded SPB are required during the winter months, except for concrete and brick paved streets where a rubber ramp is required. Winter month's placement is only allowed as authorized by the Engineer. The SPB shall be marked with the owner's name and telephone number. The Engineer has the authority to determine and approve all emergency applications of steel plates.

**206.12 Warranty.** The Contractor shall warranty his workmanship and materials against defects for one year after the date of completion and acceptance.

**206.13 Payment.** No direct payment shall be made for trench excavation and work described in this Section.

## SECTION 207 - FINAL GRADING

**207.1 Scope.** The work covered by this section consists of constructing final grade and placement of topsoil, according to the lines, grades, thicknesses, and cross sections shown on the Plans.

**207.2 Final Grading.** Slopes in both excavation and embankment shall be neatly dressed to the lines shown on the cross sections, unless other lines are approved by the Engineer. Use of graders or other power equipment will be permitted for final grading and dressing of slopes, provided the result is uniform and equivalent to hand work. All surfaces shall be graded to secure effective drainage. Unless otherwise indicated, a slope of at least one percent (1%) shall be provided.

**207.3 Placement of Topsoil.** All cuts, fills, embankments, and other areas which have been disturbed or damaged by construction operations shall be surfaced with topsoil to a depth of at least four inches. Topsoil shall be of a quality at least equal to the existing topsoil in adjacent areas, free from trash, stones, and debris, and well suited to support plant growth. Final grading and surfacing shall be smooth, even, and free from clods and stones larger than one inch in greatest dimension, weeds, brush, and other debris.

**207.4 Disposal of Excess Excavated Materials.** Material in excess of that needed to construct the embankments show on the Plans shall be the property of the contractor. The excess material and all debris, stones, logs, stumps, roots, and other unsuitable materials, shall be removed from the site and disposed of by the Contractor. Broken concrete and other debris resulting from pavement or sidewalk removal, excavated rock in excess of the amount permitted to be installed in trench backfill, debris encountered in excavation work, and other similar waste materials shall be disposed of by the Contractor in a satisfactory manner off of City Property subject to approval by the Engineer and in accordance with applicable Federal, State and local regulations.

**207.5 Payment.** No direct payment shall be made for final grading and all other work specified in this section.

## SECTION 208 – SUBGRADE

**208.1 Scope.** The work covered by this section consists of preparing the subgrade upon which a base is to be constructed.

**208.2 Compaction.** The subgrade shall be brought to a firm, unyielding surface All soft, spongy, or yielding spots, and all organic material shall be entirely removed and the space refilled with suitable material.

The subgrade shall be compacted to 95% of maximum dry density at a moisture content ranging from -2 to +3 percent relative to the optimum moisture content as determined by the ASTM D698 Standard Proctor Test. Where minimum compaction as specified is not achieved, the subgrade shall be scarified and recompacted to those requirements. This operation shall include any reshaping and wetting or drying required to obtain proper compaction. All soft or otherwise unsuitable material shall be removed and replaced with suitable material.

When the concrete pavement is to be constructed over an old roadbed composed of gravel or macadam, the old roadbed shall be entirely scarified and the material spread for the full width of the roadbed and rolled. All interstices shall be filled with fine material and rolled to make a dense, tight surface.

**208.3 Proof-rolling.** If determined necessary by the Engineer, the sub-grade shall be proof-rolled with a loaded scraper or loaded tandem axle dump truck. Any soft or unsuitable material detected by proof-rolling shall be removed and replaced with earth fill, placed and compacted as specified herein.

Any attempt to compact subgrade under forms set for pavement, curb, or curb and gutter, where subgrade is low, will not be permitted. The forms shall be removed and the subgrade corrected and compacted, and then the forms replaced to proper grade and alignment.

**208.4 Payment.** No direct payment shall be made for subgrade preparation and work described in this Section.

## SECTION 209 - SEED AND MULCH

**209.1 Scope.** The work covered by this section consists of furnishing all labor, equipment, and materials and performing all operations, in connection with establishing grass on areas disturbed by the Contractor's operations. Seeding will not be required in areas being used for the production of crops. When the site is inactive for fourteen days, the Contractor shall seed and straw in order to establish temporary or permanent cover.

**209.2 Materials.**

**A. Fertilizer.** Fertilizer shall be pelleted, granulated, or approved equal and shall free flowing and shall have an analysis of available nitrogen, phosphorus, and potassium of 12-12-12. The Fertilizer shall be applied at a rate of 600 pounds per acre.

**B. Seed.** Missouri Certified seed, tested and tagged, shall be used in accordance Missouri Seed Improvement Association. Seed shall be furnished in sealed, standard containers. Seed that is wet or moldy or that has been otherwise damaged in transport or storage will not be acceptable. Seed mixtures shall conform to the following, except as otherwise noted on the Plans.

1. **Lawn Area Seed Mix.** Seed shall be a blend of 90%) turf type fescue mixed with 10% perennial ryegrass applied at a rate of eight pounds per one thousand square feet. Turf type fescue cultivars shall be equal parts of three of the following varieties: Tempo, Falcon, Olympic, Rebel, Rebel II, Bonanza, Adventure, Mustang, Arid, Apache, Jaguar, Wrangler, and Cimaron. The 10% perennial ryegrass shall be one of the following varieties: Citation II, Palmer, Fiesta, Manhattan II, Ranger, Prelude, Diplomat, Pennant, or Blazer.
2. **Field Area Seed Mix.** Seed shall be a blend of 80% Kentucky 31 tall fescue mixed with 10% annual ryegrass and 10% perennial ryegrass applied at a rate of 120 pounds per acre.

**C. Sod.** Certified turf-grass sod conforming to the American Sod Producers Association specifications for machine-cut thickness, size, strength, moisture content, and mowed height shall be used. Sod shall be of uniform density, color, and texture and shall be free of weeds and undesirable native grasses. Unless another species is specified on the Plans, sod shall be a turf type fescue cultivar blend with a minimum of three of the following varieties: Tempo, Falcon, Olympic, Rebel, Rebel II, Bonanza, Adventure, and Mustang.

**D. Mulch.** Mulch for application to seed areas shall be straw baled, dry, unweathered, and shall show no signs of discoloration and mold damage. Material containing excessive amounts of weed or crop seeds will not be acceptable. Mulch shall be applied at a rate of not less than fifty standard bales per acre.

**E. Erosion Control Blankets.** Biodegradable wood excelsior, straw, or coconut-fiber mat enclosed in a photodegradable plastic mesh shall be installed according to the manufacturer's recommendations at locations shown on the Plans.

**209.3 Soil Preparation.** Contractor shall limit soil preparation to areas that will be planted in the immediate future. Areas to be prepared shall have the soil loosed to a minimum depth of four inches. For lawn areas, stones larger than one and one half (1½) inches shall be removed. For field areas, stones larger that four inches shall be removed. Areas shall be graded to a smooth, even surface with loose, uniformly fine texture. Soil shall be rolled and raked to remove ridges and fill depressions to meet finish grades. Trash, debris, and other objects that may interfere with planting or maintenance operations shall be removed.

**209.4 Seeding.** Seed shall be sowed with a spreader or seeding machine at the rates specified and during a time of year recommended by the manufacturer. Seed shall be evenly distributed by sowing equal quantities in two directions at right angles to each other. Seed in lawn areas shall be raked slightly into the top one-eighth inch of topsoil, rolled lightly, and watered.

**209.5 Mulching.** Mulch shall be spread uniformly in a continuous blanket according to the specified rates. Mulch shall be spread by hand, blower, or other suitable equipment.

**209.6 Sod.** All sod used shall be the same type as removed or damaged, shall be best quality, and, when placed, shall be live fresh growing grass with at least one and one half inches of soil adhering to the roots. All sod shall be procured from areas where soil is fertile and contains a high percentage of loamy topsoil and from areas that have been grazed or mowed sufficiently to form a dense turf.

Sod shall be transplanted within twenty-four hours from the time it is harvested, unless stacked at its destination in a suitable manner. All sod in stacks shall be kept moist and protected from exposure to the sun and from freezing. In no event shall more than one week elapse between cutting and planting.

Before placing sod, all shaping and dressing of the areas shall have been completed. After shaping and dressing, fertilizer, as specified, shall be applied uniformly in the manner and amounts recommended by the manufacturer, and harrowed lightly. Sod shall follow immediately. The laying of sod shall only occur during the period from March 15 to October 1, unless written permission is given by the Engineer to extend the planting season.

**209.7 Hydro-seeding.** All slopes greater than a 3:1 slope shall be hydroseeded. The contractor shall select and submit appropriate hydroseeding mixture after an evaluation of site conditions is performed with respect to: soil conditions, site topography, season and climate, vegetation types, maintenance requirements, sensitive adjacent areas, water availability, and the plan for permanent vegetation. When seed or fertilizer is applied with a hydraulic seeder, the rate of application shall be not less than one thousand gallons of slurry per acre. When using a hydraulic seeder, the fertilizer nutrients and seed shall be applied in two separate operations. Follow-up applications shall be made as needed to cover weak spots. All seeded areas shall be inspected for failures and re-seeded, fertilized, and mulched within the planting season, using not less than half the original application rates. After any rainfall event, the Contractor shall be responsible for maintaining all slopes to prevent erosion.

**209.8 Maintenance.** Contractor shall maintain all areas until final acceptance of the project. Maintenance shall include but not limited to repair of erosion damage, reseeding, maintenance of mulch, mowing, and watering. At the end of the maintenance period, a healthy, uniform, close stand of grass has been established, free of weeds and surface irregularities, with coverage exceeding 90% over any ten square foot area and bare spots not exceeding five inches by five inches.

**209.9 Warranty.** The Contractor shall warranty his workmanship and materials against defects for one year after the date of completion and acceptance.

**209.10 Payment.** Payment for seed and mulch shall be made at the contract unit price and shall include the cost of all materials, labor, equipment, installation, relocation, and maintenance, and all else necessary to provide a complete and functional project as outlined on the Plans and as specified in this Section. If no pay item for seed and mulch

is included in the contract, it shall be considered incidental to the work and no direct payment will be made. All disturbed areas outside of authorized construction limits shall be seeded at the contractor's expense.

# DIVISION 300- AGGREGATES

## SECTION 301 – AGGREGATE- BEDDING

**301.1 Scope.** The work covered by this section consists of furnishing all labor, equipment, and materials and performing all operations, in connection with placing bedding under associated pipes, junction boxes, inlets, catch basins, etc. as specified according to the lines, grades, and type, as shown on the Plans.

**301.2 Materials.** All bedding shall be sand or crushed stone aggregate (95% passing a ½" screen, but no more than 10% passing a #200 sieve) and free from debris, organic matter, and stones larger than one inch in its greatest dimension, and shall be compacted into place.

**301.3 Placement.** All bedding shall be a minimum of four inches in depth. The bedding shall surround the bottom one half of the pipe. The bedding shall be uniformly spread in successive layers of such depth that the bedding will have the approximate thickness as specified on the Plans.

**301.4 Payment.** There will be no direct payment made for Aggregate Bedding, it shall be considered incidental to the work.

## SECTION 302 – AGGREGATE- TRENCH BACKFILL

**302.1 Scope.** The work covered by this section consists of furnishing all labor, equipment, and materials and performing all operations, in connection with placing aggregate backfill on and around piping, junctions boxes, inlets, catch basins, etc. that are located beneath streets, pavements, future pavements, drives, curbs, walks, and other surface construction as specified according to the lines, grades, and type shown on the Plans.

**302.2 Materials.** Type 5 aggregate for aggregate trench backfill shall conform to the *Missouri Standard Specifications for Highway Construction,* latest edition and meet the following sieve analysis:

| Sieve | Percent by Weight (Mass) |
|---|---|
| Passing 1-inch | 100 |
| Passing ½-inch | 60 – 90 |
| Passing No. 4 | 35 – 60 |
| Passing No. 30 | 10 – 35 |
| Passing No. 22 | 0 – 15 |

**302.3 Placement.** All backfill shall cover the top half of the pipe and up to subgrade. The maximum compacted thickness of any one layer shall not exceed six inches. The aggregate base shall be uniformly spread in successive layers of such depth that when compacted, the base will have the approximate thickness specified on the Plans.

**302.4 Compaction.** The aggregate shall be compacted to the ASTM D698 Standard Proctor Test maximum dry density.

**302.5 Payment.** There will be no direct payment made for Aggregate Backfill, it shall be considered incidental to the work.

## SECTION 303- AGGREGATE BASE COURSE

**303.1 Scope.** The work covered by this section consists of furnishing all labor, equipment, and materials and performing all operations, in connection with placing one or more courses of aggregate on a prepared subgrade according to the lines, grades, and thicknesses, and typical cross sections shown on the Plans. The minimum compacted thickness shall be four inches, unless otherwise specified.

**303.2 Materials.** Type 5 aggregate for base shall conform to the *Missouri Standard Specifications for Highway Construction*, latest edition and meet the following sieve analysis:

| Sieve | Percent by Weight (Mass) |
|---|---|
| Passing 1-inch | 100 |
| Passing ½-inch | 60 – 90 |
| Passing No. 4 | 35 – 60 |
| Passing No. 30 | 10 – 35 |
| Passing No. 22 | 0 – 15 |

**303.3 Prep-work.** The areas to receive aggregate base course shall be prepared according to Section 208.

**303.4 Placement.** The maximum compacted thickness of any one layer shall not exceed six inches. The aggregate base shall be uniformly spread in successive layers of such depth that when compacted, the base will have the approximate thickness specified on the plans.

**303.5 Compaction.** The aggregate shall be compacted to the ASTM D698 Standard Proctor Test maximum dry density.

**303.6 Payment.** Payment for aggregate base shall be made at the contract price and shall include the cost of all materials, labor, equipment, installation, relocation, and maintenance, and all else necessary to provide a complete and functional project as outlined on the Plans and as specified in this Section. If no pay item for aggregate base is included in the contract, the aggregate base and work specified in this Section shall be considered incidental to the work and no direct payment will be made.

## SECTION 304 – ROCK DITCH LINER

**304.1 Scope.** The work covered by this section consists of furnishing all labor, equipment, and materials and performing all operations, in connection with placing rock ditch liner according to the lines, grades, and type, as shown on the Plans.

**304.2 Materials.**

**A. Rock Ditch Liners.** Shall conform to the *Missouri Standard Specifications for Highway Construction,* latest edition. Individual rock fragments shall be dense, sound, and resistant to abrasion and shall be free from cracks, seams, and other defects. The rock for riprap shall be obtained from any quarry supplying material certified by MoDOT or the U.S. Army Corps of Engineers.

1. **Type 1 Rock Ditch Liner** shall consist of material with a predominant rock size of two inches, a maximum rock size of six inches and a gradation such that no more than 15 % will be less than one inch.
2. **Type 2 Rock Ditch Liner** shall consist of material with a predominant rock size of 6 inches, a maximum rock size of 10 inches and a gradation such that no more than 15 percent will be less than three inches.
3. **Type 3 Rock Ditch Liner** shall consist of material with a predominant rock size of twelve inches, a maximum rock size of twenty inches and a gradation such that no more than 15 % will be less than four inches.
4. **Type 4 Rock Ditch Liner** shall consist of material with a predominant rock size of nineteen inches, a maximum rock size of twenty-eight inches and a gradation such that no more than 15% will be less than six inches.

**B. Geotextile Fabric.** Shall conform to the *Missouri Standard Specifications for Highway Construction,* latest edition.

**C. Bedding Material.** Bedding material shall be used under Type 3 and Type 4 Rock Ditch Liner. Bedding material shall consist of crushed stone with a gradation consisting of 100% passing the 3-inch sieve, 30-70% passing the 1½ inch sieve and 0 to 15% passing the No. 4 sieve.

**304.3 Placement.** The Rock Ditch Liner shall be placed to the approximate shape and thickness as shown on the Plans for the specified ditch or as directed by the Engineer. The rock shall be placed on the subgrade or on geotextile fabric as shown on the Plans.

**304.4 Payment.** Payment for Rock Ditch Liner shall be made at the contract price and shall include the cost of all materials, labor, equipment, installation, relocation, and maintenance, and all else necessary to provide a complete and functional project as outlined on the Plans and specified in this section. If no pay item for Rock Ditch Liner is included in the contract, it shall be considered incidental to the work and no direct payment will be made.

## SECTION 305 – ROCK BLANKET

**305.1 Scope.** The work covered by this section consists of furnishing all labor, equipment, and materials and performing all operations, in connection with placing a protective blanket of rock or broken concrete on slopes or stream banks according to the lines, grades, and type, as shown on the Plans.

**305.2 Materials.** Shall conform to the *Missouri Standard Specifications for Highway Construction,* latest edition. Rock Blanket shall be durable stone or broken concrete containing a combined total of no more than 10% of soil, sand, shale or non-durable rock. The material shall contain a large percentage of pieces as large as the thickness of the blanket will permit, with enough smaller pieces to fill the larger voids. Acceptance of

quality and size of material will be made by visual inspection at the job site.

**A. Type 1 Rock Blanket** at least 40%of the mass shall be of pieces having a volume of one cubic foot or more.

**B. Type 2 Rock Blanket** at least 60% of the mass shall be of pieces having a volume of one cubic foot or more

**305.3 Prep-work.** The areas to receive Rock Blanket of any type shall be dressed smooth to the slopes or shapes called for on the Plans and shall be free from stumps, organic matter, or waste material. A toe trench shall be provided to key the bottom course of the Rock Blanket. The trench, if not shown on Plans, shall be two feet in depth. All material, regardless of the type or kind, shall be placed reasonably close to the lines and depths called for on the Plans.

**305.4 Placement.** The Rock Blanket shall be placed to ensure uniform distribution of the larger rock fragments with the smaller fragments filling the voids. The Rock Blanket may be mechanically placed in such a manner to ensure a well-keyed, densely placed, uniform layers of rip rap at the specified nominal thickness.

**305.5 Payment.** Payment for Rock Blanket shall be made at the contract price and shall include the cost of all materials, labor, equipment, installation, relocation, and maintenance, and all else necessary to provide a complete and functional project as outlined on the Plans and as specified in this section. If no pay item for Rock Blanket is included in the contract, it shall be considered incidental to the work and no direct payment will be made.

## SECTION 306 – GABIONS

**306.1 Scope.** The work covered by this section consists of furnishing all labor, equipment, and materials and performing all operations, in connection with placing a welded wire fabric gabions or twisted hexagonal mesh gabions and revet mattresses at locations according to the lines, grades, and type, as shown on the Plans.

**306.2 Materials.** Shall conform to the *Missouri Standard Specifications for Highway Construction,* latest edition. The Gabion baskets or mattresses shall be made of welded wire fabric or twisted hexagonal mesh. Aggregate used in the Gabions or mattresses shall be crushed limestone with a maximum and minimum size according to the basket manufacturer's recommendations.

**306.3 Placement.** The Gabion baskets or mattresses shall be placed according to the basket manufacturer's recommendations.

**306.4 Payment.** Payment for Gabions shall be made at the contract price for type and size and shall include the cost of all materials, labor, equipment, installation, relocation, and maintenance, and all else necessary to provide a complete and functional project as outlined on the Plans and as specified in this Section. If no pay item for Gabions is included in the contract, it shall be considered incidental to the work and no direct payment will be made.

## SECTION 307 – TEMPORARY ROCK DITCH/INLET CHECKS

**307.1 Scope.** The work covered by this section consists of furnishing all labor, equipment, and materials and performing all operations, including maintaining, in connection with placing a temporary rock ditch and inlet checks according to the lines, grades, and type, as shown on the Plans.

**307.2 Materials.** Shall conform to the *Missouri Standard Specifications for Highway Construction,* latest edition. Rock Ditch checks shall be constructed with clean rock. A minimum of 50% of the rock shall have a diameter of six inches or greater, with a maximum size of nine inches. Silt fence or an equivalent filter fabric shall be placed beneath the rock ditch check.

**307.3 Maintenance.** The contractor shall replace checks as directed by the Engineer. Periodic sediment removal shall include removal and disposal of sediment by the Contractor, off of City property, to a location where sediment will not erode into construction areas, streams, or other bodies of water and subject to approval of the Engineer, and in accordance with applicable Federal, State and local regulations. The contractor shall inspect work site and maintain as specified in Section 201 of these Specifications.

**307.4 Payment.** Payment for Temporary Rock Ditch/Inlet Check shall be made at the contract price and shall include the cost of all materials, labor, equipment, installation, relocation, and maintenance, and all else necessary to provide a complete and functional project as outlined on the Plans and as specified in this Section. If no pay item for Temporary Rock Ditch/Inlet Check is included in the contract, it shall be considered incidental to the work and no direct payment will be made.

## SECTION 308 – FLOWABLE FILL

**308.1 Scope.** The work covered by this section consists of furnishing all labor, equipment, and materials and performing all operations, in connection with placing Flowable Fill as specified on the Plans or otherwise permitted for compacted backfill and other cavity filling uses.

**308.2 Materials.** Shall conform to the *Missouri Standard Specifications for Highway Construction,* latest edition. The contractor shall submit to the Engineer a mix design with the proportions and source of material, admixtures, dry cubic yard batch weights and actual 28-day compressive test results. The 28-day compressive strength of the mixture shall exceed 50 psi and have a maximum compressive strength of 300 psi.

Commercial mixes may be used, provided the specified strengths are obtained. If approved for use, the material shall be placed in accordance with the manufacturer's recommendations, which shall be furnished to the Engineer.

**308.3 Placement.** If Flowable Fill is placed in more than one layer, the base layer shall be roughened and free of all loose materials, prior to placement of the next layer. If the material does not harden to the required strength, the fill shall be removed and replaced

with an acceptable material at the contractor's expense.

**308.4 Payment.** Payment for Flowable Fill shall be made at the contract price and shall include the cost of all materials, labor, equipment, installation, relocation, and maintenance, and all else necessary to provide a complete and functional project as outlined on the Plans and as specified in this Section. If no pay item for Flowable Fill is included in the contract, it shall be considered incidental to the work and no direct payment will be made.

# DIVISION 400- FLEXIBLE PAVEMENT

## SECTION 401 - MATERIALS

**401.1 Scope.** Provide plant-mixed, hot-laid asphalt-aggregate mixture conforming to the *Missouri Standard Specifications for Highway Construction,* latest edition. Use locally available materials and gradations, which exhibit a satisfactory record of previous installations. Material certificates signed by material producer and Contractor must be submitted, certifying that each material item complies with or exceeds specified requirements.

**401.2 Bituminous Surface Course.** (BP-2) Shall conform to the *Missouri Standard Specifications for Highway Construction,* latest edition.

**401.3 Bituminous Leveling Course.** (BP-1 or BP-2 as indicated on the Plans.) Shall conform to the *Missouri Standard Specifications for Highway Construction,* latest edition.

**401.4 Bituminous Base Course.** Shall conform to the *Missouri Standard Specifications for Highway Construction,* latest edition.

**401.5 Tack Coat.** Shall conform to the *Missouri Standard Specifications for Highway Construction,* latest edition.

## SECTION 402 – ASPHALT CONSTRUCTION REQUIREMENTS

**402.1 Scope.** This section covers construction of flexible pavement of the thickness and width shown on the Plans. Specifications include all materials, construction requirements, and other appurtenant work. See the Standard Drawings for minimum thickness requirements.

**402.1 Weather Limitations.** Bituminous mixtures shall not be placed (1) when either the air temperature or the temperature of the surface on which the mixture is to be placed is below 35 degrees F and falling, (2) on any wet or frozen surface, or (3) when weather conditions prevent the proper handling or finishing of the mixture.

**402.2 Milling.** The limits of milling shall be designated in the field by the Engineer. Millings are to be disposed by the Contractor, off of City property, subject to approval of the Engineer, and in accordance with applicable Federal, State and local regulations. Where the new asphaltic pavement is to join existing overlay or pavement, overlapping or sloping will not be permitted, but the old asphalt shall be milled out for a square cut joint. Where it joins existing concrete pavement, the asphalt shall be thickened by tapering down to the full thickness of the concrete in the last ten feet or as determined by the Engineer. In areas where the milling is against the curb, care shall be taken to remove all asphalt against the concrete. At butt-joints, temporary suitable material shall be placed and maintained against the existing pavement prior to placement of the asphalt.

**402.3 Manhole and Valve Guard Adjustments.** When it is necessary to adjust a manhole or valve guard to match the grade of the improved street, the Contractor shall use appropriate adjusting ring for the field condition, as shown in the APL.

**402.4 Surface Preparation.** The area to receive flexible pavement shall be prepared according to Section 208. Paving work shall not begin until deficient base course areas have been corrected to the satisfaction of the Engineer and are ready to receive paving.

**402.5 Tack Coat.** Apply to contact surfaces of previously constructed asphalt or Portland cement concrete and surfaces abutting or projecting into asphaltic concrete pavement. Distribute at rate of 0.02 to 0.10 gallons per square yard of surface as directed by the Engineer. Allow to dry as per manufacturer's recommendation before paving.

**402.6 Leveling Course.** A leveling course consisting of a layer of variable thickness shall be spread to the desired grade and cross section to eliminate irregularities in the existing surface. Spot-leveling operations over small areas, with featheredging at high points and ends of spot areas, may be required prior to placing the leveling course. Rigid control of the placement thickness of the leveling course will be required. The mixture shall be practically free from segregation. Leveling course will be required unless otherwise specified by the Engineer.

**402.7 Placing Asphalt.** Asphaltic concrete mixture shall be placed on prepared surface, spread, and strike off at minimum temperature of 225°F. Each course shall be placed to the required, cross-section, and compacted thickness shown on the Plans. Asphalt pavers shall place mixture in strips not less than ten feet wide, unless otherwise acceptable to Engineer. After the first strip has been placed and rolled, succeeding strips shall be placed and rolling extended to overlap previous strips. Areas inaccessible to equipment shall be placed by hand.

Contractor shall exercise care in applying bituminous materials to avoid smearing of adjoining concrete surfaces. Damaged surfaces shall be cleaned or removed at the direction of the Engineer.

See Standard Drawings for minimum thickness requirements.

**402.8 Joints.** Contact surfaces between old and new pavements, or between successive days' work, shall be cleaned and tack coat applied to ensure continuous bond between adjoining work. Joints shall be constructed to have same texture, density, and smoothness as other sections of asphaltic concrete pavement.

**402.9 Rolling.** Rolling shall begin when mixture will bear roller weight without excessive displacement. Mixture shall be compacted with hot hand tampers or vibrating plate compactors in areas inaccessible to rollers.

**A. Breakdown Rolling.** Breakdown or initial rolling shall be accomplished by immediately following rolling of joints and outside edge. Surfaces shall be checked after breakdown rolling and displaced areas repaired by loosening and filing, if required, with hot material.

**B. Second Rolling.** Second rolling shall follow as soon as possible, while mixture is hot, and continue until mixture has been thoroughly compacted.

**C. Finish Rolling.** Finish rolling shall be performed while mixture is still warm enough for removal of roller marks and continue until roller marks are eliminated and course has attained maximum density.

**402.10 Shoulder Treatment.** After the overlay has been placed, the shoulders shall be restored. Where applicable, the material along the edges shall be pulled in and then compacted with a vibratory roller.

**402.11 Opening to Traffic.** Asphalt pavement shall not be opened to vehicular traffic or contractor's equipment until the pavement has cooled to a minimum of 150 degrees Fahrenheit and hardened. Contractor shall erect proper traffic control to protect pavement from traffic until mixture has cooled enough not to become marked. The barricades used shall be standard devices per the MUTCD and of such size and weight that they are not readily movable by hand, and must be visible at night. Pavement shall be clean prior to opening to traffic.

## SECTION 403 - FIELD QUALITY CONTROL

**403.1 Scope.** Asphaltic concrete courses shall be tested in-place for compliance regarding thickness and surface smoothness. Unacceptable pavement shall be repaired or removed and replaced as directed by the Engineer.

**403.2 Thickness.** In-place compacted thickness will not be acceptable if exceeding the following allowable variations:
**A. Surface Course:** Plus or minus one quarter (1/4) inch
**B. Base Course:** Plus or minus one quarter (1/4) inch

**403.3 Surface Smoothness.** Finished surfaces of each asphaltic concrete course shall be tested for smoothness using ten foot straightedge applied parallel to centerline of paved area. Surfaces will not be acceptable if exceeding the following tolerances for smoothness:
**A. Wearing Course Surface:** three-sixteenth (3/16) inch
**B. Crowned Surfaces:** one quarter (1/4) inch

**403.4 Density.** The Engineer may randomly test locations. The final, in-place density of the mixture shall be 94% +/- 2% of the theoretical maximum specific gravity for all mixtures.

## SECTION 404 –PAYMENT

**404.1 Bituminous Surface Course.** Payment for Bituminous Surface Course shall be made at the contract price and shall include the cost of all materials, labor, equipment, installation, relocation, and maintenance, and all else necessary to provide a complete and functional project as outlined on the Plans and specified in these Specifications. If no pay item for Bituminous Surface Course is included in the contract, it shall be considered incidental to the work and no direct payment will be made.

**404.2 Bituminous Leveling Course.** Payment for Bituminous Leveling Course shall be made at the contract price and shall include the cost of all materials, labor, equipment, installation, relocation, and maintenance, and all else necessary to provide a complete and functional project as outlined on the Plans and specified in these Specifications. If no pay item for Bituminous Leveling Course is included in the contract, it shall be considered incidental to the work and no direct payment will be made.

**404.3 Bituminous Base Course.** Payment for Bituminous Base Course shall be made at the contract price and shall include the cost of all materials, labor, equipment, installation, relocation, and maintenance, and all else necessary to provide a complete and functional project as outlined on the Plans and specified in these Specifications. If no pay item for Bituminous Base Course is included in the contract, it shall be considered incidental to the work and no direct payment will be made.

**404.4 Tack Coat.** Payment for Tack Coat shall be made at the contract price and shall include the cost of all materials, labor, equipment, installation, relocation, and maintenance, and all else necessary to provide a complete and functional project as outlined on the Plans and specified in of these Specifications. If no pay item for Tack Coat is included in the contract, it shall be considered incidental to the work and no direct payment will be made.

**404.5 Milling.** Payment for Milling shall be made at the contract price and shall include the cost of all materials, labor, equipment, installation, relocation, and maintenance, and all else necessary to provide a complete and functional project as outlined on the Plans and specified in of these Specifications. If no pay item for Milling is included in the contract, it shall be considered incidental to the work and no direct payment will be made.

**404.6 Manhole and Valve Guard Adjustments.** Payment for Manhole and Valve Guard Adjustments shall be made at the contract price and shall include the cost of all materials, labor, equipment, installation, relocation, and maintenance, and all else necessary to provide a complete and functional project as outlined on the Plans and specified in of these Specifications. If no pay item for Manhole and Valve Guard Adjustments is included in the contract, it shall be considered incidental to the work and no direct payment will be made.

**404.7 Shoulder Treatment.** Payment for Shoulder Treatment shall be made at the contract price and shall include the cost of all materials, labor, equipment, installation, relocation, and maintenance, and all else necessary to provide a complete and functional project as outlined on the Plans and specified in of these Specifications. If no pay item for Shoulder Treatment is included in the contract, it shall be considered incidental to the work and no direct payment will be made.

# DIVISION 500 - PORTLAND CEMENT CONCRETE PAVEMENT (PCCP)

## SECTION 501 – MATERIALS

**501.1 Scope.** Provide plant-mixed cement mixture conforming to the *Missouri Standard Specifications for Highway Construction,* latest edition. Use locally available materials and gradations, which exhibit a satisfactory record of previous installations. Material certificates signed by material producer and Contractor must be submitted, certifying that each material item complies with or exceeds specified requirements.

**501.2 Cement.** Shall conform to the *Missouri Standard Specifications for Highway Construction,* latest edition.

**501.3 Coarse Aggregate.** Shall conform to the *Missouri Standard Specifications for Highway Construction,* latest edition.

**501.4 Fine Aggregate.** Shall conform to the *Missouri Standard Specifications for Highway Construction,* latest edition.

**501.5 Air-Entraining Admixtures.** Shall conform to the *Missouri Standard Specifications for Highway Construction,* latest edition.

**501.6 Water.** Water approved by the Missouri Department of Natural Resources for drinking purposes shall be acceptable.

**501.7 Fly Ash.** Shall conform to the *Missouri Standard Specifications for Highway Construction,* latest edition.

**501.8 Dowel Bars.** Shall conform to the *Missouri Standard Specifications for Highway Construction,* latest edition.

**501.9 Tie Bars.** Shall conform to the *Missouri Standard Specifications for Highway Construction,* latest edition.

**501.10 Epoxy Coated Reinforcing Steel.** Shall conform to the *Missouri Standard Specifications for Highway Construction,* latest edition.

**501.11 Steel Welded Wire Fabric.** Shall conform to the *Missouri Standard Specifications for Highway Construction,* latest edition.

**501.12 Liquid Curing Compound.** Shall conform to the *Missouri Standard Specifications for Highway Construction,* latest edition.

**501.13 Joint Material.** Shall conform to the *Missouri Standard Specifications for Highway Construction,* latest edition.

**501.14 Preformed Fiber Expansion Joint Filler.** Shall conform to the *Missouri Standard Specifications for Highway Construction,* latest edition.

## SECTION 502 - MIX DESIGN

**502.1 Scope.** Concrete mix design for pavement shall conform to the Concrete Section of the *Missouri Standard Specifications for Highway Construction,* latest edition; except as modified or amended by these Specifications. No fly ash shall be allowed unless approved by the Engineer. Other mix designs may be approved by the Engineer.

**A. Concrete Mix.** Design Strength shall be 4,000 PSI. Mix shall contain a minimum of 6.35 bag cement. Mix shall obtain a maximum of three inch slump.

| Materials | cu. yds. lbs. |
|---|---|
| Cement | 597 |
| Rock | 1879 |
| Sand | 1128 |
| Water | 31.8 gal |
| Air Entrainment | 6% +/- 1.5% by volume |

**B. High Early Concrete Mix.** Design Strength shall be 3,000 PSI within three days. Mix shall contain a minimum of 8.62 bag cement. Mix shall obtain a maximum of three inch slump.

| Materials | cu. yds. lbs. |
|---|---|
| Cement | 810 |
| Rock | 1714 |
| Sand | 1052 |
| Water | 34.5 gal |
| Air Entrainment | 6% +/- 1.5% by volume |

## SECTION 503 – BATCHING

**503.1 Mixing.** Concrete for pavement shall be mixed according to the Concrete Section of the *Missouri Standard Specifications for Highway Construction,* latest edition; except as modified or amended by these Specifications.

**503.2 Retempering.** Retempering of mortar or concrete that has partially hardened; that is, remixing with or without additional materials or water, shall not be permitted.

**503.3 Delivery Tickets.** In addition to the requirements of the Concrete Section of the *Missouri Standard Specifications for Highway Construction,* latest edition, each delivery ticket supplied by the concrete manufacturer shall show the weights and/or volumes of the ingredients in the load.

## SECTION 504 - CONSTRUCTION REQUIREMENTS

**504.1 Scope.** This Section covers construction of Portland Cement Concrete Pavement (PCCP) of the thickness and width shown on the Plans. Specifications include materials, construction requirements, and other appurtenant work. See Standard Drawings for minimum thickness and joint detail.

**504.2 Weather Conditions.** Concrete shall not be placed on frozen subgrade. All concrete shall be effectively protected from freezing until a minimum compressive strength of 3,500 psi has been attained. The contractor shall provide a method, meeting the approval from the Engineer, of monitoring the concrete that demonstrates that the concrete has been protected from freezing. Regardless of precautions taken, the contractor shall assume all risks, and all frozen concrete shall be replaced at the contractor's expense.

To protect against rain, the contractor shall have on location at all times material for the protection of the edges and surface of the unhardened concrete. The contractor shall protect the concrete from damage due to rain. Failure to properly protect unhardened concrete may constitute cause for the removal and replacement of defective concrete at the contractor's expense.

**504.3 Surface Preparation.** The area to receive pavement shall be prepared according to Section 208. Paving work shall not begin until deficient base course areas have been corrected to the satisfaction of the Engineer and are ready to receive paving.

**504.4 Forms.** Prior to start of paving, forms shall be in place to accommodate at least one day of paving. The form height shall equal the pavement thickness shown on the Plans. Where combined curb and gutter exists or are constructed as part of the improvement these shall be used as the side forms for the concrete slab. Where there are no gutters, the line and grade of the slab shall be governed by a line of forms set along each side of the pavement. Where a longitudinal construction joint is required, an additional form will be necessary. Forms shall be rigidly staked to the exact line and grade to provide an accurate track for the screed. Steel forms are preferred. If wooden forms are used, they shall not be less than two inch stock and shall be straight and free from warp. All forms shall be cleaned and oiled before being used. The forms shall be left in place until the concrete is adequately dry.

A slipform machine may be used only as approved by the Engineer. The concrete slump shall be adjusted to meet the type of work being performed.

**504.5 Contraction Joints.** Contraction joints are necessary to control natural cracking from stresses caused by concrete shrinkage, thermal contraction, and moisture or thermal gradients within the concrete. All joints in the pavement not made by forms, or tools shall be sawed. Such joints shall be cut by means of an approved concrete saw to the depth and width as shown on the Standard Drawings. The saw shall be equipped with a suitable guide, properly adjusted so there will be no side sway, and the joint shall be cut in a straight line. During the sawing, the blade shall be used in accordance with the manufacturer's recommendations.

Sawing of the joints shall begin as soon as the concrete has hardened sufficiently to permit sawing without excessive raveling, usually four to twenty-four hours. All joints shall be sawed before uncontrolled shrinkage cracking takes place. The sawing of any joint shall be omitted if a crack occurs at or near the joint location prior to the time of sawing. Sawing shall be discontinued when a crack develops ahead of the saw. Following the sawing, the joints shall be thoroughly cleaned and sealed with specified filler.

Transverse joints shall be at fifteen foot intervals measured along the centerline. Transverse slab width between longitudinal joints shall be a minimum of $7^1/_2$ feet and a maximum of thirteen feet. Contraction joints may be skewed with the centerline, upon approval of the Engineer. Maximum skew shall be five feet for thirty feet of joint length. Skew shall be in direction of traffic flow.

Tie bars shall be supported in the proper position by chairs driven into the aggregate base, or may be placed by approved methods prior to the consolidation of the concrete. Tie bars shall be free from dirt, oil, paint and grease. Tie bars required at longitudinal construction joints shall be positioned before concrete base or pavement consolidation.

**504.6 Construction Joints.** Construction joints shall be reinforced as shown on the Standard Drawings. Transverse construction joints are necessary at the end of a paving segment or at a placement interruption for a driveway, cross road or bridge, as shown on the Standard Drawings. Longitudinal construction joints join lanes that are paved at different times, or join through-lanes to curb and gutter or auxiliary lanes. No keyed joints shall be allowed.

**504.7 Isolation Joint.** Isolation joints separate the pavement from objects or structures, and allow independent movement of the pavement, object or structure without any connection that could cause damage. Isolation joints are used where a pavement abuts certain manholes, drainage fixtures, sidewalks and buildings, and intersects other pavements or bridges. Isolation joints shall be constructed at the locations and according to the details shown on the Standard Drawings.

**504.8 Placing Concrete.** Prior to placing the concrete, the subgrade and aggregate base course shall be prepared as described in Section 208 and Section 303. Concrete trucks will not be allowed to drive on a subbase prepared for a pour, unless otherwise directed by the Engineer.

The concrete shall be deposited upon the moistened aggregate base course to the required depth and for the entire width between forms in such a manner to prevent segregation and to minimize handling. Concrete shall be placed in successive batches and in a continuous operation without the use of intermediate forms or bulkheads between expansion joints.

Where the grade is greater than 6%, the concrete shall be placed and finished proceeding uphill unless written approval for an alternate procedure is obtained from the Engineer.

**504.9 Concrete Curb and Gutter.** Concrete curb and gutter shall be constructed in accordance to the Drawings. Joints in concrete curb and gutter shall be a continuation of

the joints in the adjacent PCCP. Expansion joints adjacent to drainage castings may be placed as a continuation of other joint types. When constructed adjacent to flexible pavement, transverse joints in concrete curb and gutter shall be constructed to the details shown in the Plans. When concrete curb and gutter is constructed adjacent to flexible pavement, two 5/8-inch diameter, eighteen inch long reinforcing bars shall be installed in all transverse joints.

**504.10 Finishing.** Machine finishing by extrusion methods or by vibrating and screeding processes shall be required for all concrete. After the final course of the concrete has been placed, the concrete shall be struck-off and thoroughly vibrated until concrete of a uniform and satisfactory density is attained. The surface of the pavement shall be of uniform texture and to the proper grade and typical section.

Vibrating tubes shall extend into the concrete the distance necessary to provide adequate consolidation. Vibrators shall be operated only when the machine to which the vibrators are attached is moving. Care shall be taken that the vibrator does not penetrate the aggregate base or dislodge or move the joints. Vibrators shall not come in contact with the reinforcement, load transfer devices, aggregate base or side forms. Vibrators are to be used for consolidation; they shall not be used to move concrete.

Moisture in any form shall not be applied to the surface of the concrete except for emergency conditions. When emergency conditions exist and it becomes necessary to apply additional moisture to the surface of the concrete in order to complete the final finishing operation, water may only be applied in the form of a fine pressure spray. Under such conditions, placement of additional concrete on the aggregate base shall be discontinued until the emergency conditions cease.

Compacting, vibrating and finishing concrete by hand methods will be permitted:

**A.** For all curves having a form line radius of less than 200 feet or where wood forms are used.
**B.** For all irregularly shaped areas.
**C.** For pavement lanes less than 200 feet long.
**D.** For pavement lanes less than 10 feet wide.
**E.** For bridge approaches and pavement to first expansion joint.
**F.** When a breakdown of the mechanical compacting and finishing equipment occurs or in the event of some other emergency. After a breakdown, only material which has already been proportioned and which may be rendered unsatisfactory for use may be finished by hand.
**G.** For all Portland cement concrete base.

Pavement next to the forms shall be smoothed with a trowel and the edges of the pavement rounded with a suitable edging tool of approximately 3/8 inch. A well-defined and continuous radius having a smooth dense finish shall be produced.

After surface irregularities have been removed the surface shall be given a broom finish. Brooms shall be drawn across the surface from centerline to side with broom perpendicular to surface overlapping previous stroke. Brooming shall be done so that corrugations will be uniform but not over 1/16 inch in depth. All brooming shall meet

the approval of the Engineer.

Surface tolerance of the pavement shall be 1/4 inch in ten feet on residential streets and 1/8 inch in ten feet on collector and arterial streets when checked longitudinally with a ten foot straight edge. When the finished surface does not meet these requirements it shall be corrected even to the extent of repeating the entire floating and belting operations.

**504.11 Curing.** Immediately after the finishing operations have been completed, the concrete surface shall be treated by one of the following methods. After the pavement forms are removed, the edges of the slab must also be cured.

**A. Liquid Curing Compound.** Material shall be ASTM C309 Standard Specification for Liquid Membrane-Forming Compounds for Curing Concrete, Type 2. Where liquid curing compound is used it shall be placed after the concrete has been finished and the free water has left the surface. The entire area of the pavement surface shall be sealed by spraying a uniform application of the curing solution.

The contractor shall provide satisfactory equipment and means to properly control and assure the direct application of the curing solution on the pavement surface so as to result in a uniform coverage on the pavement at the rate of one gallon for each 150 square feet of area.

If rain falls on the newly coated pavement before the film has dried sufficiently to resist damage, or if the film is damaged in any other way, the contractor shall apply additional curing material. All areas cut by finishing tools subsequent to the application of the curing solution shall immediately be given new applications at the rate specified above.

If hairline cracking develops before the membrane can be applied, the concrete shall be initially cured with wet burlap before the membrane is placed.

**B. Burlap.** The top surface of the concrete shall be temporarily covered with thoroughly damp burlap after the concrete has set sufficiently to prevent marring of the surface. Burlap shall be handled in such a manner that contact with earth or other deleterious substances is avoided. All burlap, except burlap previously used for curing concrete, shall be thoroughly washed. The burlap shall be kept thoroughly wet until removed for application of the final curing material. Neither the top nor the edge of the concrete shall be left unprotected for more than thirty minutes. When the burlap is removed, liquid curing compound shall be applied as described above.

**504.12 Removing Forms.** Forms shall be removed carefully to avoid damage to the concrete base or pavement. Honeycombed areas not rejected shall be immediately repaired. If the forms are removed less than seventy-two hours after placing concrete, the sides of the concrete shall be cured by one of the methods specified above. Any trench excavated beside the forms shall be entirely backfilled so water will not stand next to the concrete base or pavement.

**504.13 Sealing Joints.** All sawed contraction joints and sawed or formed expansion joints shall be sealed with joint sealing material before the pavement is opened to any traffic.

Immediately prior to sealing joints, joints shall be thoroughly cleaned and dried. The sealing material shall be heated and applied per the manufacturers recommendations. If manufacturer's recommendations are not followed, material will be rejected. The material shall fill the joint openings uniformly from the bottom to 1/2 inch from the top. Excess joint material shall be removed from the pavement surface.

**504.14 Opening to Traffic.** Concrete pavement shall not be opened to traffic or to the contractor's equipment until the concrete has obtained a minimum compressive strength of 3,500 pounds per square inch, or such length of time as may be specified or directed by the Engineer.

The contractor shall maintain adequate barricades and protection of the pavement to prevent traffic from using the pavement until appropriate strength is achieved. The barricades used shall be standard devices per the MUTCD and of such size and weight that they are not readily movable by hand, and must be visible at night. Pavement shall be cleaned prior to opening to traffic.

## SECTION 505 – PAYMENT

**505.1 Payment.**

**A. Portland Cement Concrete Pavement.** Payment for PCCP shall be made at the contract price and shall include the cost of all materials, labor, equipment, installation, relocation, and maintenance, and all else necessary to provide a complete and functional project as outlined on the Plans and specified in Division 500 of these Specifications. If curb and gutter is integral, the price shall be included with PCCP. If no pay item for PCCP is included in the contract, it shall be considered incidental to the work and no direct payment will be made.

**B. Curb and Gutter.** Payment for Curb and Gutter shall be made at the contract price and shall include the cost of all materials, labor, equipment, installation, relocation, and maintenance, and all else necessary to provide a complete and functional project as outlined on the Plans and specified in Division 500 of these Specifications. All curb shall be measured along the flow line. If no pay item for Curb and Gutter is included in the contract, it shall be considered incidental to the work and no direct payment will be made.

# DIVISION 600 - PAVEMENT REPAIR

## SECTION 601 – MATERIALS

**601.1 Scope.** The work shall consist of furnishing all labor, materials, and equipment for a complete pavement repair for Asphaltic Concrete Streets or Portland Cement Concrete (PCCP). Pavement repair shall be constructed in conformance with the lines and grades shown on the Plans or as established by the Engineer and as specified herein. Item of work or materials not specifically mentioned, but necessary for the completion of pavement repair shall be considered as incidental to other items in the contract.

**601.2 Earthwork.** Shall conform to Division 200 of the City of Cape Girardeau Specifications.

**601.3 Asphaltic Concrete Pavement.** Shall conform to Division 400 of the City of Cape Girardeau Specifications.

**601.4 Portland Cement Concrete Pavement.** Shall conform to Division 500 of the City of Cape Girardeau Specifications.

## SECTION 602- FLEXIBLE PAVEMENT REPAIR

**602.1 Scope.** Flexible Pavement Repair shall be constructed according to the Standard Drawings and in conformance with the lines and grades shown on the Plans.

**602.2 Cut Requirements.** Flexible Pavement shall be cut a minimum of three feet outside each side of the trench excavation area, as shown on the Standard Drawings. Area shall be cut with a saw, perpendicular to the cross sectional area. The cut shall be a minimum of ten inches in depth. Removal of foreign materials and defective areas shall meet the approval of the Engineer. No angle cuts shall be allowed. Steel Plate Bridging may be authorized as stated in Section 206 of these Specifications.

**602.3 Fill Requirements.** If applicable, appropriately backfill trench as specified in Trench Backfill Section 206 of these Specifications up to the subgrade elevation. Top backfill with a minimum of eight inches of compacted Type 5 Aggregate Base as specified in Section 303. Lay new Flexible Pavement to match existing thickness plus one inch or a minimum of four inches as specified in Section 400 of these Specifications. The first lift may be BP-2 or BP-1. The top lift shall be BP-2. Compaction of flexible pavement shall meet density requirements as stated in Section 400 of these Specifications.

If hot mix is not available due to weather limitations, cold patch may be accepted on a temporary basis. It is the permit holder's responsibility to maintain the cold patch until it is replaced. As soon as the appropriate mix is available, the cold patch shall be removed and the appropriate Bituminous Surface Course shall be placed.

## SECTION 603- PORTLAND CEMENT CONCRETE PAVEMENT REPAIR

**603.1 Scope.** Portland Cement Concrete Pavement (PCCP) Repair shall be constructed according to the Standard Drawings to match surrounding pavement grades or per the lines and grades shown on the Plans.

**603.2 Cut Requirements.** Portland Cement Concrete Pavement shall be cut a minimum of three feet outside of the trench excavation on all sides of the excavation. If this cut is within two feet of a joint, replacement shall be taken to the joint. Area shall be cut with a saw, perpendicular to the cross sectional area. The cut shall be a minimum of ten inches in depth. Removal of foreign materials and defective areas shall meet the approval of the Engineer. No angle cuts shall be allowed. Steel Plate Bridging may be authorized as stated in Section 206 of these Specifications.

**603.3 Fill Requirements.** If applicable, appropriately backfill trench as specified in Trench Backfill Section 206 of these Specifications up to the subgrade elevation. Top backfill with a minimum of four inches of compacted Type 5 Aggregate Base as specified in Section 303. Lay new PCCP to match existing thickness plus one inch or a minimum of seven inches as specified in Section 500 of these Specifications. Concrete shall be doweled into existing pavement as shown on the Standard Drawings.

## SECTION 604 - PAYMENT

**604.1 Payment.**

**A. Flexible Pavement Repair.** Payment for Flexible Pavement Repair shall be made at the contract price and shall include the cost of all materials, labor, equipment, installation, relocation, and maintenance, and all else necessary to provide a complete and functional project as outlined on the Plans and specified in Division 600 of these Specifications. If no pay item for Flexible Pavement Repair is included in the contract, it shall be considered incidental to the work and no direct payment will be made.

**B. Portland Cement Concrete Pavement (PCCP) Repair.** Payment for PCCP Repair shall be made at the contract price and shall include the cost of all materials, labor, equipment, installation, relocation, and maintenance, and all else necessary to provide a complete and functional project as outlined on the Plans and specified in Division 600 of these Specifications. If no pay item for PCCP Repair is included in the contract, it shall be considered incidental to the work and no direct payment will be made.

# DIVISION 700 - DRIVEWAYS AND SIDEWALKS

## SECTION 701 – DRIVEWAYS

**701.1 Scope.** This section covers construction of driveways of the thickness and width shown on the Plans. Specifications include all materials, construction requirements, and other appurtenant work. Driveways shall be constructed according to the material type, line, grade, and dimensions shown on the Plans, or as directed by the Engineer.

**701.2 Driveway Design.** All Driveways shall be concrete and shall be constructed in accordance with the Drawings. The minimum thickness of a driveway on Rights-of-Way shall be six inches. Curbs are not allowed on Rights-of-Way for drive entrances unless otherwise approved by the Engineer. The drive shall have a maximum slope toward the curb or street of 1/4 inch per foot for commercial and industrial drives and 1/2 inch per foot for residential drives, or otherwise approved by the Engineer.

All driveways shall include a sidewalk crossing whether or not a sidewalk connection is made. The crossing surface shall be constructed in accordance with the applicable ADA, ADAAG and ABA requirements. See Section 702.4 of these Specifications.

**701.3 Materials.** All materials used in the construction of driveways within the Rights-of-Way shall be made of concrete and shall conform to Division 500 of the Standard Specifications.

**701.4 Driveway Joints.**

**A. Location of contraction joints** shall be provided by the contractor and subject to the Engineer's approval.

**B. Isolation joints** of three-quarter (3/4) inch preformed fiber expansion joint filler, as stated in Section 501.14 of these Specifications, full depth, shall be provided between the driveway slab and street, and also at the Right-of-Way line as shown on the Standard Drawings.

Street Creep may occur with thermal expansion and contraction of concrete pavements. Concrete expands and contracts due to temperature changes. Homes located at the end of "T" intersections, at the end of cul-de-sacs, and on the outside of a curve are especially susceptible to street creep damage. In areas prone to street creep, driveways are required to have a four inch expansion joint at back of curb, a one inch expansion joint at the back of sidewalk or near the Right-of-Way line, and a two inch joint adjacent to the garage floor.

## SECTION 702 - CONCRETE SIDEWALKS

**702.1 Scope.** This section covers construction of sidewalks of the thickness and width shown on the Plans. Specifications include all materials, construction requirements, and other appurtenant work. All sidewalks shall be concrete and shall be constructed to the line, grade and dimensions shown on Plans, or as directed by the Engineer.

**702.2 Sidewalk Design.** Minimum widths of new sidewalks shall be four feet in residential areas and six feet in commercial areas. The minimum thickness of a sidewalk shall be four inches. Where the sidewalk is used as a part of a driveway and at street corners, it shall be a minimum thickness of six inches. The walk shall have a slope toward the curb or street of no more than 2%. When constructing sidewalks, the contractor shall leave a minimum three inch sleeve in all areas where signs or mailboxes are posted or to be posted throughout the project. Aggregate base shall be a minimum of four inches thick and shall extend six inches on both sides of the sidewalk.

Where replacing an existing sidewalk, the contractor shall construct the new sidewalk to the width, grade, and line of the old sidewalk, or as otherwise directed by the Engineer. Where excavation through an existing sidewalk is necessary, the contractor shall remove and replace to the nearest joint.

**702.3 Materials.** All materials used in the construction of concrete sidewalks shall conform to Division 500 of the Standard Specifications. There shall be no sidewalks constructed of asphaltic concrete pavement.

**702.4 ADA Ramps and Truncated Domes.** Ramps shall be constructed at locations shown in the Plans. All ramps shall conform to the requirements of ADA, ADAAG, and ABA. The maximum slope of all ramps shall be 1:12. The surface texture of the entire ramp area (ramp, flares, landing) shall be obtained by a course brooming transverse to the slope of the ramp.

Detectable warnings shall be installed for all curb ramps. The requirement does NOT apply at residential driveways and other locations where the sidewalk transitions to drive locations unless a "curb ramp" is shown and called for on the Plans. The detectable warnings shall extend the full width of the ramp. The detectable warnings shall start at a distance of six to eight inches back from the bottom of the ramp at the gutter line and extend a minimum of two feet in the direction of the ramp. The detectable warnings shall be the color red or natural rust for concrete ramps. Installation of the ramps shall conform to the manufacturer's recommendations. See APL for product information.

**702.5 Warranty.** The contractor shall warranty his workmanship and materials against defects for one year after the date of completion and acceptance. If the contractor fails to remedy such defects within ten days after the written notice to do so, the City has the right to repair the same or cause the same to be repaired and charge the cost of the same against this warranty.

**702.6 Sidewalk Joints.**

**A. Contraction joints** shall be cut ¾ inch in depth, with a suitable tooling device, and on five foot intervals for the full width of the sidewalk. Sawing of the joints will be permitted as an alternate. All joints shall be vertical and straight.

**B. Isolation joints** of ½ inch preformed fiber joint filler shall be provided every fifty feet and shall be used between the sidewalk and curbing and around other obstructions, unless otherwise shown on the Plans.

## SECTION 703 – PAYMENT

**703.1 Payment.**

**A. Concrete Driveway.** Payment for Concrete Driveway shall be made at the contract price and shall include the cost of all materials, labor, equipment, installation, relocation, and maintenance, and all else necessary to provide a complete and functional project as outlined on the Plans and specified in Division 700 of these Specifications. If no pay item for Concrete Driveway is included in the contract, it shall be considered incidental to the work and no direct payment will be made.

**B. Concrete Sidewalk.** Payment for Concrete Sidewalk shall be made at the contract price and shall include the cost of all materials, labor, equipment, installation, relocation, and maintenance, and all else necessary to provide a complete and functional project as outlined on the Plans and specified in Division 700 of these Specifications. If no pay item for Concrete Sidewalk is included in the contract, it shall be considered incidental to the work and no direct payment will be made.

**C. Curb Ramps:** Payment for Curb Ramps shall be made at the unit price and shall include cost of all materials, labor, equipment, installation, relocation, adjustments and maintenance, and all else necessary to provide a complete and functional project as outlined on the Plans and specified in this Section. If no pay item for Curb Ramp is included in the contract, it shall be considered incidental to the work and no direct payment will be made.

# DIVISION 800 - MISCELLANEOUS STREET CONSTRUCTION

## SECTION 801 – TEMPORARY TRAFFIC CONTROL

**801.1 Scope.** This section governs furnishing all equipment, materials and incidental parts as required to complete the Temporary Traffic Control as shown in the Plans.

**801.2 Submittals.** The Contractor shall submit a temporary traffic control plan and schedule to the Engineer prior to beginning work. See Section 104.9 of these Specifications for submittal procedures and requirements. The Temporary Traffic Control Plan shall include construction sequencing and phasing of lane closures. The Contractor shall maintain all vehicular and pedestrian traffic control devices and operations throughout the project at his expense. Prior to starting a construction phase, the Contractor shall secure approval from the Engineer for the proposed plan for operation, sequence of work, and methods of providing for the safe passage of traffic. If the City provides a temporary traffic control plan to the Contractor as part of the Contract Documents, any changes or deviations from the plan shall be approved by the Engineer.

**801.3 Standard.** The Contractor shall provide adequate temporary traffic control devices, such as, temporary concrete barriers, temporary striping, portable barriers, signs, changeable message boards, drums and cones, etc., in accordance the Manual on Uniform Traffic Control Devices (MUTCD), latest edition. Devices shall also meet MoDOT's Quality Standard for Temporary Traffic Control Devices.

**801.4 Flagger Control.** It is the flagger's responsibility to assess the safety and efficiency of traffic operations within the temporary traffic control zone and manage the movement of traffic through the proper assignment of right-of-way and/or by controlling speed. Each flagger shall maintain a valid flagger certification card that certifies the individual has been trained in the principal of flagging in accordance with the latest edition of MUTCD. Certifications will not be required in emergency situations that arise due to actions beyond the contractor's control when flagging is necessary to maintain safe traffic control on a temporary basis. All flagging operations shall be in accordance with the latest edition of MUTCD.

**801.5 Coordination and Scheduling.** Street closure shall be limited to one lane closure at a time, unless otherwise approved by the Engineer. Parallel streets adjacent to each other shall not be worked on simultaneously unless approved by the Engineer. Provision for local traffic shall be made by the Contractor, at his expense at all times during construction.

**801.6 Notice.** All residents along affected route shall be notified prior to the construction. Temporary access to driveways shall be provided. Contractor shall keep the Engineer informed of any changes regarding scheduling. Notice of lane closures shall be submitted at least two full City business days in advance to the Engineer, in order to allow appropriate amount of time for a press release.

**801.7 Execution.** The safety of the public and the convenience of traffic shall be regarded as primary importance at all times during construction. It shall be the entire responsibility

of the Contractor to provide for traffic along and across public roads as well as for ingress and egress to all private property. The Contractor shall plan and execute his operations in a manner that will cause minimum interference with traffic.

**801.8 Payment.** Payment for Temporary Traffic Control shall be made at the unit price and shall include the cost of all materials, labor, equipment, installation, relocation, and maintenance, and all else necessary to provide a complete and functional project as outlined on the Plans and specified in this Section. If no pay item for Temporary Traffic Control is included in the contract, it shall be considered incidental to the work and no direct payment will be made.

## SECTION 802 - TRAFFIC SIGNALS

**802.1 Scope.** This section governs furnishing all equipment, materials and incidental parts as required to complete the Traffic Signal Installation as shown in the Plans. Unless otherwise noted in the Plans, all equipment, materials and incidental parts shall be new. All incidental parts which are needed to properly install the system, but not shown on the Plans or described in these specifications, shall be furnished, the cost of which shall be included in the traffic signal installations contract price.

The traffic signal installation shall be complete, and the Contractor shall furnish and install all equipment necessary for the satisfactory operation of all electrical apparatus and for the complete operation of the traffic signal installation whether specifically mentioned or not.

**802.2 Materials.** All materials, including but not limited to concrete, reinforcing steel, hardware, etc., shall conform to the *Missouri Standard Specifications for Highway Construction,* latest edition.

**802.3 Products.** All products shall conform to the *Missouri Standard Specifications for Highway Construction,* latest edition and the City of Cape Girardeau's Approved Product List.

**802.4 Signal Heads.** Shall conform to the *Missouri Standard Specifications for Highway Construction,* latest edition; with the exception that only polycarbonate signal heads shall be used, and all signal indications in conventional signal heads shall be illuminated with LED modules.

**802.5 Signs.** All permanent traffic signing and traffic control signing shall conform to the requirements of the Manual on Uniform Traffic Control Devices (MUTCD), latest edition. All signs shall meet Section 804 of these Specifications.

**802.6 Post and Mast Arms.** Shall conform to the *Missouri Standard Specifications for Highway Construction,* latest edition.

**802.7 Span Wire Assemblies.** No span wire assemblies shall be allowed unless authorized by the Engineer.

**802.8 Power Supply Assemblies.** Shall conform to the *Missouri Standard Specifications for Highway Construction,* latest edition.

**802.9 Luminaire Control.** Shall conform to the *Missouri Standard Specifications for Highway Construction,* latest edition.

**802.10 Traffic Controller Assemblies.** Shall be NEMA TS1 and conform to the *Missouri Standard Specifications for Highway Construction,* latest edition.

**802.11 Interconnect Type.** The interconnect type shall be shown on the Plans and conform to the *Missouri Standard Specifications for Highway Construction,* latest edition.

**802.12 Detectors.** Video detectors shall be used, and shall conform to the *Missouri Standard Specifications for Highway Construction,* latest edition.

**802.13 Pull and Junction Boxes.** Shall conform to the *Missouri Standard Specifications for Highway Construction,* latest edition.

**802.14 Bases.** Shall conform to the *Missouri Standard Specifications for Highway Construction,* latest edition.

**802.15 Conduit Systems.** Shall conform to the *Missouri Standard Specifications for Highway Construction,* latest edition; with the exception that only polyvinyl chloride (PVC) schedule 40 or high-density polyethylene (HDPE) conduit shall be used.

**802.16 Signal Faces.** Shall conform to the *Missouri Standard Specifications for Highway Construction,* latest edition.

**802.17 Post Erection.** Shall conform to the *Missouri Standard Specifications for Highway Construction,* latest edition.

**802.18 Wiring.** Shall conform to the *Missouri Standard Specifications for Highway Construction,* latest edition.

**802.19 Test Equipment.** Shall conform to the *Missouri Standard Specifications for Highway Construction,* latest edition.

**802.20 Test Period.** Shall conform to the *Missouri Standard Specifications for Highway Construction,* latest edition.

**802.21 Turn-On.** The signal turn-on shall be supervised by the Engineer and City of Cape Girardeau Public Works personnel. The Contractor shall be present for signal turn-on and be prepared to respond to any technical difficulties that may be encountered due to construction of the traffic signal installation or defective equipment supplied for the traffic signal installation. The signal turn-on shall not be done on Fridays, holidays, or weekends and shall be completed between the hours of 9:00 a.m. and 2:00 p.m., unless otherwise noted in the Plans or directed by the Engineer.

**802.22 Maintenance Information.** Shall conform to the *Missouri Standard Specifications for Highway Construction,* latest edition.

**802.23 Final Clean Up.** Shall conform to the *Missouri Standard Specifications for Highway Construction,* latest edition.

**802.24 Un-Interruptible Power Supply:**

**A. Quality Assurance.** Where not specified otherwise, Work shall conform to the *Missouri Standard Specifications for Highway Construction,* latest edition.

**B. Uninterruptible Power Supply (UPS) – Operation.** The UPS shall be a line-interactive type and provide voltage regulation and power conditioning when using utility power. The UPS shall provide reliable emergency power to the traffic signals in event of a power failure or interruption. The transfer from utility power to battery power, and visa versa, shall not interfere with the normal operation of the traffic controller, conflict monitor or any other peripheral devices within the traffic controller assembly.

**C. Uninterruptible Power Supply (UPS) – Input Specifications.**

- The UPS shall have a nominal input voltage of 120VAC.
- The UPS shall have an input voltage range of 85 to 175VAC.
- The UPS shall have two input voltage boost modes.
- Boost-1 shall increase the input voltage from 94 to 115VAC.
- Boost-2 shall increase the input voltage from 85 to 101VAC.
- The UPS shall have two input voltage buck modes.

- Buck-1 shall decrease the input voltage from 154 to 124VAC.
- Buck-2 shall decrease the input voltage from 175 to 142VAC.
- The UPS shall have a user configurable power quality (PQ) option with default values of:
- High line disqualify shall be 130VAC.
- High line qualify shall be 128VAC.
- Low line qualify shall be 105VAC.
- Low line disqualify shall be 100VAC.
- The UPS input current shall be less than 16A with nominal line voltage, full load on the output and charger set at 10A.
- The UPS shall have 50/60Hz automatic frequency detection.
- The UPS shall have built-in class A EMI filter and transient suppression.

**D. Uninterruptible Power Supply (UPS) – Output Specifications**

- The output voltage of the UPS shall be 120VAC ±10% in line mode.
- The output voltage of the UPS shall be 120VAC ± 6% in backup mode.
- The output frequency of the UPS shall be 60Hz ± 5% in line mode.
- The output frequency of the UPS shall be 60Hz ± 5% in backup mode.
- The output waveform of the UPS shall be sinusoidal.
- The output voltage total harmonic distortion (THD) shall be less than 3% with a resistive load.
- The efficiency of the UPS at nominal line voltage shall be greater than 98%.
- The efficiency of the UPS in backup mode shall be greater that 84%.

- The step-load response of the UPS shall be full recovery in ½-cycle @ 50% change with a resistive load.
- The transfer time of the UPS line to backup and backup to line shall be 5ms typical.
- The line qualification time of the UPS shall be user selectable at 3, 10, 20, 30, 40 and 50sec.
- The line qualification time of the UPS default shall be three seconds.

**E. Uninterruptible Power Supply (UPS) - Battery and Charger Specifications**

- The nominal battery voltage of the UPS shall be 48VDC.
- The battery charger current of the UPS shall be user programmable for 3, 6 and 10A.
- The battery charger current default setting for the UPS shall be 6A.
- The battery charger in the UPS shall turn OFF when the battery temperature is 50°C.
- The UPS shall have a user programmable temperature compensated battery charger with setting for -2.5, -4, -5 and -6 mV/°C/Cell.
- The UPS shall have a temperature compensated battery charger with a default setting of -5mV/°C/Cell.
- The UPS shall have a battery charger with a float voltage of 56VDC maximum.
- The UPS shall have a user configurable low battery warning.
- The UPS shall have a default low battery warning set at 47VDC to indicate 40% remaining battery capacity.
- The UPS shall have a low battery shutdown set for 42VDC (10.5VDC per battery).

**F. Uninterruptible Power Supply (UPS) – Protection Specifications**

- The UPS shall have a 250VAC @ 20A input circuit breaker.
- The UPS shall have a 50A battery circuit breaker.
- The UPS shall have electronic short circuit protection when operating in backup mode.
- The UPS shall indicate an overload warning with a flashing alarm LED when the load is between 95% and 105% of the rated output for the UPS.
- The UPS shall shutdown in two minutes when operating in backup mode when the load is between 106% and 115% of the rated output for the UPS, and the fault LED shall turn ON. The fault LED shall clear when the overload is removed and the utility line power returns.
- The UPS shall shutdown in one minute when operating in backup mode when the load is greater than 115% and the fault LED shall turn ON. The fault LED shall clear when the overload is removed and the utility line power returns.
- The UPS shall disable the backup mode function when operating in line mode if the load exceeds 115% of the rated output for the UPS. The alarm shall be reset when the overload condition is removed.
- The UPS shall display an alarm LED if the battery ambient temperature is greater than 75°C and disable the backup mode function. The alarm shall clear when the battery ambient temperature is less than 70°C.
- The UPS shall display a fault LED when operating in backup mode and shutdown the inverter if the internal temperature is greater than 110°C. The fault shall clear

when the utility power returns and the internal temperature is less than 90°C.

- The UPS shall have output over-voltage protection to electronically shutdown the UPS if the output voltage exceeds 132VAC.
- The UPS shall disable the battery charger in two seconds and display an alarm LED if the battery voltage exceeds 59VDC. The alarm shall be cleared and charge enabled when the battery voltage drops to less than 57VDC.
- The UPS shall limit the charger voltage to 52VDC in the event the battery probe is not installed.
- The UPS shall have a battery circuit breaker with reverse polarity protection. The battery circuit breaker shall trip in the event the battery polarity is wired incorrectly.
- The UPS shall have protection for electrical backfeed to the utility that meets UL 1778 and CSA C22.2 No. 107.1.3 requirements.
- The UPS shall have user selectable settings that are password protected.
- The UPS shall be cooled by a variable speed fan that is microprocessor and PWM controlled. The fan shall be OFF when the ambient temperature is less that 40°C.
- The UPS shall display an alarm LED to indicate the fan is enabled but not turning.
- The UPS shall have a fan that is field replaceable.

**G. Uninterruptible Power Supply (UPS) - Displays, Controls and Diagnostics**

- The UPS shall have a two line/20-characters LCD display and control panel that can be rotated for easy user interface.
- The UPS shall have event and alarm logging with time/date stamping for up to 100 historical events.
- The UPS shall have six independently programmable control relays for control and report functions.
- The UPS shall have two independently programmable timers 0 to 8hr with two times-of-day restrictions on each timer.
- The UPS shall be equipped with a RS-232 port, which can be connected to a laptop.
- The UPS shall support an optional SNMP Ethernet card.

**H. Uninterruptible Power Supply (UPS) – Programmable Dry Contacts**

- The UPS shall have six sets of normally open (NO) and normally closed (NC) single pole double-throw (SPDT) dry contact relays rated for 250VAC @1A.
- The UPS shall have five sets of dry contact relays that are user programmable, C1 through C5, and one relay contact that is factory configured, C6.
- The UPS shall have dry contact relays that are user programmable via either the RS-232 or (optional) Ethernet communication ports to activate under the following conditions:
- ON BATTERY. The relay is energized whenever the UPS switches to battery power.
- LOW BATTERY. The relay is energized when the battery has reached a user defined low battery level of remaining useful capacity. This alarm is latched when a qualified line returns or the inverter shuts down. The default setting is 47VDC (~40%) of remaining useful battery capacity.
- TIMER 1. The relay is energized after being in backup mode for a given amount of time. This timer is adjustable from 0 to 8hr. The default setting is two hours.

- ALARM. The relay is activated after a specific or general alarm is detected. The alarm conditions include: line frequency, low output voltage, no temperature probe, overload, unconnected batteries, high temperature (>55°C) and low temperature (<-20°C).
- FAULT. The relay is activated after a specific or general fault is detected. These faults include: short circuit, low battery voltage (<41VDC), high battery voltage (> 59VDC), overload and over temperature (>75°C).
- OFF. The relay is disabled and will not activate under any condition.
- TIMER 2. Same as TIMER 1.
- TIMER 3. Same as TIMER 1.
- AC/DC FAN CONTROL. The relay is activated when the battery ambient temperature is greater than 35°C or at a user programmable threshold from 25 to 55°C @ 5°C increments.
- The UPS shall has a default dry contact relay configuration of:
- C1 ON BATT
- C2 LOW BATT
- C3 LOW BATT
- C4 TIMER
- C5 ALARM
- C6 48VDC

**I. Uninterruptible Power Supply (UPS) – Mechanical**

- The dimensions of the UPS shall be 5.22"H x 15.50"W x 8.75"D.
- The weight of the UPS shall be 35lbs.
- The color of the UPS shall be black.
- The UPS shall be shelf mount or rack mountable, either the horizontally or vertically.
- The UPS shall have an optional wall mount kit.
- The UPS shall have AC input and AC output terminal blocks mounted on the front panel. The terminal blocks shall be Weco p/n 324-HDS/03 or equivalent.
- The UPS shall have six user programmable dry contact relay terminal blocks on the front panel. The terminal blocks shall be JITE p/n PTB750B-03-1-03-3 or equivalent.
- The UPS shall have one user input and one Automatic Transfer Switch (ATS) terminal block on the front panel. The terminal blocks shall be JITE p/n PTB750B-03-1-03-3 or equivalent.
- The UPS shall have a DE-9 RS-232 connector on the front panel.
- The UPS shall have an optional RJ45 Ethernet connector on the front panel.
- The UPS shall have a battery connector on the front panel. The battery connector shall be an Anderson p/n SB50 or equivalent.
- The UPS shall have a RJ14 battery temperature probe connector on the front panel.

**J. Uninterruptible Power Supply (UPS) – Environmental**

- The operating temperature range of the UPS shall be -40° to 55°C with the capability of operating @ 800W for up to 2hr at 74°C ambient.
- The storage temperature range of the UPS shall be -40° to 75°C.
- The operating and storage humidity (non-condensing) range of the UPS is up to

95% RH.

- The altitude operating range of the UPS is up to 12,000ft with a de-rating of 2°C per 1000ft above 4500ft.
- The UPS shall be shipped in materials designed to meet requirements for ISTA program.

**K. Uninterruptible Power Supply (UPS) – Regulatory Requirements**

- The UPS shall pass electrical safety standards UL1778, CSA 22.2 No. 107.3, EN50091-1-1-2 and EN60950.
- The UPS shall pass emission standards FCC Subpart J Level A for conducted and radiated EMI CISPR22, EN55022 Level A for conducted and radiated EMI.
- The UPS shall pass Immunity standards:
- EN61000-4-2: ESD (Electrostatic discharge).
- EN61000-4-3: Radiated immunity.
- EN61000-4-4: EFT (Electrical fast transient).
- EN61000-4-5: Surge.
- EN61000-4-6: Conducted (Power and signal lines).
- EN61000-4-8: Power frequency magnetic.
- EN61000-3-2: Harmonic distortion.
- The UPS shall display agency approval mark “cCSAus” on the manufacturer’s nameplate label

**L. Manual Bypass Switch (MBP)**

- The MBP shall be a self-contain module separate from the UPS
- The MBP shall be shelf or rack mountable.
- The MBP shall have terminal blocks labeled “AC Input”, AC Output”, “To UPS” and “From UPS”.
- The MBP shall be a Break-Before-Make rotary switch.
- The MBP shall be rated at 120VAC @ 20A.
- The MBP shall have a 5-15R duplex receptacle connected to utility line.
- The MBP shall have a 5-15R receptacle labeled “Optional LA-P” to facilitate a plug-in surge suppressor.
- The MBP shall have a 5-15R receptacle labeled “Optional Battery Heater Mat” to provide non-standby power to a battery heater mat.
- The MBP shall have two positions: one labeled “UPS” to connect the utility line to the UPS, and one labeled “Bypass” to connect the utility line to the load.
- The MBP shall have a 15A circuit breaker labeled “AC Input”.
- The MBP shall have a 15A circuit breaker labeled “AC Output”.
- The MBP dimensions shall be 4.6"H x 4.75"W x 6.5"D.
- The MBP weight shall be 7lbs.

**M. Generator Transfer Switch (GTS)**

- The GTS shall sense when a portable generator is connected and transfer the load to the generator after a 30s delay.
- The GTS shall be rated for 120VAC @ 20A.
- The GTS shall be shelf or rack mountable.
- The GTS shall have a terminal block labeled “AC INPUT”, “AC OUTPUT” and “GENERATOR INPUT”.
- The GTS dimensions shall be 4.6"H x 4.75"W x 6.5"D.

- The GTS weight shall be 4lbs.

**N. Batteries for a Traffic UPS System**

- The batteries shall be Gel Cell Valve Regulated Lead Acid (VRLA) type specifically designed for outdoor use.
- The batteries shall be designed for "Float Service" to provide 100% out-of-box runtime capacity.
- The batteries shall have Silver Alloy positive plates.
- The batteries shall have a five year full replacement, non-prorated warranty.
- The battery capacity rating at 20hr shall be 94Ah.
- The battery shall be 12VDC.
- The number of batteries in the system shall be four or eight.
- The batteries shall be connected to provide 48VDC.
- The battery dimensions shall be 9.48"H x 13.42"W x 6.80"D.
- The battery weight shall be 66lbs.
- The batteries shall provide four hours backup time for full operation of a 500W traffic intersection, and an additional 9.5hr of backup time for a 125W traffic intersection operating in flash mode.
- A Battery Side Module for the 48V battery string outside the existing controller cabinet is required.

**O. Battery Charge Management System**

- The battery charge management system shall spread the charge voltage equally across four batteries.
- The battery charge management system shall compensate for batteries with different internal resistances.
- The battery charge management system shall have a quality of final balance of ±100mV maximum between any two batteries in the string.
- The battery charge management system shall have reversed polarity protection.
- The dimensions of the battery charge management system shall be 1.44"H x 4.82" W x 4.25" D with a weight of 0.8lbs.
- The battery charge management system shall be designed to CSA C22.2 No. 107.1 and UL 1778 Standards for safe unattended operation.

**P. Installation.** All aspects of installation shall be in full conformance with the manufacturer's recommendations. If any changes are required to the layout or operation of the existing equipment within a signal cabinet, the contractor shall contact the Engineer before proceeding with the work to ensure that the changes will not significantly alter the operation of the existing equipment.

**Q. Documentation.** A Quick Installation reference manual and an Operators manual shall be shipped with each unit. Both manuals shall be available in electronic format for download via the Internet or via E-mail.

**R. Warranty.** Equipment shall have a minimum warranty of two years from the date of installation.

**S. Testing Phase.** The Engineer and City of Cape Girardeau Public Works personnel shall be present with the Contractor during the testing phase of the new UPS equipment.

**802.25 Payment.** Payment for Traffic Signals shall be made at the contract price and shall include the cost of all materials, labor, equipment, installation, relocation, and maintenance, and all else necessary to provide a complete and functional project as outlined on the Plans and specified in this Section. If no pay item for Traffic Signals is included in the contract, it shall be considered incidental to the work and no direct payment will be made.

## SECTION 803 – STREET LIGHTING

**803.1 Scope.** This section governs furnishing all equipment, materials and incidental parts as required to complete the Street Lighting as shown in the Plans. Unless otherwise noted in the Plans, all equipment, materials and incidental parts shall be new. All incidental parts which are needed to properly install the system, but not shown on the Plans or described in these specifications, shall be furnished, the cost of which shall be included in the street lighting contract price.

The street lighting installation shall be complete, and the Contractor shall furnish and install all equipment necessary for the satisfactory operation of all electrical apparatus and for the complete operation of the streetlight installation whether specifically mentioned or not.

**803.2 Materials.** All lighting equipment including but not limited to luminaires, lamps and poles shall conform to the *Missouri Standard Specifications for Highway Construction*, latest edition. The streetlight pole shall be fiberglass, with a six foot minimum aluminum arm.

**803.3 Standards.** All electrical services, either above ground or underground, shall meet Ameren UE standards and requirements.

**803.4 Location.** Newly installed streetlight poles shall be located a minimum of two feet from the back of the curb and a maximum of four feet from the curb unless otherwise authorized by the Engineer. The maximum distance may be adjusted to avoid utilities or sidewalks, both existing and future, with prior approval from the Engineer.

**803.5 Mounting height.** The mounting height shall be between twenty-five and thirty feet depending on the wattage of the fixture and shall extend over the pavement three to eight feet depending on the street width.

**803.6 Bulb Type.** Unless otherwise determined by the Engineer, 100-watt high-pressure sodium lights shall be installed along non-major streets and 250-watt high-pressure sodium lights shall be installed along major streets.

**803.7 Spacing.** The following spacing requirements are general guidelines. All spacing of street lighting shall be designed appropriately and indicated on the Plans.

**A. New Major Streets.** On newly constructed major streets, streetlight spacing shall be between 230 and 260 feet unless otherwise approved by the City.

**B. Reconstructed Major Streets.** On reconstructed streets, streetlight spacing shall be between 180 and 300 feet and should be coordinated with the street design so that the street will be adequately and efficiently lit.

**C. Additional Streetlights on Existing Major Streets**. New streetlights to be added on existing streets shall be spaced between 180 and 300 feet apart.

**D. Upgrading Existing Fixtures on Existing Major Streets.** Existing 100-watt fixtures (mercury vapor and high-pressure sodium) along existing major streets shall be upgraded to 250-watt high-pressure sodium fixtures. In cases where existing streetlights are less than 180 feet apart, the City may choose to remove excess streetlights at the time the upgrades are made.

**E. Streetlights at Intersections.** Installation of streetlights is preferred at the intersections of major streets and at intersections of residential streets within subdivisions. If a major street has adequately spaced linear lighting, intersections with minor streets may not require additional streetlights. However, it is recommended that streetlights be placed within one hundred feet from the centerline of the intersecting minor street.

**F. Streetlights in New Residential Areas.** Streetlights shall be located at all intersections, at the mid-block on blocks longer than 650 feet within the subdivision, at abrupt changes in street alignment or other unusual conditions and at the end of cul-de-sacs that are greater than 350 feet from the nearest existing light.

**G. Streetlights in Existing Residential Areas.** Streetlight installation is preferred at every residential street intersection, at mid-blocks on blocks that are longer than 650 feet, at abrupt change in street alignment or other unusual condition and on cul-de-sacs that are at least 350 feet from the nearest existing light. A new streetlight may not be recommended if the cost is prohibitive, if the adjoining property owner(s) refuse to grant an easement from a power source to the streetlight or for any other reason the City determines to be non-feasible.

**803.8 Privately Installed Streetlights.** Streetlights installed without prior approval by the City or not in accordance with City policy or standards shall not be accepted as improvements and shall not be the responsibility of the City to operate or maintain.

**803.9 Payment.** Payment for Street Lighting shall be made at the contract price and shall include the cost of all materials, labor, equipment, installation, relocation, and maintenance, and all else necessary to provide a complete and functional project as outlined on the Plans and specified in this Section. If no pay item for Street Lighting is included in the contract, it shall be considered incidental to the work and no direct payment will be made.

## SECTION 804 - TRAFFIC SIGNAGE

**804.1 Scope.** This section governs furnishing all equipment, materials and incidental parts as required to complete the traffic signage as shown in the Plans. Unless otherwise noted in the Plans all equipment, materials and incidental parts shall be new. All incidental parts which are needed to properly install the system, but not shown on the Plans or described in these specifications, shall be furnished, the cost of which shall be included in the Traffic Signage contract price.

**804.2 Standard.** All sign types, locations, and mounting requirements shall conform to the Manual on Uniform Traffic Control Devices (MUTCD), latest edition. All letters numerals, arrows, symbols, borders, and other features of the sign message shall conform to "Standard Highway Signs" by the U.S. Department of Transportation - Federal Highway Administration.

**804.3 Materials.** All signing shall conform to the Highway Signing Section of the *Missouri Standard Specifications for Highway Construction,* latest edition.

**A. Signs.** Signing materials shall conform to *Missouri Standard Specifications for Highway Construction,* latest edition. Signs shall be reflectorized with Type 3 reflective sheeting according to the Highway Sign Material Section.

**B. Posts.** Sign posts shall be fourteen (14) gauge, two inch steel square tube and shall conform to the *Missouri Standard Specifications for Highway Construction,* latest edition.

**C. Hardware.** Bolts, nuts, and washers shall conform to the *Missouri Standard Specifications for Highway Construction,* latest edition. Galvanizing thickness shall not exceed six (6) mils, except for anchor bolts.

**804.4 Location.** Plans may show location of signs. Final location shall be approved by the Engineer.

**804.5 Payment.** Payment for Traffic Signage shall be made at the contract price and shall include the cost of all materials, labor, equipment, installation, relocation, and maintenance, and all else necessary to provide a complete and functional project as outlined on the Plans and specified in this Section. If no pay item for Traffic Signage is included in the contract, it shall be considered incidental to the work and no direct payment will be made.

## SECTION 805 - PAVEMENT MARKING

**805.1 Scope.** This section includes furnishing and placing pavement marking for application on Bituminous or Portland Cement Concrete Pavements. Pavement marking type and size shall be indicated on the Plans. All pavement marking shall be in accordance with the latest edition of the MUTCD. All pavement marking shall be uniform in appearance with crisp, well-defined edges and shall be uniform in width and thickness. Surface distribution of the beads, if required, shall be uniform.

**805.2 Materials.** All materials shall conform to the *Missouri Standard Specifications for Highway Construction,* latest edition and the City of Cape Girardeau's Approved Product List.

**A. Paint.** Paint shall be acrylic waterborne pavement marking paint, white or yellow in color, and shall conform to the *Missouri Standard Specifications for Highway Construction,* latest edition.

**B. Glass Beads.** Moisture resistant beads shall be Type I, unless otherwise specified, and shall conform to the *Missouri Standard Specifications for Highway Construction,* latest edition.

**C. Preformed Pavement Marking Tape**. Performed pavement marking tape shall be Type 1 or Type 2, as indicated on the Plans, and shall conform to the *Missouri Standard Specifications for Highway Construction,* latest edition.

**D. Extruded Thermoplastic.** Extruded thermoplastic shall be used only on bituminous surfaces and shall conform to the *Missouri Standard Specifications for Highway Construction,* latest edition.

**E. Epoxy Pavement Marking.** Type B shall be used on only on bituminous surfaces and shall conform to the *Missouri Standard Specifications for Highway Construction,* latest edition.

**F. Snowplowable Raised Pavement Markers.** No snowplowable raised pavement markers shall be allowed unless authorized by the Engineer.

**G. Temporary Raised Pavement Markers.** Temporary Raised Pavement Markers that have been approved for use by the Engineer shall conform to the *Missouri Standard Specifications for Highway Construction,* latest edition. Type 1 Temporary RPM's shall be used on bituminous pavements. Type 2 Temporary RPM's shall be used on Portland Cement Concrete Pavement.

**H. Preformed Short Term Pavement Marking Tape.** Preformed Short Term Pavement Marking Tape shall conform to the *Missouri Standard Specifications for Highway Construction,* latest edition.

**805.3 Equipment.** All equipment for application of pavement marking paint shall be of such design and maintained in such a condition to properly and evenly apply marking paint and drop-on beads. Paint shall be applied by motorized machine using spray guns designed and adjusted to apply paint at the required thickness and width, unless otherwise approved by the Engineer.

**805.4 Surface Preparation.** All pavement surface areas to be painted shall be clean and free of earth or materials, such as curing compound, that might prevent adhesion of the paint to the pavement surface. Paint shall not be applied in damp conditions or if there is any evidence of surface moisture on the pavement. Application conditions at the time that the painting is done shall be in accordance with the manufacturer's instructions, including temperature and receiving surface moisture content.

**805.5 Application Rates.** Paint shall be applied at a wet film thickness of 15-17 mils. The Contractor shall provide a paint thickness gauge for use by the Engineer to verify wet film thickness.

**805.6 Paint Application.** Paint shall be machine applied using spray guns designed and adjusted to apply paint at the required thickness and width. If there is any evidence of gun clogging, splattering or uneven paint distribution, painting operations shall cease until equipment is restored to proper operation.

Painting of stop bars, arrows, words, and symbols may be applied by hand using paint spray equipment. Equipment shall be capable of applying paint evenly to the required thickness. Pre-cut templates shall be used for arrows, words, and symbols.

**805.7 Glass Bead Application.** Drop-on glass beads shall be mechanically applied to the wet paint directly behind the paint spray guns. Glass beads shall be mechanically applied

evenly at a minimum of eight pounds per gallon of paint. If the beads do not adhere to the cured paint, all marking operations shall cease until corrections are made. Glass beads may be applied by hand for stop bars, arrows, words, and symbols.

**805.8 Protection.** The contractor shall protect freshly painted lines from traveling vehicles until the paint has dried sufficiently to prevent tracking of the paint.

**805.9 Scheduling**. On roadways open to traffic, permanent pavement marking shall be in place no later than five days after final paving operations. For surface treatments requiring more than five days of cure, pavement marking shall be placed in accordance with the manufacturer's recommendations and as directed by the Engineer. On roadways open to traffic, any pavement marking obliterated by milling, grinding or resurfacing operations shall be replaced with temporary pavement marking in accordance to these Specifications no later than the end of the same day, unless on the final surface, the permanent pavement marking material specified in the contract is placed by the end of the day. Pavement marking shall be replaced in the same configuration as the previously existing pavement marking unless otherwise shown on the Plans or directed by the Engineer. If the permanent pavement marking cannot be placed according to these specifications and the road is to be opened to traffic with no permanent pavement marking in place, the contractor shall, at the direction of the Engineer, place and maintain temporary pavement marking at the contractor's expense. The contractor shall remove the temporary pavement marking and place the permanent pavement marking according to these specifications and as directed by the Engineer.

**805.10 Temporary Traffic Control Plan**. The contractor shall submit a Temporary Traffic Control plan for this operation in accordance to the Section 104.10 of these Specifications. The contractor shall provide and use appropriate temporary traffic control devices such as, signs, flashing lights on vehicles, arrow and warning signs on vehicles and equipment, and any flagmen as may reasonably be required to do the work safely for both the contractor's men and equipment as well as the traveling public. Do not apply traffic and lane marking paint until layout and placement have been verified with the Engineer.

**805.11 Temporary Pavement Marking.**

**A. Temporary Raised Pavement Markers.** Temporary RPM's shall be of the colors shown on the Plans unless otherwise directed by the Engineer. Reflective faces shall be oriented to face traffic. Temporary RPM's shall be installed according to the manufacturer's recommendations and placed at approximately forty foot intervals. On resurfacing projects, temporary RPM's shall be removed on intermediate lifts of asphalt before additional lifts are laid above them. Temporary RPM's on final wearing surfaces shall be removed as directed by the Engineer. No direct pay will be given for Temporary Raised Pavement Markers.

**B. Preformed Short Term Pavement Marking Tape.** Preformed Short Term Pavement Marking Tape shall be of the colors shown on the Plans unless otherwise directed by the Engineer. Preformed Short Term Pavement Marking Tape shall be installed according to the manufacturer's recommendations. No direct pay will be given for Preformed Short Term Pavement Marking Tape.

**805.12 Pavement Marking Removal.** Removal of all pavement marking within the project limits shall be as shown on the Plans or as directed by the Engineer. Pavement marking shall be removed to the satisfaction of the Engineer with minimal damage to the pavement. No more than 5% of the existing marking shall remain. Any excess damage or scarring of the pavement shall be repaired at the contractor's expense.

**805.13 Inspection.** Permanent pavement marking will be inspected to meet all specifications and tolerances. If the inspection discloses any permanent pavement marking that does not meet the acceptance requirements, the contractor shall repair or replace such work to the satisfaction of the Engineer within thirty days of notification, at the contractor's expense.

**805.14 Submittals.** The following items shall be submitted to the Engineer for approval prior to the commencement of pavement marking:

**A.** Manufacturer's paint certification for both white and yellow colors.
**B.** Manufacturer's paint application instructions.
**C.** A wet film thickness gauge.
**D.** Method of application, including equipment type and model.
**E.** Mixed paint formulation, including % weight of pigment, vehicle, viscosity and drying time.

**805.15 Payment.**

**A. Pavement Marking.** Payment for Pavement Marking shall be made at the contract price per material type and shall include the cost of all materials, labor, equipment, installation, relocation, and maintenance, and all else necessary to provide a complete and functional project as outlined on the Plans and specified in this Section of the Specifications. If no pay item for Pavement Marking is included in the contract, it shall be considered incidental to the work and no direct payment will be made.

**B. Pavement Marking Removal.** Payment for Pavement Marking Removal shall be made at the contract price and shall include the cost of all materials, labor, equipment, installation, relocation, and maintenance, and all else necessary to provide a complete and functional project as outlined on the Plans and specified in this Section of the Specifications. If no pay item for Pavement Marking Removal is included in the contract, it shall be considered incidental to the work and no direct payment will be made.

# DIVISION 900 - STORM SEWERS

## SECTION 901 – STORM PIPES

**901.1 Scope.** The work shall consist of furnishing all labor, materials, and equipment for the complete installation of storm sewer pipe, and appurtenances, in conformance with the lines and grades shown on the Plans or as established by the Engineer and as specified herein. Item of work or materials not specifically mentioned, but necessary for the completion of storm sewer line construction shall be considered as incidental to other items in the contract.

**901.2 Materials.** Pipe

**A. Reinforced Concrete Culvert Pipe.** Reinforced concrete pipe shall be used in City Right-of-Way unless otherwise approved by the Engineer. Reinforced Concrete Culvert Pipe shall conform to the *Missouri Standard Specifications for Highway Construction,* latest edition. The pipe shape, whether circular or elliptical, shall be indicated on the Plans. Pipe shall be a minimum of Class III Concrete. When reinforced concrete elliptical pipe is to be used, it shall conform to the *Missouri Standard Specifications for Highway Construction,* latest edition.

**B. Corrugated Steel, Zinc-Coated Pipe.** Corrugated Steel, Zinc-Coated Pipe shall conform to the *Missouri Standard Specifications for Highway Construction,* latest edition. The type of pipe required shall be either circular or other configuration as indicated on the Plans.

Pipe diameters from twelve inches through twenty-four inches shall be 16 gauge, diameters over twenty-four inches through thirty-six inches shall be 14 gauge, and diameters over thirty-six inches through fifty-four inches shall be 12 gauge.

**C. Encasement Pipe.** Encasement pipes shall be designed and constructed as per Plans and job special provisions.

**D. Miscellaneous Materials.** Any materials requested for use by the contractor during construction but not described in this specification will be subject to approval by the Engineer.

**E. Concrete Pipe Joints.** Joints for concrete pipe shall have a maximum gap of ½ inch, and may be any of the following:

1. **Rubber gasket.** Shall be of the proper size, Type A, and shall conform to the *Missouri Standard Specifications for Highway Construction,* latest edition.
2. **Bituminous Mastic Joint Compound.** This compound shall be a homogenous blend of bituminous material, inert filler, and suitable solvents or plasticizing compounds thoroughly mixed at the factory to a uniform consistency.

**901.3 Construction Methods.** Refer to Section 206 and Division 600 of these specifications.

## SECTION 902 – JUNCTION BOXES, INLETS, AND CATCH BASINS

**902.1 Scope.** The work shall consist of furnishing all labor, materials, and equipment necessary to perform all operations in connection with the construction of junction boxes, inlets,

and catch basins required for the project in accordance with the specifications and Plans. Items not specifically mentioned, but necessary for completion of the work shall be considered as incidental to other items in the contract.

**902.2 Materials.**

**A. Concrete.** All concrete used within this Section shall be meet the same mix design as stated in Section 502 of these Specifications and shall conform to the *Missouri Standard Specifications for Highway Construction,* latest edition, unless otherwise approved by the Engineer.

**B. Reinforcing steel.** Shall conform to the *Missouri Standard Specifications for Highway Construction,* latest edition.

**C. Preformed Fiber Expansion Joint Filler.** Shall conform to the Cement of the *Missouri Standard Specifications for Highway Construction,* latest edition.

**D. Precast units.** May be substituted provided they meet plan intent and shall conform to *Missouri Standard Specifications for Highway Construction,* latest edition.

**E. Bedding.** See Section 301 of these Specifications.

**F. Backfilling.** See Section 206 of these Specifications.

**902.3 Construction Methods.**

**A. Forms.** Forms shall be of wood, plywood, or any other suitable material, designed, constructed, braced, and maintained so that the finished concrete will be true to line and elevation and will conform to the required dimensions. They shall be designed to withstand the pressure of the concrete; the effect of vibration as the concrete is placed in all other loads incidental to the construction operations without distortion or displacement.

**B. Inlet and Outlet Pipe.** Pipe placed in the concrete for inlet or outlet connections shall extend through the concrete walls beyond the outside surfaces of the walls a sufficient distance to allow for connections.

**C. Bedding.** The subgrade for the drainage structure shall be excavated a sufficient depth so as to provide spaced for at least four inches of aggregate bedding material between the subgrade and the structure. Aggregate bedding material shall be placed and compacted to the proper elevation. See Section 301 of these Specifications. If rock is encountered within six inches of the bottom of the structure, then excavate down a minimum of six inches and backfill with aggregate bedding material.

**D. Reinforcement.**

1. **Placement.** Reinforcing bars shall be accurately placed as shown on the Standard Drawings and shall be firmly and securely held in position by using concrete or metal chairs, spacers, metal hangers, supporting wires, and other approved devices of sufficient strength to resist crushing under full load. Metal chairs, which extend to the surface of the concrete (except where shown on the Standard Drawings), shall be used.

   Placing bars in layers of fresh concrete as the work progresses and adjusting bars during the placing of concrete shall not be permitted. Before placing in the forms, all reinforcing steel shall be cleaned thoroughly of mortar, oil, dirt, loose mill scale, loose or thick rust, and coatings of any character that would destroy or reduce the bond. No concrete shall be deposited until the placing of the reinforcing steel has been inspected and approved.

2. **Splicing.** Splices of bars shall be made only where shown on the Standard Drawings or as approved by the Engineer. Where bars are spliced, they shall be lapped at least thirty diameters, unless otherwise shown on the Plans.

   Splicing shall be accomplished by placing the bars in contact with each other and wiring them together. Welding of reinforcing steel or cutting with a cutting torch will not be permitted unless specifically authorized by the Engineer.

3. **Bending Reinforcement.** Bars shall be bent or straightened in a manner which will not injure the material. Bars with kinks or unspecified bends shall not be used.

**E. Placing Concrete.** Concrete shall be conveyed, deposited, and consolidated by any method which will preclude the segregation or loss of ingredients.

**F. Joints.** The work shall be so prosecuted that construction joints will occur at designated places shown on the Standard Drawings unless otherwise authorized by the Engineer. The contractor shall construct, in one continuous concrete placing operation, all work comprised between such joints.

All construction joints having a roughened surface shall be cleaned prior to placement of the adjacent concrete as directed by the Engineer.

Expansion and contraction joints in concrete structures shall be formed where shown on the Standard Drawings. No reinforcement shall be extended through the joints, except where specifically noted or detailed on the Plans.

No direct payment will be made for furnishing and placing asphaltic paint, premolded asphaltic filler or other types of joint separators.

**G. Backfilling.** Structures which lie within the area to be paved, or within two feet of the back of curb, such as curb inlets or junction boxes, shall be backfilled with granular material meeting the requirements of backfilling material specified in Section 302 of these Specifications. Backfill not within two feet of the paving area may be clean earth. Earth backfill shall be placed in accordance with the requirements specified in Section 206 of these specifications.

**H. Weather Requirements.** Refer to Section 504.2 of these specifications.

**I. Finishing.** Refer to Section 504.10 of these specifications.

**J. Inverts.** Inverts for inlet boxes, junction boxes, and other drainage structures shall be constructed with cement mortar after other concrete work has been done. Inverts shall be smoothly finished in accordance with the Plans and to ensure a smooth flow of water through the structure.

**K. Removal of Forms.** Forms shall remain in place until, in the opinion of the Engineer, it is safe to remove them. In determining the time for removal of forms, consideration shall be given to the location and character of the structure, the weather, and other conditions influencing the setting of the concrete and the requirements for curing and finishing.

## 902.4 Manholes and Junction Boxes.

**A. Precast Manholes.** Precast manholes shall be constructed as shown in the Standard Drawings, as specified herein and as directed by the Engineer.

**B. Manhole Base and Inverts.** All bases and inverts shall be poured individually in one continuous pour for each, unless otherwise specified and particular care taken to make channels smooth and perfect. All manhole inverts and bases shall conform to the applicable manhole standards.

Precast manhole bases may be used with precast manholes provided that the design of the base has been approved.

**C. Manhole Rings and Covers.** The rings and covers of all manholes shall be set at the elevation shown on the Plans and solidly built into place and grouted with cement mortar. Brick may only be allowed for adjustments and only with the approval of the Engineer. Any brick work that might be used shall be placed so that it will be water tight.

**D. Catch Basins and Inlets.** Precast catch basins shall be constructed in accordance with the Standard Drawings.

Reinforced concrete catch basins and inlets shall conform to the Standard Drawings. Concrete cover over steel reinforcement shall be not less that one inch for covers and 1½ inches for walls and floors. All exposed concrete shall have smooth steel trowel or brushed finish. Interiors of structures shall have the forms removed and surface voids filled.

**E. Reinforced Concrete Box Culverts.** Whether reinforced concrete box culverts are precast or cast in place, they shall conform to the *Missouri Standard Specifications and Standard Drawings for Highway Construction*, latest edition.

**F. Paved Ditches.** Paved Ditches shall not be allowed in City Right-of-Way.

**G. Headwalls, Wingwalls, and Endwalls.** These structures shall conform to the *Missouri Standard Specifications and Standard Drawings for Highway Construction*, latest edition.

**H. Railroad Crossings.** Railroad crossings shall be designed and constructed as is required by the Railroad.

## SECTION 903 – PAYMENT

### 903.1 Payment.

**A. Storm Pipe.** Payment for Storm Pipe shall be made at the contract price per material type and size and shall include the cost of all materials, labor, equipment, installation, relocation, and maintenance, and all else necessary to provide a complete and functional project as outlined on the Plans and specified in this Section of the Specifications. If no pay item for Storm Pipe is included in the contract, it shall be considered incidental to the work and no direct payment will be made.

**B. Junction Boxes.** Payment for Junction boxes shall be made at the contract price per material type and size and shall include the cost of all materials, labor, equipment, installation, relocation, and maintenance, and all else necessary to provide a complete and functional project as outlined on the Plans and specified in this Section of the Specifications. If no pay item for Junction Box is included in the contract, it shall be considered incidental to the work and no direct payment will be made.

**C. Inlets.** Payments for Inlets shall be made at the contract price per material type and size and shall include the cost of all materials, labor, equipment, installation, relocation, and maintenance, and all else necessary to provide a complete and

functional project as outlined on the Plans and specified in this Section of the Specifications. If no pay item for Inlet is included in the contract, it shall be considered incidental to the work and no direct payment will be made.

D. **Catch Basins.** Payments for Catch Basins shall be made at the contract price per material type and size and shall include the cost of all materials, labor, equipment, installation, relocation, and maintenance, and all else necessary to provide a complete and functional project as outlined on the Plans and specified in this Section of the Specifications. If no pay item for Catch Basin is included in the contract, it shall be considered incidental to the work and no direct payment will be made.

E. **Manholes.** Payments for Manholes shall be made at the contract price per material type and size and shall include the cost of all materials, labor, equipment, installation, relocation, and maintenance, and all else necessary to provide a complete and functional project as outlined on the Plans and specified in this Section of the Specifications. If no pay item for Manhole is included in the contract, it shall be considered incidental to the work and no direct payment will be made.

F. **Junction Boxes.** Payments for Junction Boxes shall be made at the contract price per material type and size and shall include the cost of all materials, labor, equipment, installation, relocation, and maintenance, and all else necessary to provide a complete and functional project as outlined on the Plans and specified in this Section of the Specifications. If no pay item for Junction Box is included in the contract, it shall be considered incidental to the work and no direct payment will be made.

# DIVISION 2000 - WATER MAIN CONSTRUCTION

## SECTION 2001- GENERAL

**2001.1 Scope.** The design and construction of water main construction shall be in conformance with Missouri Department of Natural Resources Design Guide for Community Water Systems. The work shall consist of furnishing all labor, materials, and equipment for the complete installation of water main extension and/or alterations, and appurtenances, in conformance with the lines and grades shown on the Plans or as established by the Engineer and as specified herein. Item of work or materials not specifically mentioned, but necessary for the completion of water main construction shall be considered as incidental to other items in the contract. The contractor shall employ skilled workmen to install the main. The inspector may suspend the work until, in his opinion, skilled personnel are provided. In areas where contamination may permeate into the water system, non-permeable materials for all portions of the water system shall be used including pipe, fittings, service connections, and hydrant leads. No water pipes shall be reused.

## SECTION 2002- MATERIALS

**2002.1 Materials.** Pipes, fittings, and appurtenances containing more than 8% lead shall not be used. Packing and jointing materials used in the joints of pipe shall conform to the latest edition of the American Water Works Association (AWWA) standards. Pipe having mechanical joints or slip-on joints with rubber gaskets is preferred.

Pipe shall be of the type, size, and class shown on the Plans.

**A. Ductile-Iron Pipe:** Ductile-Iron Pipe shall conform to the latest edition of AWWA, ASTM, Plastic Pipe Institute (PPI), or Unibell Plastic Pipe Association standards or recommendations, AWWA C151 Ductile Iron Pipe, Centrifugally Cast, for water or other liquids, Class 50, push-on joint, cement-mortar lined, bituminous coated.

**B. Polyvinyl Chloride (PVC), 4”-12”:** PVC Pipe, 4”-12” shall conform to the latest edition of AWWA, ASTM, Plastic Pipe Institute (PPI), or Unibell Plastic Pipe association standards or recommendations. PVC that is less than 3 inches in diameter must be at least Class 200 and conform to SDR-21. PVC pipes three inches to twelve inches in diameter shall be no less than Class 160 and conform to SDR-26. Polyvinyl Chloride 1120 pipe, meeting AWWA C900 PVC Pipe and Fabricated Fittings, 4 In.-12 In. (100 mm-300 mm), for Water Transmission and Distribution, outside diameter equivalent to cast iron pipe, 150 PSI pressure class, DR (dimension ratio) 18, gasket bell-end coupling. Installation requirements shall be the same as cast iron or ductile iron pipe.

**C. PVC Pipe, 14”-24”:** PVC Pipe, 14”-24”shall conform to the latest edition of AWWA, ASTM, Plastic Pipe Institute (PPI), or Unibell Plastic Pipe association standards or recommendations. Where specified, shall be polyvinyl 1120 pipe, meeting AWWA C905 Polyvinyl Chloride (PVC) Pressure Pipe and Fabricated Fittings, 14 in. Through 48 in. (350 mm Through 1,200 mm), for water transmission and distribution, cast iron outside diameter, DR 18, pressure Class 235.

**D. HDPE DR 11.** Shall be installed under the direction of a certified welder. Concrete straddle block restraints shall be installed at points of tie-in to prevent movement.

**E. Ductile Iron Fitting:** Ductile Iron Fitting shall conform to the latest standards issued by the AWWA and shall be certified by NSF for use in drinking water. To meet AWWA C110 Ductile-Iron & Gray-Iron Fittings for water, mechanical joint, cement-mortar lined, bituminous coated; 12 inch and smaller fittings to be 250 lb.; 16 inch and larger fittings to be 150 lb.

**F. PVC Fittings 6”-8”:** PVC Fittings 6”-8”shall conform to the latest standards issued by the AWWA and shall be certified by NSF for use in drinking water. For use with PVC C900 pipe, pressure class 150.

**G. Gate Valves:** Gate Valves shall conform to the latest standards issued by the AWWA and shall be certified by NSF for use in drinking water. NRS resilient wedge for buried service, conforming as a minimum to AWWA C509 Resilient-Seated Gate Valves for Water Supply Service; 2” square operating nut; open left; MJxMJ; wedge rubber shall be molded and bonded in place to the wedge and shall not be mechanically attached with screws, rivets, or similar fasteners; wedge shall seat so the seating is equally effective regardless of direction of pressure unbalanced across the wedge; waterway shall be full diameter, smooth and shall have no depressions or cavities in the seat area where foreign material can lodge and hinder closure or sealing, the valve body and bonnet shall be fusion bonded epoxy coated, inside and out, and the valve shall be provided with stainless steel bonnet and packing bolts.

**H. Tapping Valves:** Tapping Valves shall conform to the latest standards issued by the AWWA and shall be certified by NSF for use in drinking water. Same as Gate Valves above except that it shall be equipped with a raised lip constructed in accordance with MSS-SP60 to provide for centering of the valve on the tapping saddle.

**I. Butterfly Valves:** Butterfly Valves shall conform to the latest standards issued by the AWWA and shall be certified by NSF for use in drinking water. Rubber-seated for buried service, conforming as a minimum to AWWA C504 Rubber-Seated Butterfly Valves; 2” square operating nut; open left; MJxMJ; butterfly shall seat so the seating is equally effective regardless of direction of pressure unbalanced across it, the resilient seat shall be attached to the body of the valve and not the butterfly, the valve interior shall be epoxy coated and the exterior shall be epoxy or bituminous coated.

**J. Tapping Sleeves:** Tapping Sleeves shall conform to the latest standards issued by the AWWA and shall be certified by NSF for use in drinking water. Manufactured from all stainless steel group 18-8, material 304 including sleeve, outlet neck, outlet flange, and all bolts and nuts; seal to be full circumferential gridded and approved for potable water; flanged outlets shall be indexed per MSS-SP 60 to accept tapping valves with an ANSI 150 lb. Drilling IAW, according to AWWA C207 Steel Pipe Flanges for Waterworks Service- Sizes 4 In. Through 144 In. (100 mm Through 3,600 mm); neck to accept full size cutter.

**K. Concrete:** All concrete used within this Section shall be meet the same mix design as stated in Section 503 of these Specifications and shall conform to the *Missouri Standard Specifications for Highway Construction*, latest edition, unless otherwise approved by the Engineer.

**L. Anchors, Inserts, Reinforcements:** All thread rod shall be 5/8”or ¾” stainless steel, group 18-8, material 304, minimum yield of 70 KSI, minimum tensile 100 KSI. Nuts shall be hex head, 5/8” or ¾” stainless steel, group 18-8, material 304.

**M. Casing Pipe**:

1. **Steel:** Steel casing pipe wall thickness shall conform to the following schedule:

| Casing Diameter | Minimum Wall Thickness |
|---|---|
| 6,8,10,12” | .188” |
| 14,16,18” | .250” |
| 20,22,24,26,28,30” | .3125” |
| 32 through 48” | .4375” |

All pipe shall conform to all applicable requirements of AWWA C200 Steel Water Pipe 6 In. (150 mm) and Larger, and shall be installed per AWWA M11 Steel Water Pipe: Guide for Design and Installation Manual, latest edition, and if fabricated shall be constructed of A36 steel with a minimum yield point of 36 KSI; or if manufactured shall conform to Grade B with a minimum yield point of 35 KSI. All casing pipe is to be joined with 360 degree welds. It shall be mill primed and coated with bituminous based coating before installation. Where coating is damaged during installation, it shall be repaired and replaced by thorough brushing of scraping material to sound material and applying two coats of the coating material.

2. **Concrete pipe:** Concrete pipe utilized for encasements shall be steel reinforced concrete pipe and shall conform in both material and installation specification of the *Missouri Standard Specifications for Highway Construction*, latest edition.

**2002.2 Material Handling.**

**A. PVC Pipe and Fittings**: Shall be handled according to guidelines set out in the AWWA M23 PVC Pipe- Design and Installation manual. The pipe shall not be handled with individual chains or single cables, even if padded. They shall not be dropped to the ground or into the trench and shall not be dropped or rolled against other objects on the ground. Gaskets shall be protected from excessive exposure to direct sunlight, ozone, oil, and grease. If stored for extended periods, the pipe and fittings shall be protected from direct sunlight and shall be laid so as not to become deformed or bent.

**B. Ductile Iron Pipe and Accessories.** The handling of pipe, fittings, valves, hydrants, and accessories shall conform as a minimum to AWWA C600 Installation of Ductile-Iron Water Mains and Their Appurtenances. They shall be loaded and unloaded by lifting with hoists or skidding so as to avoid shock or damage. Under no circumstances shall such materials be dropped or rolled against pipe or fittings already on the ground.

## SECTION 2003 – LOCATION

**2003.1 Location.**

**A. Alignment and Grade:** The water mains shall be laid, and valves, hydrants, and fittings shall be placed in accordance with Plans.

All pipe shall have a minimum of 42 inches of cover over the top of the pipe unless otherwise approved by the Engineer.

**B. Dead Ends:** The dead end of a main shall have a fire hydrant, flushing hydrant, or approved flush assembly for flushing purposes. Flush assemblies shall be a minimum 2" for 6" and 8" mains, a minimum 4" for 10" and 12" mains, and a fire hydrant assembly for 16" mains. Larger mains shall utilize a flushing assembly that provides a minimum of 4fps water velocity within the pipe at flushing.

**C. Ells, Tees, Plugs, and Hydrants:** All fittings shall have thrust reinforcement, either in the form of approved manufactured restraint, stainless steel rods, or a properly designed thrust block of concrete. Hydrant assemblies (tees, valves, and hydrants) shall use anchor couplings for thrust reinforcement.

**D. Water Mains Near Sewers:**

**1. Horizontal Separation:** A water main shall be laid at least ten (10) feet horizontally from any existing combined storm or proposed sanitary sewer line. The distance shall be measured outside pipe edge to outside pipe edge. Should local conditions prevent a lateral separation of ten (10) feet, the water main may be laid closer than ten (10) feet to a combined storm or sanitary sewer line provided that the water main is laid in a separate trench or on an undisturbed earth shelf located on one side of the sewer line and at such an elevation that the bottom of the water main is at least eighteen (18) inches above the top of the sewer line. When it is impossible to obtain vertical and horizontal separation, the sewer line must be re-laid to provide the required separation or the sewer line shall be designed as a pressure line and then re-constructed using ductile iron pressure pipe. The sewer pipe shall then be pressure tested to assure water tightness prior to backfilling. The water main backfill shall be of compacted clay to a minimum of eighteen (18) inches surrounding the water main. In no case shall the water main and the sewer main share the same granular fill bed. No potable water pipe shall be located closer than ten (10) feet to any part of a combined storm or sanitary sewer manhole.

**2. Separation at Crossings:** Where water mains must cross over or under a combined storm or sanitary sewer, the water main must be laid at such an elevation that the bottom of the water main is at least eighteen (18) inches above the top or below the bottom of the sewer, and a full length (18' minimum) of water main pipe must be centered across the sewer so that both of the joints will be equally distant from the sewer and as remote therefrom as possible. This minimum vertical separation must be maintained for that portion of the water main located less than ten (10) feet from the sewer to be measured edge of pipe to edge of pipe, water main to sewer line. Backfill shall be of compacted clay to a minimum of eighteen (18) inches surrounding the outside dimension of the water main and for a horizontal distance of at least ten (10) feet from the sewer being crossed. In no case shall the water main and the sewer share the same granular fill bed.

Where water mains must cross under a combined storm or sanitary sewer, permanent structural support for the sewer shall also be installed to prevent settling.

**3. Unusual Conditions:** Where conditions prevent the minimum separations as set forth above from being met or maintained, the Missouri Department of Natural

Resources shall be consulted regarding necessary precautions to be taken to protect the public water supply.

**4. Sanitary Sewer Force Mains:** There shall be at least ten (10) feet of horizontal separation between water mains and sanitary sewer force mains and they shall be in separate trenches. In areas where these separations cannot be obtained, either the waterline or the sewer line shall be cased in a continuous casing.

**5. Disposal facilities:** No waterline shall be located closer than 25 feet to any on-site wastewater disposal facility, agricultural waste disposal facility, or landfill.

## SECTION 2004 – EXCAVATION AND PREPARATION OF THE TRENCH

**2004.1 Excavation and Preparation of the Trench.** Refer to Section 206 of these Specifications.

Size and Alignment: The trench shall be excavated such that the pipe can be laid to the proper grade and alignment as shown on the approved Plans. Bell holes shall be provided at each joint to permit proper jointing and ensure the pipe is supported evenly along the entire length of the barrel. This is especially important for the PVC pipe. Hand excavation shall be employed in trenching when deemed necessary by the Engineer.

## SECTION 2005 – PIPE LAYING

**2005.1 Pipe Laying**. All pipe, fittings, valves, and hydrants shall be carefully lowered into the trench by means of ropes or mechanical equipment. Under no conditions may they be dropped or thrown. If he so desires, the inspector may hammer test all cast or ductile iron pipe before it is lowered into the trench. Ends of all pipe must be thoroughly cleaned.

After placing a length of pipe in the trench, the spigot end shall be centered in the bell, the pipe forced home and brought to the proper grade and alignment. The pipe shall be secured in place with proper backfill material tamped around and over it except at the bells. Bells shall be in the direction of laying operations.
At noon, at night, or any time that work is delayed, the open end of the line must be covered. All joint deflections must be within the pipe manufacturer's recommendations, and hereby included in and made a part of these specifications.

PVC pipe may be deflected around curves so long as deflection is in the joint only. No strain shall be placed on the pipe for the purpose of deflection. Manufacturers may vary in the amount of deflection which can be obtained in the pipe joint and their specifications should be consulted. In the absence of manufacturer specifications, use 1.5 degrees per twenty foot section in the following schedule.

ALLOWABLE PVC PIPE DEFLECTION AT JOINT ONLY

| DEGREE OF DEFLECTION IN JOINT | OFFSET PER 20' SECTION IN INCHES | MIN. RADIUS OF CURVATURE |
|---|---|---|
| 5 | 21 | 230' |
| 3 | 12 | 380' |
| 2 | 8 | 570' |
| 1.5 | 6 | 760' |

MAXIMUM DEFLECTION OF DUCTILE IRON PIPE PUSH-ON JOINT

| SIZE OF PIPE INCHES | DEFLECTION DEGREES IN JOINT | OFFSET PER 18' SECTION | MIN. RADIUS CURVATURE |
|---|---|---|---|
| 6" TO 12" | 5 | 19" | 205' |
| 16" TO 24" | 3 | 11" | 340' |

Blocking is not recommended, but if it is necessary, the pipe barrel must be supported in at least three places. Pre-cast concrete blocks shall not be used. No pipe fitting shall be laid in or under water.

Jointing: All joints must be made as per the manufacturer's recommendations and AWWA Specifications.

Valves: Valves shall be located as designated on the Plans at street, bridge, railroad, waterway crossings, dead end, and at all fire hydrants.

All valves shall be protected by a valve box of six inches minimum diameter, the top of which shall be to the same grade as the existing terrain or finished grade.

## SECTION 2006 – ANCHORAGE

**2006.1 Anchorage. Plugs, Caps, Bends:** All plugs, caps, tees, end valves, fire hydrant valves, and bends, unless otherwise indicated on approved Plans, shall be anchored to prevent movement by providing suitable reaction backing in the form of concrete thrust blocks or approved manufactured restraints. Tie rods shall be installed in accordance with the following schedule.

NUMBER OF TIE RODS REQUIRED FOR A CLOSED VALVE OR DEAD END

| -- | 6" | 8" | 10" | 12" | 16" | 24" |
|---|---|---|---|---|---|---|
| 5/8" RODS | 2 | 4 | -- | -- | -- | -- |
| 3/4" RODS | 2 | 2 | 4 | 4 | 8 | 14 |

## SECTION 2007 – BACKFILLING.

**2007.1 Backfilling.** See Sections 206 and 303 of these Specifications.

## SECTION 2008 – TESTING

**2008.1 Testing.**

**A. Pressure.** After the pipe has been laid and backfilled, all newly laid pipe or any valve section thereof shall be subject to a hydrostatic pressure of 150- 200 PSI (approximately 150% maximum operating pressure) for a period of one hour. This pressure test will be made by the Water Division forces. The contractor will be responsible for the cost of taps for this test. Any defects in pipes, valves, fittings, or hydrants must be immediately corrected by the contractor and successive test shall be run until satisfactory to the Engineer.

**B. Connections to Existing Mains.** Under no conditions will any party or parties other than Water Division forces be allowed to make any taps or connections to an existing main.

**C. Operation of Existing Pressurized Valves.** All valves under pressure in the mains supplied by the Water Division shall be operated only by employees of the Water Division except in cases of extreme emergency.

**D. Leakage.** After satisfactory completion of the aforesaid pressure test, a leakage test shall be run. Leakage test shall be maintained for a period of at least 18 hours under a pressure of 100PSI. All lines shall meet AWWA leakage standards as shown on the following chart and said chart is hereby made a part of these specifications.

ALLOWABLE LEAKAGE FOR DUCTILE IRON AND PVC PIPE

| Average Test | | | | | | | |
|---|---|---|---|---|---|---|---|
| Pressure PSI | 6 | 8 | 12 | 16 | 18 | 20 | 24 |
| 100 | 1.62 | 2.16 | 3.24 | 4.32 | 4.86 | 5.41 | 6.49 |
| 125 | 1.82 | 2.42 | 3.65 | 4.84 | 4.86 | 6.05 | 7.27 |
| 150 | 1.99 | 2.64 | 3.96 | 5.30 | 5.98 | 6.62 | 7.92 |
| 200 | 2.29 | 3.06 | 4.59 | 6.12 | 6.89 | 7.68 | 9.20 |
| 225 | 2.43 | 3.24 | 4.85 | 6.50 | 7.30 | 8.10 | 9.72 |
| 250 | 2.56 | 3.42 | 5.12 | 6.85 | 7.70 | 8.59 | 10.12 |

Note: Allowable leakage per 100 joints – gph (pipe diameter in inches)

**E. Final Tests.** After final test procedures and main is connected to the existing system, it shall be subjected to normal working pressure. If, at any time within one year of final inspection, any trouble or failure in the respective line or lines occurs that can be directly attributed to faulty workmanship or defective materials, it shall be the owners or developers financial responsibility to repair.

**F. Disinfection.** All disinfection, chlorination, and flushing of main will be done by the Water Division of the City of Cape Girardeau, Missouri to meet AWWA C651 Disinfecting Water Mains. Contractor shall furnish and place disinfecting media, preferably a 70% hypochlorite granular form, in the mains as pipe is laid. Disinfecting media shall be placed in the manner and in amounts as specified by the Engineer, but to be a minimum of 50 PPM.

Pounds of Granular form = 50 PPM x vol. of pipe length cu. Ft. x 2.83 % Available CL (wt. of tablet grams)

Following disinfection and flushing, bacteriological samples shall be collected by the Water Division personnel. Water from the new main shall remain isolated from other waters in the City system, and shall not be made available for consumption until bacteriological testing indicates that the water meets drinking water standards of the Missouri Department of Natural Resources.

## SECTION 2009 – PAYMENT

**2009.1 Payment.**

**A. Pipe.** Payment for Pipe shall be made at the contract price per material type and size and shall include the cost of all materials, labor, equipment, installation, relocation, and maintenance, and all else necessary to provide a complete and functional project as outlined on the Plans and as specified in this Section. If no pay item for Pipe is included in the contract, it shall be considered incidental to the work and no direct payment will be made.

**B. Valves.** Payment for Valves shall be made at the contract price per material type and size and shall include the cost of all materials, labor, equipment, installation, relocation, and maintenance, and all else necessary to provide a complete and functional project as outlined on the Plans and as specified in this Section. If no pay item for Valves is included in the contract, they shall be considered incidental to the work and no direct payment will be made.

**C. Tapping Sleeves.** Payment for Tapping Sleeves shall be made at the contract price per material type and size and shall include the cost of all materials, labor, equipment, installation, relocation, and maintenance, and all else necessary to provide a complete and functional project as outlined on the Plans and as specified in this Section. If no pay item for Tapping Sleeves is included in the contract, they shall be considered incidental to the work and no direct payment will be made.

**D. Anchors, Inserts, Reinforcements.** Payment for Anchor, Inserts, and/or Reinforcements shall be made at the contract price per material type and size and shall include the cost of all materials, labor, equipment, installation, relocation, and maintenance, and all else necessary to provide a complete and functional project as outlined on the Plans and as specified in this Section. If no pay item for Anchors, Inserts, Reinforcements is included in the contract, these items shall be considered incidental to the work and no direct payment will be made.

# DIVISION 3000 - SANITARY SEWER MAIN CONSTRUCTION

## SECTION 3001 – SCOPE

**3001.1 Scope.** The design and construction of sanitary sewer construction shall be in conformance with Missouri Department of Natural Resources Clean Water Commission Design Guide. These specifications shall apply to the construction of all cast iron, ductile iron, vitrified clay, or polyvinyl chloride sewer line (gravity and pressure), and the construction of all appurtenances, including manholes, pipe ends, and other items called for. The work under this section consists of furnishing all labor, materials, equipment, and incidentals, and performing all operations necessary in connection with the installation of the sanitary sewer system complete as shown on the Plans and as herein specified. These materials and work shall be subject to inspection and standard testing by the Engineer, or his authorized agents, before being placed as part of the project. All rejected materials and work shall at once be removed from the project.

## SECTION 3002 – MATERIALS

**3002.1 Vitrified Clay Pipe and Fittings.** No new Vitrified Clay Pipe shall be allowed in the City's Right-of Ways.

**3002.2 Ductile Iron Pipe and Cast Iron Pipe, Fittings, and Valves**

**A. Ductile Iron Pipe and Fittings.** All ductile iron pipe three (3) inches through sixty-four (64) inches in diameter and all joint types shall conform to ANSI A21.51/AWWA C151 Ductile-Iron Pipe, Centrifugally Cast, and shall be Pressure Class 50. The pipe shall have a cement mortar lining installed in accordance with ANSI A21.4/AWWA C104 Cement-Mortar Lining for Ductile-Iron Pipe and Fittings for water. The outside coating shall be a bituminous coating approximately one mil thick. Ductile iron gravity sewer pipe shall also conform to ANSI/ASTM A746 Standard Specification for Ductile Iron Gravity Sewer Pipe.

Ductile iron pipe fittings shall conform to the ANSI/AWWA C111 AWWA Standard for Rubber-Gasket Joints for Ductile-Iron Pressure Pipe and Fittings, and shall have a cement mortar lining installed in accordance with ANSI A21.4-95/AWWA C104 Cement-Mortar Lining for Ductile-Iron Pipe and Fittings for water. The outside coating shall be a bituminous coating approximately one mil thick. The fittings shall be the same pressure class as the specified ductile iron pipe.

**B. Gate, Check, and Air Relief Valves.** Gate valves used in ductile iron or cast iron pressure sewer lines shall be the AWWA non-rising stem type with cast iron bodies. The valves shall be the bronze mounted, parallel seated, double disc type, with four point wedging mechanisms and double disc assemblies. Gate valves located underground shall have mechanical joints; those not located underground shall have flanged fittings.

Check valves shall be the lever and spring operated swing type. The valves shall be fully bronze mounted, with cast iron bodies and stainless steel hinge pins. The valves

shall be capable of being mounted in either horizontal or vertical position.

Air relief valves shall be placed at high points in the pressure sewer line and at the locations indicated on the Plans. Automatic air relief valves suitable for use on wastewater force mains shall be required.

**C. Cast Iron Pipe.** No new Cast Iron Pipe shall be placed within the City's Right-of-Way.

**3002.3 Polyvinyl Chloride Pipe, Fittings, Valves, and Adaptors**

**A. PVC Pressure Sewer Pipe.** PVC plastic pressure sewer pipe shall be Pressure Class 150 and shall conform to AWWA C900 PVC Pipe and Fabricated Fittings, 4 in. Through 12 in. (100 mm Through 300 mm), for Water Transmission and Distribution. The PVC pipe shall have molded bell push-on joints with elastomeric-gasket couplings. The male end shall be marked by a painted ring showing the proper insertion. The PVC pipe shall bear the National Sanitation Foundation (NSF) seal of approval.

Fittings for the PVC pipe shall be furnished by the pipe manufacturer and shall accommodate the pipe for which they are to be used. The fittings shall have a minimum pressure rating of 150 psi. Insertion depth of the pipe in the coupling shall be controlled by an internal PVC mechanical stop in the coupling which will allow for thermal expansion and contraction. All fittings must bear the NSF seal of approval.

**B. PVC Gravity Sewer Pipe.** PVC plastic gravity sewer pipe shall be SDR 35 with a minimum pipe stiffness (PS) of 46 psi and shall conform to the requirements of the latest revision of the ASTM D3034 Standard Specification for Type PSM Poly(Vinyl Chloride) (PVC) Sewer Pipe and Fittings. The pipe shall be joined with a bell and spigot type of elastomeric gasket joint. All fittings shall utilize elastomeric gasket joints.

**C. Gate, Check, and Air Relief Valves.** Gate, check, and air relief valves used on PVC plastic pressure sewer pipe shall conform to the requirements described in Item 3002.2B of this section of these specifications. All gate and check valves shall have a mechanical joint PVC adaptor at each end.

**D. Manhole Adaptors.** Where polyvinyl chloride PVC sewer pipe is laid into a manhole, manhole adaptors shall be a neoprene coupling, or otherwise approved water stop material, shall be grouted into the manhole wall. The adaptors shall be installed in accordance with the manufacturer's recommendations as approved by the Engineer.

**3002.4 Steel Encasement Pipe.** Encasement pipe shall be smooth wall, welded steel pipe with the following dimensions:

| Casting Diameter | Minimum Wall Thickness |
|---|---|
| 6, 8,10,12,14, and 16 inch | 0.188 inches |
| 18, 20, and 22 inch | 0.250 inches |
| 24 and 26 inch | 0.281 inches |
| 28, 30, 32, and 34 inch | 0.312 inches |
| 6, 38, 40, and 48 inch | 0.344 inches |

The inside diameter of the casing shall be two inches (minimum) larger than the bell or coupling of the pipe encased or as indicated on the Plans.

## SECTION 3003 – CONSTRUCTION CASTINGS

**3003.1 Construction Castings**

**A. General Requirements.** All castings shall be made of clean, even grain, tough, gray cast iron. The casting shall be smooth, true to pattern, and free from projections, sand holes, warp and other defects which would interfere with the use of, or impair the service ability of, the casting. All castings shall be well cleaned before inspection.

The following portions of cover seats, round frames, and covers intended for vehicular traffic shall be machined: framed-horizontal surface of cover seat, cover under surface upon which the cover seat rests. It shall not be possible to rock any cover after it has been seated in any position in its frame.

**B. Manhole Frames and Covers.** The manhole castings shall consist of a frame and solid checkered or knobbed cover.

**C. Manhole Steps.** Manhole steps shall be steel reinforced copolymer polypropylene. There shall be no manhole steps constructed in manholes where a force main meets a gravity main.

**3003.2 Precast Reinforced Concrete Manholes.** The precast reinforced concrete manhole risers and grade rings shall be one type and shall be constructed in accordance with the requirements described herein. The 48-inch diameter straight section shall be furnished in 48-inch, 36-inch, 24-inch, and 12-inch lengths; each section shall have tongue and groove ends and lifting holes to facilitate handling and installation. The taper section shall be on piece 36 inches high and conical, either concentric or eccentric, with its inside diameter tapering uniformly from 48 inches to 24 inches. Each precast section shall have permanently embedded steel reinforced copolymer polypropylene manhole steps arranged to provide steps in the finished manhole on 16 inch vertical centers.

**3003.3 Poured-In-Place Concrete Manholes.** The poured-in-place concrete manhole shall be constructed of concrete conforming to Section 502 of these Specifications.

**3003.4 Asphalt Waterproofing.** The asphalt used for waterproofing the exterior of the manholes.

**3003.5 Reinforcement Steel.** Steel bars for concrete reinforcement shall be new billet steel, intermediate grade.

**3003.6 Concrete.** All concrete used within this Section shall be meet the same mix design as stated in Section 502 of these Specifications and shall conform to the *Missouri Standard Specifications for Highway Construction*, latest edition, unless otherwise approved by the Engineer.

## SECTION 3004 – INSTALLATION

**3004.1 Pipe Installation.**

**A. Excavation.** See Earthwork Division of these specifications.

**B. Laying Pipe.** All pipe and fittings shall be lowered into the trench piece by piece using derricks, ropes, or other suitable tools or equipment in such a manner as to prevent damage to the pipe. Under no circumstances shall pipe or other materials be dropped or dumped into the trench. Hooks shall not be allowed to come into contact with the joint or coupling material.

Before lowering or while suspended over the trench, each piece of pipe shall be inspected for defects. Any defective, damaged, or unsound pipe shall be rejected and shall be immediately removed and replaced.

Joint contact surfaces shall be cleaned immediately before jointing. The joints shall be assembled in accordance with the recommendations of the pipe manufacturer.

Foreign material shall be prevented from entering the pipe while it is being placed in the trench. During laying operations, no debris, tools, clothing, or other materials shall be placed in the pipe.

Pipe laying for gravity sewer shall start at the lowest point and the pipe installed so that the spigot ends point in the direction of flow. All pipes shall be laid straight between changes in alignment and at uniform grade between changes in grade. Blocking shall not be used to bring the pipe up to grade.

At times when pipe laying is not in progress, the open ends of pipe shall be closed by a water-tight plug or other means approved by the Engineer. When practical, the plug shall remain in place until the trench is pumped dry. Care must be taken to prevent pipe flotation should the trench fill with water.

All necessary cutting of the pipe shall be done in a neat, workmanship like manner with the least amount of waste. The cut end shall be beveled before jointing.

As each length of pipe is placed in the trench, the joint shall be assembled and the pipe brought to correct line and grade. The pipe shall be secured in place with approved bedding or backfill material.

See Section 2003.1 of these specifications for separation and crossing requirements of water and sanitary sewer.

**C. Bedding**. See Section 207 of these specifications.

**D. Backfilling.** See Sections 206 and 303 of these Specifications.

**E. Pavement Repair.** See Division 600 of these Specifications.

**F. Thrust Restraints for Pressure Pipe.** All plugs, caps, tees, and bends, unless otherwise specified, shall be provided with reaction backing, or suitably restrained by attaching metal rods, clamps, or restrained joints approved by the Engineer. Vertical and horizontal reaction backing shall be made of concrete having a compressive

strength of not less than 2000 psi after twenty-eight days. Concrete backing shall be placed between solid ground and the fitting to be anchored; the area of bearing on the pipe and on the ground in each instance shall be that shown or directed by the Engineer. The backing shall be so located as to contain the resultant thrust force and so that the pipe and fitting joints will be accessible for repair.

Restrained push-on joints, mechanical joints utilizing set-screw retainer glands or metal harness of tie rods or clamps may be used instead of concrete backing. Tie rods, clamps, or other components of dissimilar metal shall be protected against corrosion by hand application of a bituminous coating or by encasement of the entire assembly with 8-mil thick, loose polyethylene film.

**G. Pressure Pipe Identification.** Since installed pressure sewer pipe could be confused with potable water mains, the pressure sewer line shall be identified by laying a solid copper wire #12 attached to the pipe and a plastic flagging tape in the trench approximately one foot above the pipe for the entire length of the pressure line. The tape shall be a minimum of three inches wide and marked "SEWER" at least every three feet. Other methods of identification submitted by the Contractor will be considered for approval by the Engineer.

**3004.2 Service Connections and Risers.** If shown on the Plans, wye branches for house services shall be provided in the gravity sewer lines. The wye branches shall have a minimum internal diameter of four inches and shall be of the same material class, and quality as specified for the gravity sewer pipe as specified with a per unit price for a why branch with bend and stopper as an additional bid item. In street Rights-of-Way, all wye branches shall be extended to a point behind the Right-of-Way line.

The exact location of all wye branches shall be measured by the Contractor from the center of the nearest manhole downstream in the same line of pipe so that a true and accurate record may be made and preserved for future use prior to the concealment by backfilling. No payment shall be made to the Contractor for wye branches that have no recorded location.

**3004.3 Stream and Ditch Crossing.** Stream or ditch crossings of pressure or gravity sewers shall be constructed of ductile iron pipe with mechanical joints as specified herein. Stone shall be used to backfill the trench.

Cleanup, grading, seeding, planting, or restoration of all work areas in streams or ditches shall begin immediately upon completion of the crossing. Exposed areas shall not remain unprotected for more than seven days.

Whenever deemed necessary, the Contractor will be required to pave around stream crossings, etc., to protect the installation where wash is anticipated. This paving shall consist of rip rap stone of good quality that will not disintegrate under the action of air or water, and shall be in pieces as nearly cubical in form as practical. No pieces shall be less than twenty pounds, nor more than 150 pounds in weight. The Contractor may substitute precast concrete blocks for stone, with the approval of the Engineer as to the size and quality of concrete to be used. Payment for rip rap paving shall be made at the unit price bid for this item, which price shall include all labor, material, and equipment

required to do the necessary grading and furnishing the completed paving in place.

Crossing Beneath Stream Channel. The top of pipe entering or crossing streams or ditches shall be at sufficient depth below the natural bottom of the stream bed to protect the sewer pipe. In general, the following cover requirements shall be met: one foot of cover shall be required where the sewer pipe is located in rock; a minimum of three feet of cover shall be required in other material; in major streams, more than three feet will be required and the depth shall be shown in the plans; in paved stream channels, the top of the pipe shall be placed a minimum of one foot below the bottom of the channel pavement.

Aerial Crossings shall not be allowed except as may be approved by the Engineer.

**3004.4 Highway and Railroad Crossings.** Any work done on state highway Right-of-Way shall be done in accordance with the appropriate permit issued by the State Highway Department. The Contractor shall be responsible to the Highway Department, as well as to the Owner, for any work done on highway Right-of-Way. The Owner shall in no way assume any responsibility or liability for complying with the highway permit.

Any work done on railroad right-of-way shall be done in accordance with the appropriate permit issued by the railroad authority. The Contractor shall be responsible to the railroad authority, as well as to the Owner, for any work done on railroad Right-of-Way. The Owner shall in no way assume any responsibility or liability for complying with the railroad permit.

All state highway and railroad sewer line crossings shall be bored and encased, or as directed by the Engineer, and approved by the State Highway Department or railroad authority. The carrier pipe shall be ductile iron as specified in Section 2002.1 of these specifications. The casing pipe shall be steel pipe as specified in 2002.1 of these specifications. Carrier pipe may be pushed or pulled through the completed casing pipe. Chocks or skids must be made of insulating material, and shall be placed on the carrier pipe to ensure approximate centering with the casing pipe and to prevent damage during installation. Care shall be exercised to avoid metal-to-metal contact. The maximum span between supports for pipe lengths shall not exceed nine feet.

**3004.5 Manholes.** Manholes shall be installed as shown on the Plans and constructed as shown on the Standard Drawings.

Pipe openings shall preferably be cast in the manhole sections; however, pipe openings may be cut or broken on the job provided care is used. The joint between the sewer pipe and the manhole section shall be filled with expanding cement grout and asphalt waterproofing shall be applied to the exterior of the grouted joint to form a permanent watertight seal.

Where the pipe connects to the manhole wall, the connection shall be made with a product manufactured for the purpose as shown on APL, unless otherwise approved by the Engineer.

An invert in each manhole bottom shall be constructed to accommodate the inflowing and outflowing sewers with full pipe size flow channels carefully and smoothly shaped and finished to prevent sewage splashing and turbulence. All changes of flow directions within manholes shall be made with the maximum practical radius curves. Where possible, the sewer pipe shall be laid through the manhole, and then the upper half of the pipe shall be removed to form the invert. The manhole floor outside the inverts shall be smooth and shall slope toward the invert at least one inch per foot.

The tops of the manholes shall be set as follows, unless otherwise indicated on the Plans or directed by the Engineer:

In streets, roads, highways, driveways, or other paved areas: flush with finished paving elevation.

Undeveloped areas, such as fields, woods, etc.: eighteen inches above ground.

Other areas, such as lawns, playgrounds, etc.: twelve inches above ground.

Where the difference in elevation between the incoming sewer and the manhole invert is less than twenty-four inches, a drop pipe shall not be used, but the invert shall be filleted with concrete to form a flow channel and prevent solid buildup. A drop-in manhole shall be constructed as shown on Standard Drawings.

Where the drop exceeds twenty-four inches, a drop manhole as shown on Standard Drawings shall be constructed. The drop pipe shall be constructed of the same size pipe as the sewer line being dropped.

The precast manhole sections shall be assembled to the required height. Where precast sections are jointed together, an approved mastic sealant or rubber gasket (natural or synthetic) shall be utilized on the contact area of the sections to establish an effective watertight joint. This shall be in addition to any concrete grouting or other methods employed in making the joint.

A cast-in-place manhole base shall be cast monolithically with the rest of the manhole. The invert and flow channel shall be formed during or immediately after the placing of the concrete. The concrete shall set for twenty-four hours before any pipe inside the manhole is trimmed. The base shall have a minimum diameter eight inches greater than the outside diameter of the manhole, and a minimum thickness, including the area under the pipe, as follows:

| Depth of Manhole | Base Slab Thickness |
|---|---|
| 0 to 8’ | 8” |
| More than 8’ to 12’ | 10” |
| More than 12’ | 12” |

Manhole steps shall be spaced on sixteen inch maximum vertical centers. In general, steps shall be located 90 degrees from the direction of flow of the manhole and shall not be over or opposite a major pipe. The walls of the cast-in-place manhole shall be a minimum of six inches thick.

The vertical forms, wall spacers, steps, and placing cone shall be carefully positioned and firmly clamped in place before any concrete placement is made. The wall spacers shall be located 90 degrees from each other. Then manhole shall be cast of 4000 psi concrete with a maximum slump of four inches. The first placement shall consist of approximately one half cubic yard of concrete deposited evenly around the walls and vibrated until there is a minimum slope of 60 degrees from the bottom of the forms to the bearing surface both inside and outside of the manhole. When this is complete and before additional concrete is poured, the concrete shall be carefully vibrated on each side of the pipe. Additional concrete must be deposited in evenly distributed layers of eighteen inches vibrated to bond to the preceding layer. The wall spacers must be raised as the concrete is poured. Excessive vibration shall be avoided. The forms may be removed as soon as the concrete has set sufficiently to eliminate any possibility of cracking. If cracks occur, the Engineer may direct the Contractor to remove the entire manhole, including the base, and replace it.

Backfilling shall be performed evenly and carefully around the manhole after the concrete has set forty-eight hours, or otherwise directed by the Engineer.

Where force mains enter manholes and for any manhole with an entering drop greater than two feet shall be coated with $H_2S$ resistant coating as shown in the APL.

**3004.6 Infiltration.** Materials used for sewer joints shall have satisfactory records for preventing infiltration and the entrance of roots.

## SECTION 3005 – TESTING OF SEWERS

**3005.1 General.** All gravity sewer lines shall be tested upon completion of installation. Testing of the Sewers shall be incidental to the project and no direct pay will be granted. Equipment for performing the tests and making the measurements shall be furnished by the Contractor, unless otherwise specified. Sections of the sewer which fail to pass the tests shall have the defects located and repaired or replaced and then be retested until within the specified allowance.

**3005.2 Cleaning – Gravity Sewers.** Prior to other tests, the Contractors shall clean and inspect all sewer lines for major defects. Pre-cleaning by an appropriately sized sewer cleaning ball or by high velocity jet or other methods may be necessary.

**3005.3 Visual and TV Tests.** All sewer lines shall be inspected visually to verify accuracy of alignment and freedom from debris and obstructions. The full diameter of the pipe shall be visible when viewed between consecutive manholes. The method of test shall be by visually lamping with mirrors and lights. New mains shall be videoed via TV cameras no less than thirty days after installation.

**3005.4 Leakage Test – Gravity Sewers.** The Contractor shall perform low air pressure tests on all complete gravity line sections and crossings, in accordance with the procedures of the ASTM C828 Standard Test Method for Low-Pressure Air Test of Vitrified Clay Pipe Lines, the latest revision thereof, in the presence of the Engineer, to demonstrate that the

lines are free of leaks.

The air testing equipment used shall meet the following minimum requirements:

- Pneumatic plugs shall have a sealing length equal to or greater than the diameter of the pipe to be inspected.
- Pneumatic plugs shall resist internal test pressures without requiring external bracing or blocking.
- All air used shall pass through a single control panel.
- Three individual hoses shall be used for the following connections:
    - From control panel to pneumatic plugs for inflation.
    - From control panel to sealed line for introducing the low pressure air
    - From sealed line to control panel for continually monitoring the air pressure rise in the sealed line.

All pneumatic plugs shall be seal tested before being used in the actual test installation. One length of pipe shall be laid on the ground and sealed at both ends with the pneumatic plugs to be checked. Air shall be introduced into the plugs to 25 psig. The sealed pipe shall be pressurized to 5 psig. The plugs shall hold against this pressure without bracing and without movement of the plugs out of the pipe.

After the manhole to manhole reach of pipe has been backfilled and cleaned and the pneumatic plugs are checked by the above procedure, the plugs shall be placed in the line at each manhole and inflated to 25 psig. Low pressure air shall be introduced into this sealed line until the internal air pressure reaches 4 psig. At least two minutes shall be allowed for the air pressure to stabilize.

After the stabilization period (3.5 psig minimum pressure in the pipe), the air hose from the control panel to the air supply shall be disconnected. That portion of the line being tested shall be termed "Acceptable" if the time required in minutes for the pressure to decrease from 3.5 to 2.5 psig (greater than the average back pressure of any ground water that may be over the pipe) shall not be less than the following:

Table 1. Minimum Test Time for Various Pipe Sizes

| Nominal Pipe Size, in. | T (time) min/100 ft. | Nominal Pipe Size, in. | T (time) min/100 ft. |
|---|---|---|---|
| 3 | 0.2 | 21 | 3.0 |
| 4 | 0.3 | 24 | 3.6 |
| 6 | 0.7 | 27 | 4.2 |
| 8 | 1.2 | 30 | 4.8 |
| 10 | 1.5 | 33 | 5.4 |
| 12 | 1.8 | 36 | 6.0 |
| 15 | 2.1 | 39 | 6.6 |
| 18 | 2.4 | 42 | 7.3 |

If the installation fails to meet this requirement, the Contractor shall, at his own expense, determine the source of leakage. He shall then repair or replace all defective materials and/or workmanship.

For the purpose of leakage tests, manholes shall be considered pipe of equivalent diameter and shall be tested by a method acceptable to the Engineer. If the installation is below the ground water level, further testing may be required by the Engineer.

**3005.5 Infiltration.** Materials used for sewer joints shall have satisfactory records for preventing infiltration and the entrance of roots.

**3005.6 Deflection Test – PVC Gravity Sewers.** Deflection tests shall be performed, in the presence of the Engineer, on all PVC gravity sewer pipe. The test shall be performed not less than thirty days after final backfill has been placed. No pipe shall exceed a deflection of 5 percent. Devices for testing include shall be properly sized go-no go mandrel. If the defection test is performed using a mandrel, they shall have a diameters equal to 95 percent of the inside diameter of the pipe and the test shall be performed without mechanical pulling devices.

## SECTION 3006 – LIFT STATIONS

**3006.1 Scope.** This section outlines the type of pumps and electrical controls to be installed at new sewage lift stations and old sewage lift stations to be renovated. In order to properly and orderly maintain the lift stations, the City standardizes the pumps and electrical controls as much as possible. Therefore, any alterations to the construction shall be approved by the Engineer.

**3006.2 Motors and Pumps.** Any electric motor or electrical control panel to be exposed to the weather or sewer water will be drip proof enclosure for the motor and watertight panel box for the electrical starter. Submersible pumps shall be used with stainless steel rails (not cables). The station shall have a quick connect above ground or in the valve pit on the discharge piping for each pump. All lift stations shall include dual pumps at a minimum. The control panel shall alternate the starts of the pumps. The controls shall be a chain and anchor float system with a weight at the bottom to keep the chain and floats out of the pumps and guide rails. Chain shall be able to be pulled up for adjustment of floats without entering the hatch. A spare pump shall be provided to the City as part of the installation.

For motors less than 5 horsepower, a 220 volt, single phase motor is required.

For motors 5 horsepower or greater, a 480 volt, 3 phase motor is required.

**3006.3 Electrical services.** All overhead services shall be secured to a stationary pole. These poles shall meet Ameren UE's requirements. Rigid conduit is to be used for the stack. The entire entrance is to be bonded and grounded, including the EMT covering the ground wire. If it is not possible for the service to be overhead, then rigid conduit (sized according to the gauge of wire and number of conductors) buried at a minimum of thirty-six inches from top of the grade is required. The length of the underground service is not

to exceed fifty feet, or as approved by the Engineer.

**3006.4 Interior wiring.** Rigid conduit is to be used from the motor starter panel to the motor pot head. Watertight flexible conduit can be used not to exceed 18 inches from the end of the conduit to the motor pot head. All wiring which controls the float bulbs is to be placed in rigid conduit to a point entering the wet well.

One 110V receptacle with a gfi breaker is required as well as proper 110V lighting. This receptacle circuit as well as the lighting circuit is to be placed in EMT.

All conduit, both motor circuits and lighting circuits, will be bonded and grounded and will be properly anchored.

All wire will be copper, stranded, TW or THW and sized according to the ampere load.

All exposed lightbulbs to have guards, if these guards are metal they will be bonded and grounded.

The control panel shall contain an interior 110 Volt outlet .

**3006.5 Piping.** All piping inside lift stations shall be Schedule 80 PVC or Stainless Steel.

Suction side-- Going into wet well a combination (wye and one-eighth bend) with plug in top shall be used.

Discharge side-- On each pump there will be a check valve and a gate valve. The hookup shall all be long sweep fittings.

All hanging pipe will be properly supported and braced. The Plans shall indicate whether a pumphouse or an open all-weather station is to be constructed.

**3006.6 Wet Well.** The wet well shall be coated with approved product as stated in the APL. Wet well shall have a minimum diameter of four feet in diameter. A valve pit shall have a drain for water to enter the wet well. A standard manhole shall be set on the incoming side of the wet well.

**3006.7 Lift Station Facility Requirements.** The lift station shall have an aluminum hatch that opens toward the control panel, in order for an operator to see into the wet well while standing at the panel. It shall have an exterior floodlight controlled by a switch in the panel. Light shall be positioned to shine into or toward the hatch. The lift station shall have a below grade hose bib or a freeze proof hose bib.

The lift station will be enclosed by a chain link fence. The area enclosed by the fence shall be a concrete surface. The lift station shall have a paved or gravel drive for access. The drive shall be a minimum of twelve feet in width and twenty-five feet in length. A separate parking area may be provided.

**3006.8 SCADA Requirements.** All components shall be as listed in the APL. Items required for a SCADA system into a lift station:

**A**. One logic controller
**B.** One PLC cable
**C.** One radio
**D.** One telemetry modem
**E.** One power supply
**F.** One lightning arrestor
**G.** Antenna cable; length will vary with application
**H.** Cable ends and connectors as necessary for connection of antenna to radio
**I.** VHF antenna with gain for most applications, depends on location
**J.** Antenna mast, length and construction will depend on location; may be a standard tower or a conduit style mast.
**K**. One 'null-modem' adapter, for connection from PLC to modem
**L.** One 'gender changer' for the null modem adapter. (Both PLC and modem are DCE communication devices, and have to be switched.)

**3006.9 Portable Generator Connections.** All components shall be as listed in the APL. Items required for auxiliary electrical power (portable generator) connection at a lift station

**A. 480 Volt -3 Phase Lift Station**

1. 200 AMP 3 Pole non fused double throw disconnect switch
2. 3P-4W PIN and sleeve receptacle
3. The receptacle connect to the bottom of the disconnect switch.

**B. 230 Volt Single Phase Lift Station**

1. 100 AMP 2 200 AMP 3 Pole non fused double throw disconnect switch
2. L14-30 Male receptacle, twist and lock type
3. The receptacle connect to the bottom of the disconnect switch.

## SECTION 3007 – PAYMENT

**3007.1 Payment.**

**A. Pipe.** Payment for Pipe shall be made at the contract price per material type and size and shall include the cost of all materials, labor, equipment, installation, relocation, and maintenance, and all else necessary to provide a complete and functional project as outlined on the Plans and as specified in this Section. If no pay item for Pipe is included in the contract, it shall be considered incidental to the work and no direct payment will be made.

**B. Valves.** Payment for Valves shall be made at the contract price per material type and size and shall include the cost of all materials, labor, equipment, installation, relocation, and maintenance, and all else necessary to provide a complete and functional project as outlined on the Plans and as specified in this Section. If no pay item for Valve is included in the contract, it shall be considered incidental to the work and no direct payment will be made.

**C. Manholes.** Payment for Manholes shall be made at the contract price per material type and size and shall include the cost of all materials, labor, equipment, installation, relocation, and maintenance, and all else necessary to provide a complete and functional project as outlined on the Plans and as specified in this

Section. If no pay item for Manhole is included in the contract, it shall be considered incidental to the work and no direct payment will be made.

**D. Lift stations.** Payment for Lift Stations shall be made at the contract price per material type and size and shall include the cost of all materials, labor, equipment, installation, relocation, and maintenance, and all else necessary to provide a complete and functional project as outlined on the Plans and as specified in this Section. If no pay item for Lift Station is included in the contract, it shall be considered incidental to the work and no direct payment will be made.

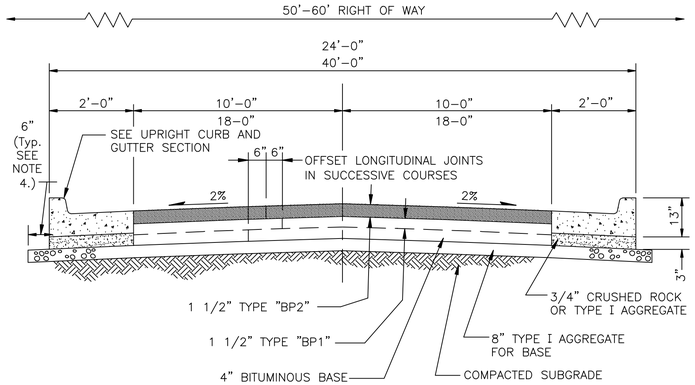


NOTES:

1. THE LATEST EDITION OF THE CITY STANDARD SPECIFICATIONS, DIVISION 400, SHALL APPLY FOR ASPHALTIC CONCRETE PAVEMENT.
2. ALL PC CONCRETE SHALL BE 28–DAY, 4000 PSI STRENGTH.
3. INSTALL SAW JOINTS IN CURB AND GUTTER SECTION AT 15 FEET MAXIMUM SPACING AND SEAL WITH BITUMINOUS JOINT SEALANT PER SPECIFICATIONS.
4. 6 INCHES SHOWN IS THE MINIMUM REQUIREMENT AND THE PAY LIMIT FOR THE BASE.

**1 - STANDARD LOCAL STREET**

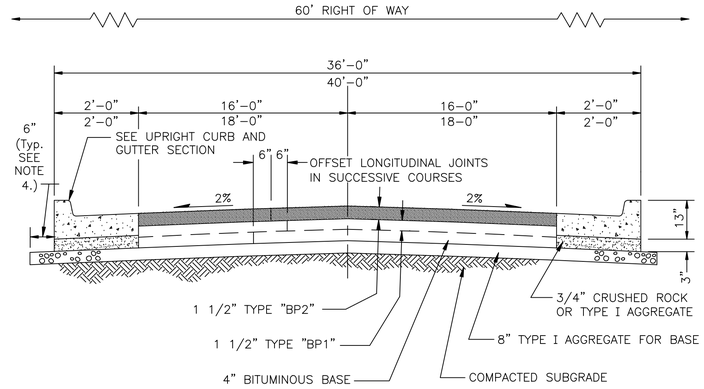


NOTES:

1. THE LATEST EDITION OF THE CITY STANDARD SPECIFICATIONS, DIVISION 400, SHALL APPLY FOR ASPHALTIC CONCRETE PAVEMENT.
2. ALL PC CONCRETE SHALL BE 28–DAY, 4000 PSI STRENGTH.
3. INSTALL SAW JOINTS IN CURB AND GUTTER SECTION AT 15 FEET MAXIMUM SPACING AND SEAL WITH BITUMINOUS JOINT SEALANT PER SPECIFICATIONS.
4. 6 INCHES SHOWN IS THE MINIMUM REQUIREMENT AND THE PAY LIMIT FOR THE BASE.

**2 - STANDARD COLLECTOR STREET**

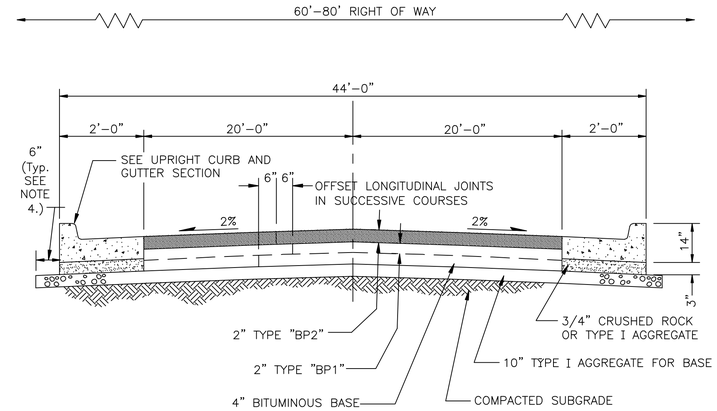


NOTES:

1. THE LATEST EDITION OF THE CITY STANDARD SPECIFICATIONS, DIVISION 400, SHALL APPLY FOR ASPHALTIC CONCRETE PAVEMENT.
2. ALL PC CONCRETE SHALL BE 28–DAY, 4000 PSI STRENGTH.
3. INSTALL SAW JOINTS IN CURB AND GUTTER SECTION AT 15 FEET MAXIMUM SPACING AND SEAL WITH BITUMINOUS JOINT SEALANT PER SPECIFICATIONS.
4. 6 INCHES SHOWN IS THE MINIMUM REQUIREMENT AND THE PAY LIMIT FOR THE BASE.

**3 - STANDARD ARTERIAL STREET**

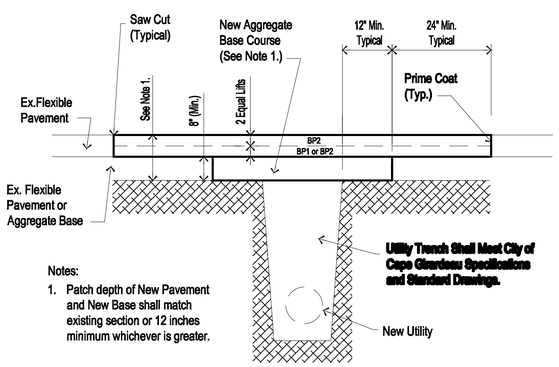


Notes:

1. Patch depth of New Pavement and New Base shall match existing section or 12 inches minimum whichever is greater.

**4 - FLEXIBLE PAVEMENT REPAIR**
**(SEE SPECIFICATION SECTION 602)**

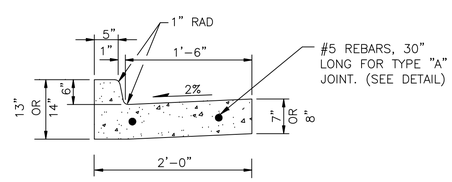


**5 - UPRIGHT CURB AND GUTTER SECTION**

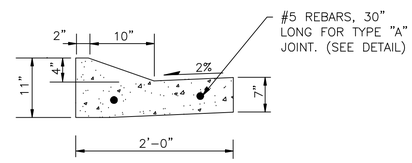


(LIP CURB MAY BE ALLOWED ON LOCAL AND COLLECTOR STREETS ONLY.)

**6 - LIP CURB AND GUTTER SECTION**

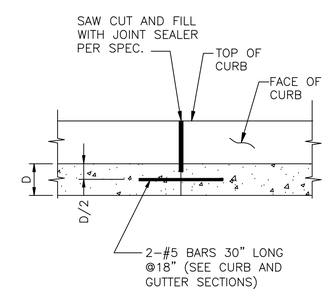


**7 - CURB AND GUTTER ELEVATION**
**(TYPE A ( WITH TIE BAR) CONSTRUCTION JOINT)**

SURVEY BY: --
DESIGNED BY: City of Cape
DRAWN BY: DEW
CHECKED BY: KG
SCALE: Not to Scale UN

| NO. | DATE | REVISIONS | BY |
|---|---|---|---|

# Standard Details for Asphalt Streets

(This standard is current as of March 01, 2010)

CITY OF CAPE GIRARDEAU
401 INDEPENDENCE ST.
CAPE GIRARDEAU, MO. 63702
ENGINEERING DIVISION

The Original drawing is sealed and signed by Kelly Green P.E., City Engineer, May 27, 2010.

Asphalt Streets

JOB NO.
FIELD BOOK

U:\Dwnld Wildfire\New Standard Details\100002 as Plotted for Drawer\01 100001 Asphalt Street.dwg, Asphalt Street 36A, 6/25/2010 12:10:25 PM

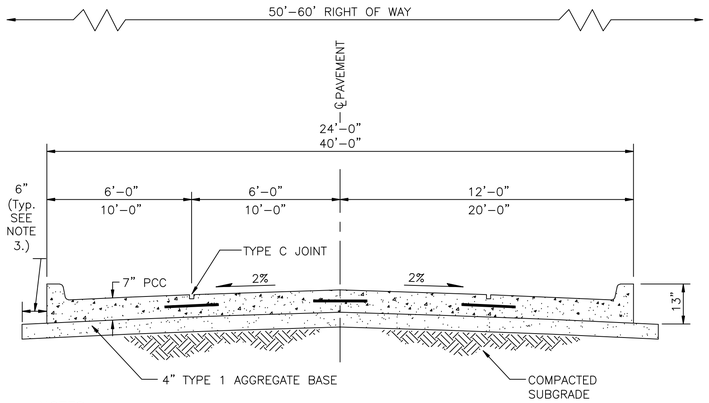


NOTES:

1. ALL P.C. CONCRETE SHALL BE 28–DAY 4,000 PSI STRENGTH.
2. SEE STANDARD JOINT DETAILS.
3. 6 INCHES SHOWN IS THE MINIMUM REQUIRED AND THE PAY LIMIT FOR THE BASE.

**1 - STANDARD LOCAL STREET**

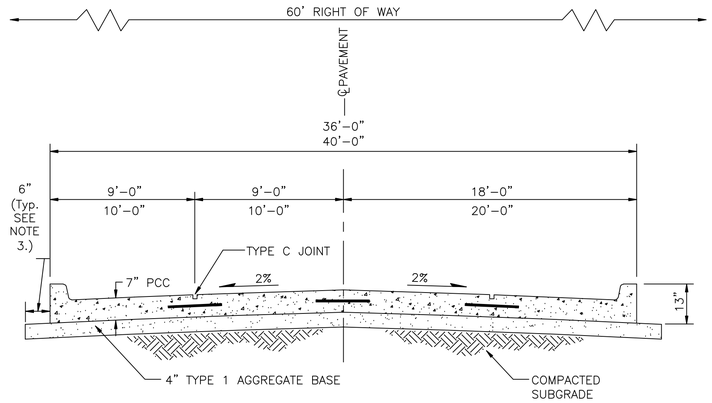


NOTES:

1. ALL P.C. CONCRETE SHALL BE 28–DAY 4,000 PSI STRENGTH.
2. SEE STANDARD JOINT DETAILS.
3. 6 INCHES SHOWN IS THE MINIMUM REQUIRED AND THE PAY LIMIT FOR THE BASE.

**2 - STANDARD COLLECTOR STREET**

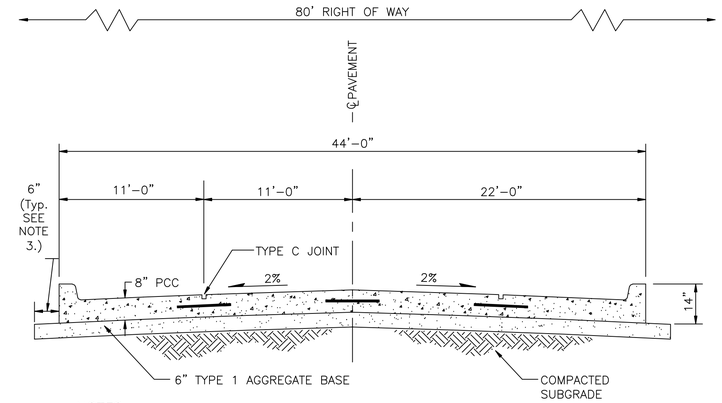


NOTES:

1. ALL P.C. CONCRETE SHALL BE 28–DAY 4,000 PSI STRENGTH.
2. SEE STANDARD JOINT DETAILS.
3. 6 INCHES SHOWN IS THE MINIMUM REQUIRED AND THE PAY LIMIT FOR THE BASE.

**3 - STANDARD ARTERIAL STREET**

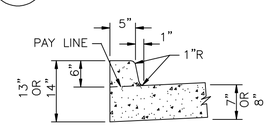


**4 - INTEGRAL UPRIGHT CURB SECTION**

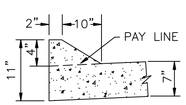


(LIP CURB MAY BE ALLOWED ON LOCAL AND COLLECTOR STREETS ONLY.)

**5 - INTEGRAL LIP CURB SECTION**

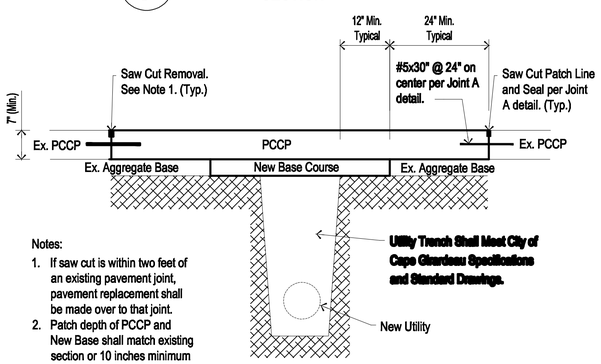


Notes:

1. If saw cut is within two feet of an existing pavement joint, pavement replacement shall be made over to that joint.
2. Patch depth of PCCP and New Base shall match existing section or 10 inches minimum whichever is greater.

**6 - PORTLAND CEMENT CONCRETE PAVEMENT REPAIR**
**(SEE SPECIFICATION SECTION 603)**

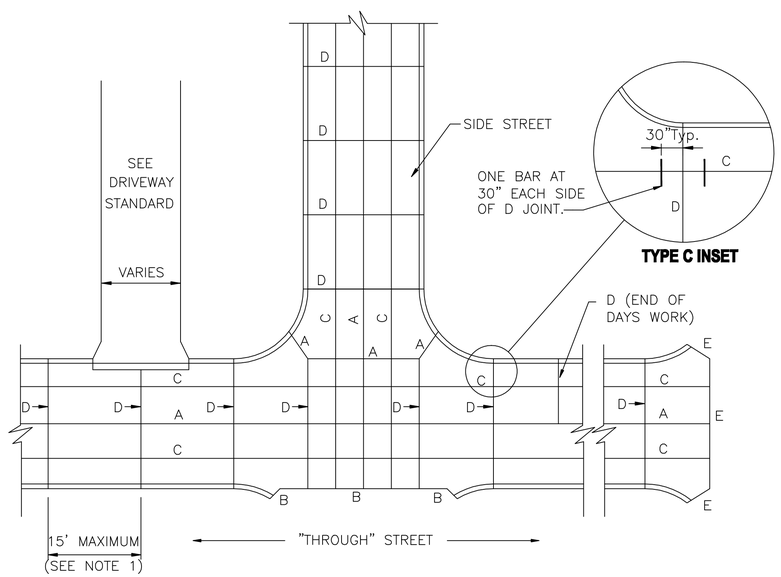


NOTES:

1. JOINTS SHALL BE MAXIMUM SPACING OF 15 FEET FOR 8–INCH PAVEMENTS AND 14 FEET FOR 7–INCH PAVEMENTS. SLAB SIZES SHALL BE LIMITED TO A 3 TO 2 RATIO.
2. TRANSVERSE D JOINTS SHALL BE SAWED AS SOON AS CONCRETE CAN WITHSTAND RAVELLING. JOINTS SHALL BE CLEANED AND FILLED WITH BITUMINOUS COMPOUND FOLLOWING THE SAWING.
3. USE TYPE E JOINT AT THE END OF THE DAYS WORK.

**7 - STANDARD JOINT LAYOUT**

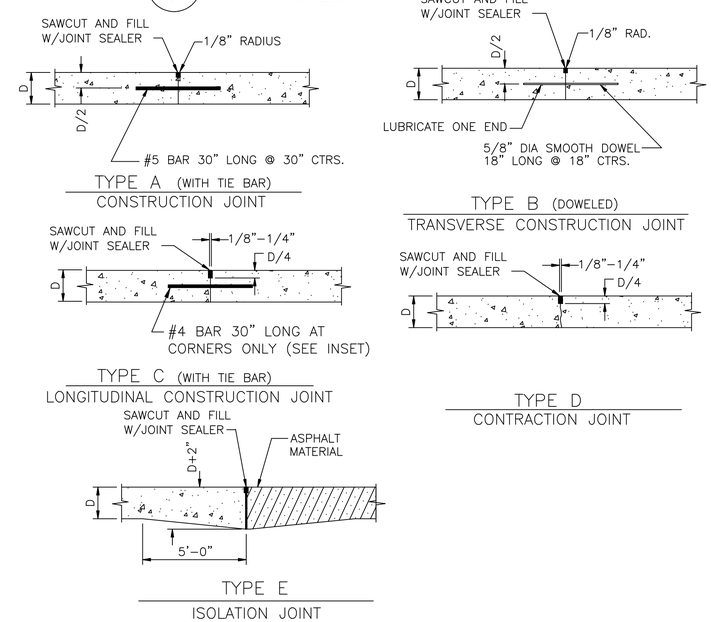


NOTES:

1. CITY OF CAPE GIRARDEAU STANDARD SPECIFICATIONS SHALL APPLY.
2. SAW CUT DEPTH SHALL BE ONE QUARTER OF THE PAVEMENT THICKNESS (D).
3. BARS THAT ARE DRILLED SHALL BE TIGHTLY SET WITH EPOXY FILLER.

**8 - STANDARD JOINT DETAILS**

SURVEY BY: --
DESIGNED BY: City of Cape
DRAWN BY: DEW
CHECKED BY: KG
SCALE: Not to Scale UN

| NO. | DATE | REVISIONS | BY |
|---|---|---|---|

# Standard Details for Concrete Streets

(This standard is current as of March 01, 2010)

CITY OF CAPE GIRARDEAU
401 INDEPENDENCE ST.
CAPE GIRARDEAU, MO. 63702
ENGINEERING DIVISION

The Original drawing is sealed and signed by Kelly Green P.E., City Engineer, May 27, 2010.

Concrete Streets

JOB NO.
FIELD BOOK

U:\Dwnld Website\New Standard Details\100302 as Plotted for Drawer\02 and 03 100301 Concrete Street and Driveway Aug. 02 Concrete Street SIL 03\20\10 12:23:23 PM

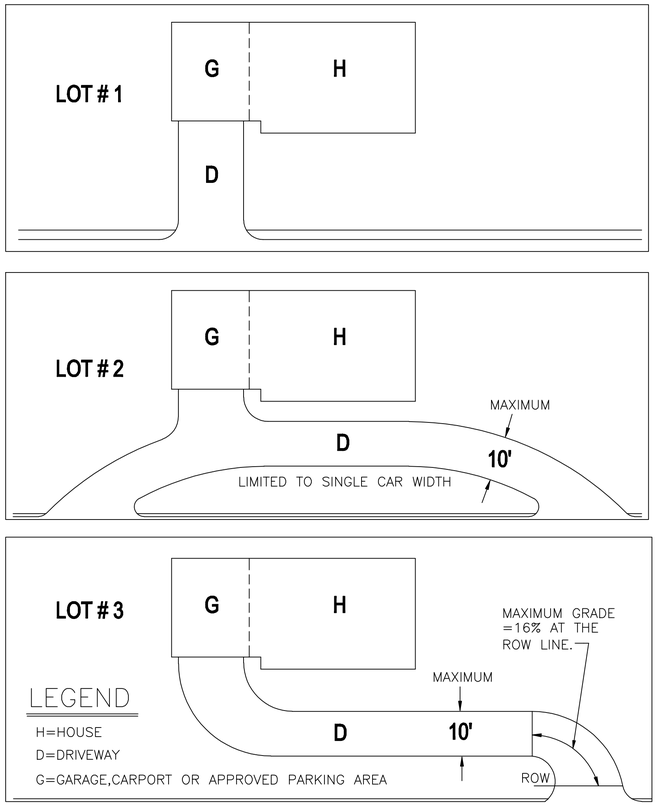


GENERALLY ALL DRIVEWAY CONFIGURATIONS ARE ACCEPTABLE AS LONG AS THEY LEAD TO AN "APPROVED PARKING AREA", ADA REQUIREMENTS ARE MET AND THE MAXIMUM GRADE AT THE RIGHT-OF-WAY LINE <= 16%.

1 — **DRIVEWAY CONFIGURATION STANDARD DETAILS**

Driveway Grade on Right-of-Way:

RESIDENTIAL---1/2" PER FOOT
COMMERCIAL---1/4" PER FOOT
INDUSTRIAL----1/4" PER FOOT

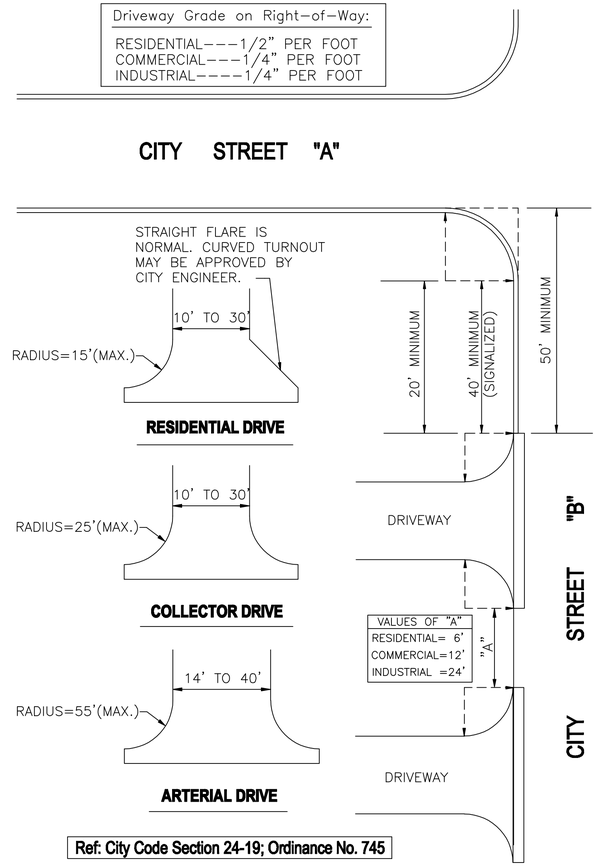


Ref: City Code Section 24-19; Ordinance No. 745

2 — **DRIVEWAY DESIGN STANDARD DETAILS**
Sheet 1 of 2

| DESIGN CRITERIA | RESIDENTIAL | COMMERCIAL | INDUSTRIAL |
|---|---|---|---|
| Width at End of Radius | 10'-30' | 10'-30' | 14'-40' |
| Radius | Maximum 15' | Maximum 25' | Maximum 55' |
| Grade on Right-of-Way | 1/2" Per Foot | 1/4" Per Foot | 1/4" Per Foot |
| Spacing Between the Ends of radii at the Curbline | 6' | 12' | 24' |
| Corner Clearance (In no case to be less than 50' as measured from the intersection of the tangent lines of the corner radius.) | 20' between ends of Radii of street corner and driveway and 40' between ends of Radii if intersection is signalized. | | |

3 — **DRIVEWAY DESIGN STANDARD DETAILS**
Sheet 2 of 2

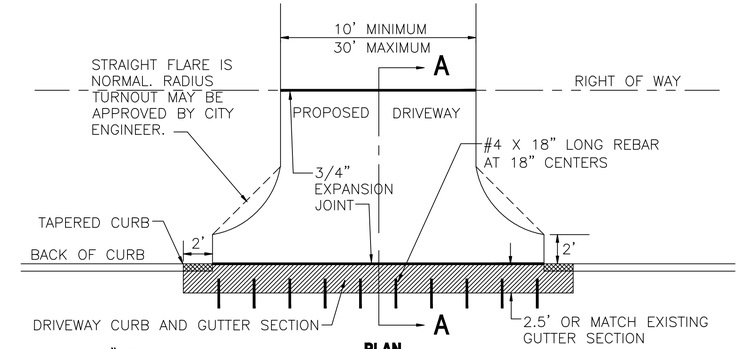


**PLAN**

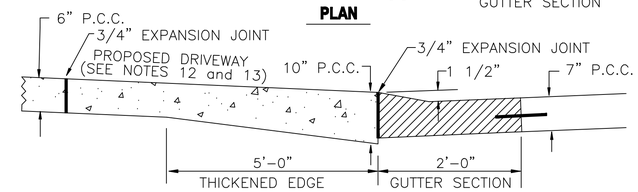


**SECTION A-A**

NOTES:

1. CONCRETE AND JOINTS SHALL BE PLACED IN ACCORDANCE WITH STANDARD DETAILS AND THE CURRENT EDITION OF THE STANDARD SPECIFICATIONS, CITY OF CAPE GIRARDEAU, MISSOURI.
2. DRIVEWAY WIDTH AND RADIUS SHALL BE PLACED AS SPECIFIED BY CITY CODE SECTION 24-19.
3. TAPER END OF CURB AS DIRECTED TO MATCH NEW DRIVEWAY.
4. SAW PAVEMENT TO A THREE AND ONE HALF (3 1/2) INCH MINIMUM DEPTH.
5. SAW PAVEMENT TO FULL DEPTH. PLACE NEW PAVEMENT WITH TWO (2) INCH THICKENED EDGE NEXT TO EXISTING PAVEMENT.
6. PLACE DEFORMED BARS ONE HALF OF THE DEPTH OF PAVEMENT.
7. HATCHED SYMBOL AREA DENOTES PORTLAND CEMENT CONCRETE TO BE REMOVED AND REPLACED.
8. A SIX (6) INCH CURB SHALL NOT BE DEPRESSED OVER FOUR AND ONE HALF (4 1/2) INCHES.
9. ALL DRIVEWAYS WITHIN CITY RIGHT-OF-WAY SHALL BE CONCRETE.
10. ON RESIDENTIAL DRIVES A RADIUS IN LIEU OF A WING MAY BE CONSTRUCTED, SUBJECT TO APPROVAL OF THE CITY ENGINEER.
11. NO DRIVEWAY CURBS ARE ALLOWED ON CITY RIGHT-OF-WAY.
12. ALL DRIVEWAYS SHALL BE CONSTRUCTED IN COMPLIANCE WITH ADA REQUIREMENTS WHETHER OR NOT A SIDEWALK CONNECTION IS MADE.
13. MAXIMUM GRADE WITHIN THE RIGHT-OF-WAY SHALL BE 12 PERCENT.

4 — **DRIVEWAY PLAN AND CURB AND GUTTER SECTION**

SURVEY BY: --
DESIGNED BY: City of Cape
DRAWN BY: DEW
CHECKED BY: KG
SCALE: Not to Scale UN

| NO. | DATE | REVISIONS | BY |
|---|---|---|---|

# Standard Details for Driveways

(This standard is current as of March 01, 2010)

CITY OF CAPE GIRARDEAU
401 INDEPENDENCE ST.
CAPE GIRARDEAU, MO. 63702
ENGINEERING DIVISION

The Original drawing is sealed and signed by Kelly Green P.E., City Engineer, May 27, 2010.

Driveways

JOB NO.
FIELD BOOK

L:\Dwd\ Whitlow\New Standard Details\100802 as Plotted for Dmaw\02 and 03 100301 Concrete Street and Driveway .dwg, 03 Driveway Std, 6/3/2010 12:25:07 PM

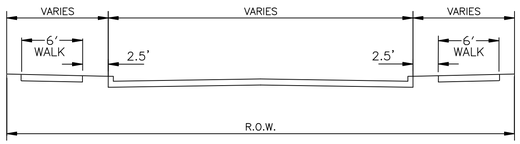


COLLECTOR AND ARTERIAL

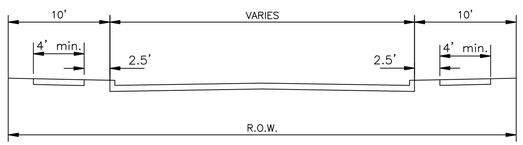


RESIDENTIAL

Note: Coordinate sidewalk and curb inlet installations. See Curb Inlet Details.

1 TYPICAL SIDEWALK ASSIGNMENTS

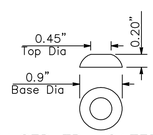


RAISED TRUNCATED DOME

RAISED TRUNCATED DOME PATTERN

See Note 3

2 DETECTABLE WARNING SURFACE

NOTES:

1. CURB RAMPS SHALL BE PROVIDED AT ALL SIDEWALK TO STREET CURB LOCATIONS. REFER TO RAMP DETAIL SHEETS.
2. CURB RAMPS SHALL BE CONSTRUCTED TO THE DIMENSIONS AND FINISHED ELEVATIONS SHOWN IN THE PLANS AND/OR CONTRACT DOCUMENTS AND SHALL ALSO CONFORM TO THE REQUIREMENTS OF THE AMERICANS WITH DISABILITIES ACT. SURFACE TEXTURE OF THE CURB RAMP SHALL BE STABLE, FIRM, AND SLIP-RESISTANT. THE SURFACE SHALL BE COARSE BROOMED FINISH TRANSVERSE TO THE SLOPE OF THE RAMP. CARE SHALL BE TAKEN TO ENSURE A UNIFORM GRADE ON THE CURB RAMP. LONGITUDINAL AND/OR TRANSVERSE JOINT MARKINGS SHALL NOT BE ALLOWED ON THE LANDINGS OR RAMPS.
3. DETECTABLE WARNINGS (I.E. TRUNCATED DOMES) SHALL BE INSTALLED ON ALL RAMPS AT STREET CURBS.
4. DRAINAGE AND/OR UTILITY STRUCTURES SHALL NOT BE PLACED IN A CURB RAMP OR LANDING. WHERE UTILITY ITEMS EXIST AT RAMP LOCATIONS, THEY SHALL BE ADJUSTED TO FIT THE RAMP REQUIREMENTS PER STANDARD DETAILS.
5. THE GUTTER LINE PROFILE OF THE STREET SHALL BE MAINTAINED THROUGH THE AREA OF THE CURB RAMP.
6. THE 6" DIMENSION IS THE MINIMUM ADDITIONAL WIDTH AND THE PAY LIMIT FOR THE COMPACTED SUBGRADE AND BASE.

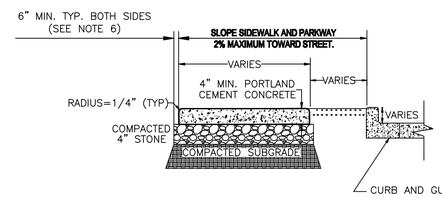


CROSS SECTION

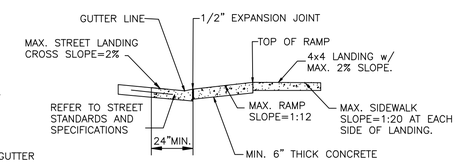


TYPICAL STREET/RAMP/LANDING PROFILE

3 TYPICAL SIDEWALK SECTIONS

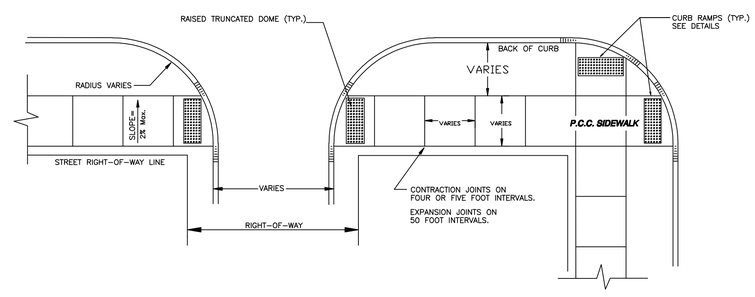


4 TYPICAL SIDEWALK LAYOUTS

| | |
|---|---|
| SURVEY BY: | -- |
| DESIGNED BY: | City of Cape |
| DRAWN BY: | DEW |
| CHECKED BY: | KG |
| SCALE: | Not to Scale UN |

| NO. | DATE | REVISIONS | BY |
|---|---|---|---|

# Standard Details for Sidewalk

(This standard is current as of March 01, 2010)

CITY OF CAPE GIRARDEAU
401 INDEPENDENCE ST.
CAPE GIRARDEAU, MO. 63702
ENGINEERING DIVISION

The Original drawing is sealed and signed by Kelly Green P.E., City Engineer, May 27, 2010.

Sidewalks

JOB NO.

FIELD BOOK

U:\Dwnd Wildcat\Wear Standard Details\100002 as Plotted for Drawer\04 100001 Sidewalk Std.dwg, Sheet 1, 6/02/2010 12:28:42 PM

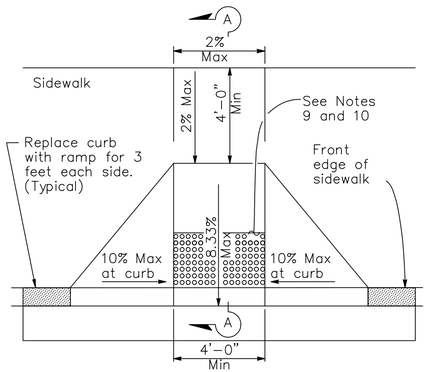


CASE A

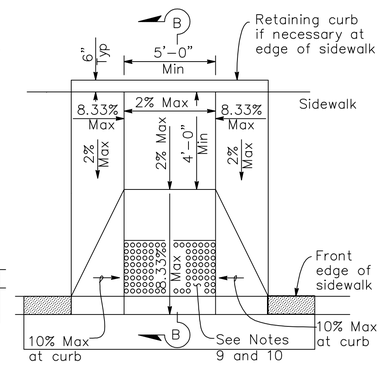


CASE B

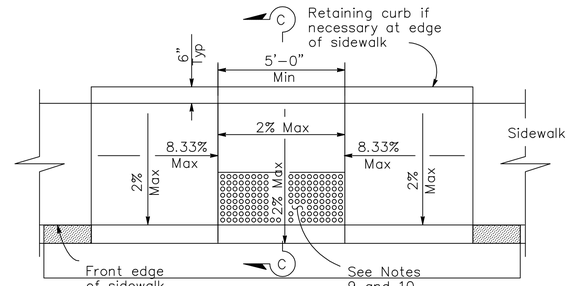


CASE C

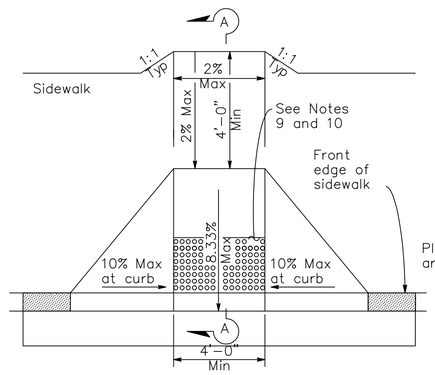


CASE D

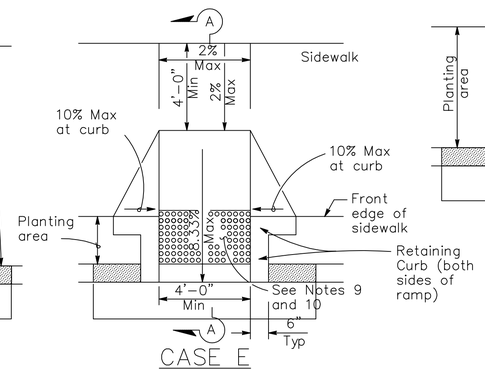


CASE E

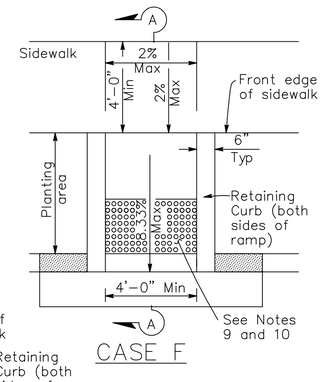


CASE F

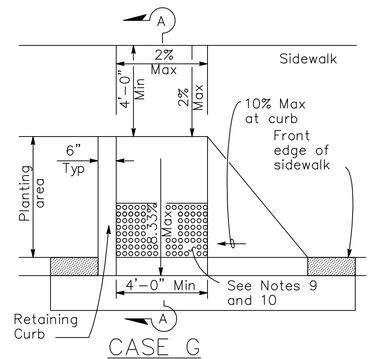


CASE G

See Note 4

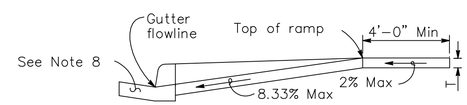


SECTION A–A

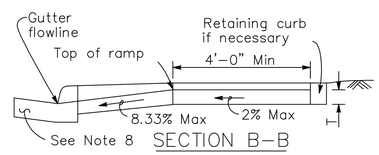


SECTION B–B

Depress entire sidewalk as required

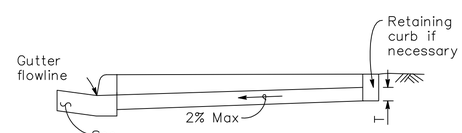


SECTION C–C

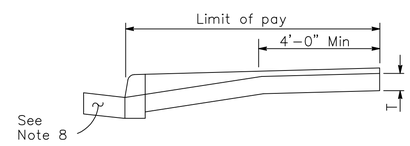


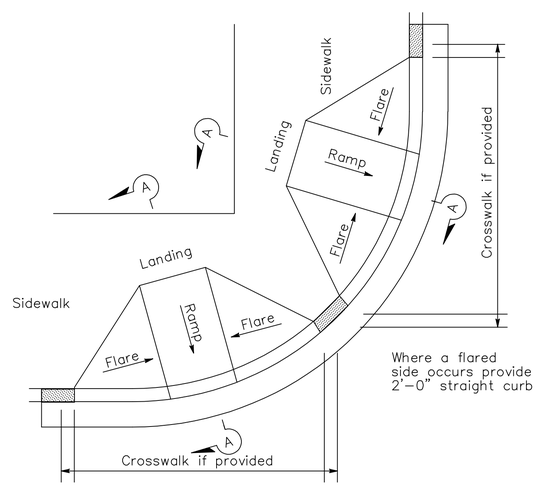


DETAIL A

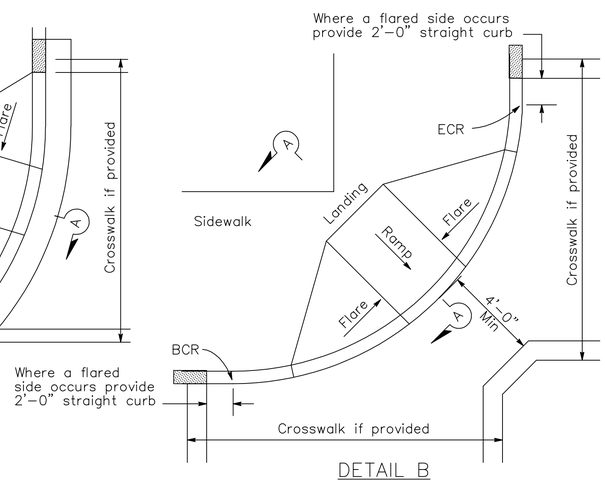


DETAIL B

1 TYPICAL TWO–RAMP CORNER INSTALLATION

See Note 1

2 TYPICAL ONE–RAMP CORNER INSTALLATION

See Note 1 and 3

NOTES:

1. As site conditions dictate, Case A through Case G curb ramps may be used for corner installations similar to those shown in Detail 1 and Detail 2. The case of curb ramps used in Detail 1 do not have to be the same. Case A through Case G curb ramps may also be rotated and/or mirrored, or used at mid block locations, as site conditions dictate.
2. If distance from curb to back of sidewalk is too short to accommodate a 5' ramp and 4' platform (landing) as shown in Case A, the sidewalk may be depressed longitudinally as in Case B, or C or may be widened as in Case D and/or the ramp made shorter than 5'. Exceptions may be shown on the plans.
3. When ramp is located in center of curb return, crosswalk configuration must be similar to that shown for Detail 2.
4. As site conditions dictate, the retaining curb side and the flared side of the Case G ramp shall be constructed in reversed position.
5. If located on a curve, the sides of the ramp need not be parallel, but the minimum width of the ramp shall be 4'–0".
6. Side slope of ramp flares vary uniformly from a maximum of 10% at curb to conform with longitudinal sidewalk slope adjacent to top of the ramp, except in Case C and Case F.
7. Transitions from ramps and landing to walks, gutters or streets shall be flush and free of abrupt changes.
8. Maximum slopes of adjoining gutters, the road surface immediately adjacent to the curb ramp or accessible route shall not exceed 5 percent within 4'–0" of the top and bottom of the curb ramp.
9. Curb ramps shall have a detectable warning surface that extends the full width and 2'–0" depth of the ramp. Detectable Warning Surfaces shall conform to the details shown on Sidewalk sheet and as specified.
10. The edge of the detectable warning surface nearest the street shall be between 6" and 8" from the gutter flowline.
11. Sidewalk and ramp thickness, "T", shall be 6" minimum.
12. All surface utilities such as pull boxes, meter boxes and manhole covers within the boundaries of the curb ramp shall be relocated or adjusted to finished grade and slope by the Contractor in conjunction with curb ramp construction.
13. Pay limits for curb ramps will be the ramp, landing, flares, street curb and gutter replacement across the width of ramp plus 3 feet each side of the flare or curb limit, sidewalk curbs where necessary, and truncated domes. All demolition, surface utility work and street filler are incidental to ramp price. Sidewalk transitions are paid as Sidewalk.

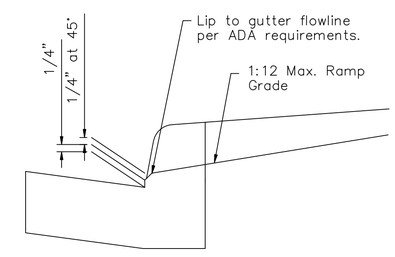


LIP Detail

(Typical at Gutter Line)

| NO. | DATE | REVISIONS | BY |
|---|---|---|---|
| | | | |

SURVEY BY: --
DESIGNED BY: City of Cape
DRAWN BY: DEW
CHECKED BY: KG
SCALE: Not to Scale UN

# Standard Details for Sidewalk Ramps

SHEET 1 OF 2

(This standard is current as of March 01, 2010)

CITY OF CAPE GIRARDEAU
401 INDEPENDENCE ST.
CAPE GIRARDEAU, MO. 63702
ENGINEERING DIVISION

The Original drawing is sealed and signed by Kelly Green P.E., City Engineer, May 27, 2010.

Sidewalk Ramps 1 of 2

JOB NO.
FIELD BOOK

U:\Dwnd Wildfire\Wee Standard Details\100002 as Plotted for Drawing\03 100001 Ramp Details 1.dwg, Layout1, 6/02/010 12:30:30 PM

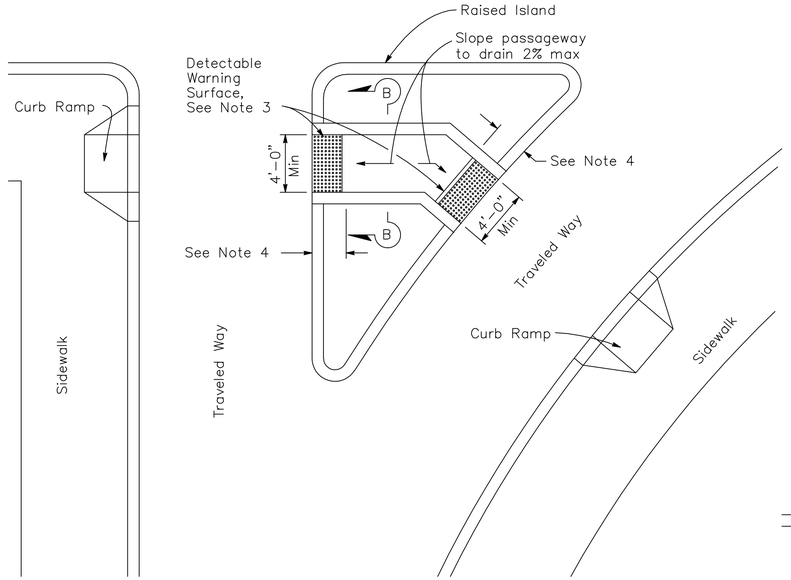


2 ISLAND PASSAGEWAY, Type B

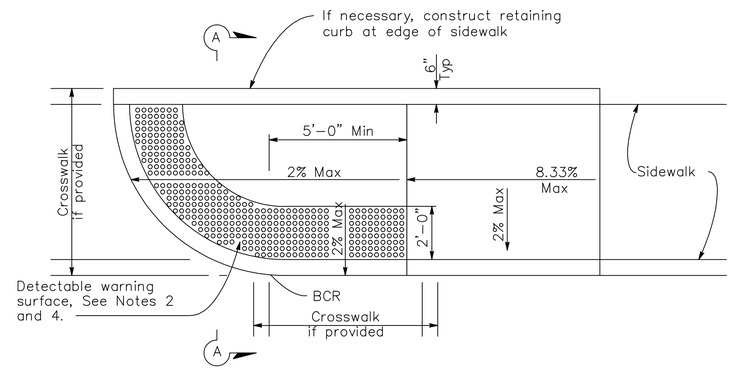


4 DETECTABLE WARNING, CASE LC

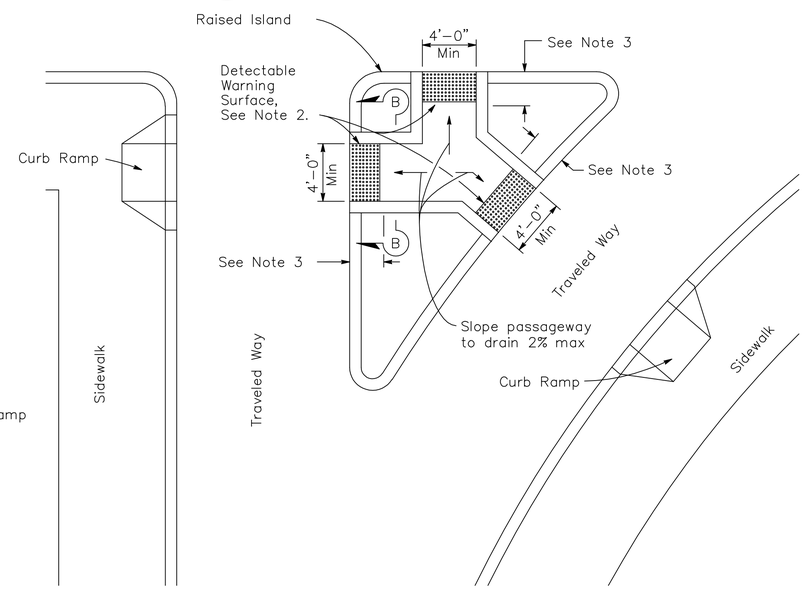


3 ISLAND PASSAGEWAY, Type C

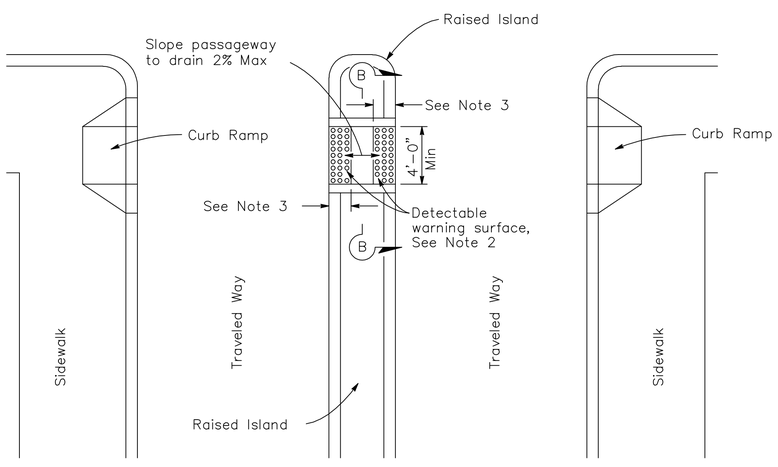


1 ISLAND PASSAGEWAY, Type A

## NOTES:

1. Sidewalk, ramp and passageway thickness, "T", shall be 6" minimum.
2. For details of detectable warning surfaces, see Sidewalk detail sheet.
3. Where an island passageway length is less than 6'–0", the detectable warning surface shall extend the full width and full depth of the passage way length. Where an island passage way length is greater than or equal to 6'–0", but less than 8'–0", each detectable warning surface shall extend the full width and 2'–0" depth of the passage way length. Where an island passage way length is greater than or equal to 8'–0", each detectable warning surface shall extend the full width and 2'–0" depth of the passage way length.
4. For Case LC curb ramp, the edge of the detectable warning surface nearest the street shall be between 6" and 8" from the gutter flowline.
5. Transitions from ramps to walks, gutters or streets shall be flush and free of abrupt changes.
6. Maximum slopes of adjoining gutters, the road surface immediately adjacent to the curb ramp or accessible route shall not exceed 5 percent within 4'–0" of the top and bottom of the curb ramp.
7. All surface utilities such as pull boxes, meter boxes and manhole covers within the boundaries of the curb ramp shall be relocated or adjusted to finished grade and slope by the Contractor in conjunction with curb ramp construction. See Ramp Details 1 for Pay Limits.

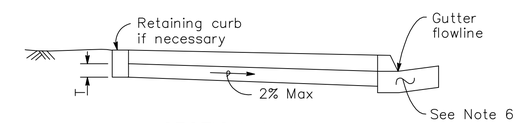


SECTION A–A

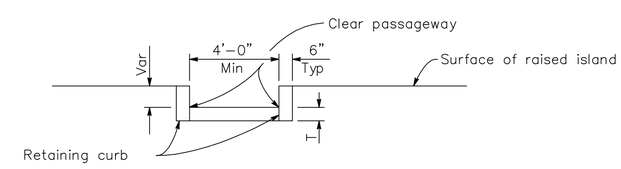


SECTION B–B

SURVEY BY: --
DESIGNED BY: City of Cape
DRAWN BY: DEW
CHECKED BY: KG
SCALE: Not to Scale UN

| NO. | DATE | REVISIONS | BY |
|---|---|---|---|

# Standard Details for Sidewalk Ramps

SHEET 2 OF 2

(This standard is current as of March 01, 2010)

CITY OF CAPE GIRARDEAU
401 INDEPENDENCE ST.
CAPE GIRARDEAU, MO. 63702
ENGINEERING DIVISION

The Original drawing is sealed and signed by Kelly Green P.E., City Engineer, May 27, 2010.

Sidewalk Ramps 2 of 2

JOB NO.
FIELD BOOK

U:\Data\Wastewater\Standard Details\102002 as Plotted for Drawer\09 100301 Ramp Details 2.dwg, Layout4, 6/20/2010 12:21:21 PM

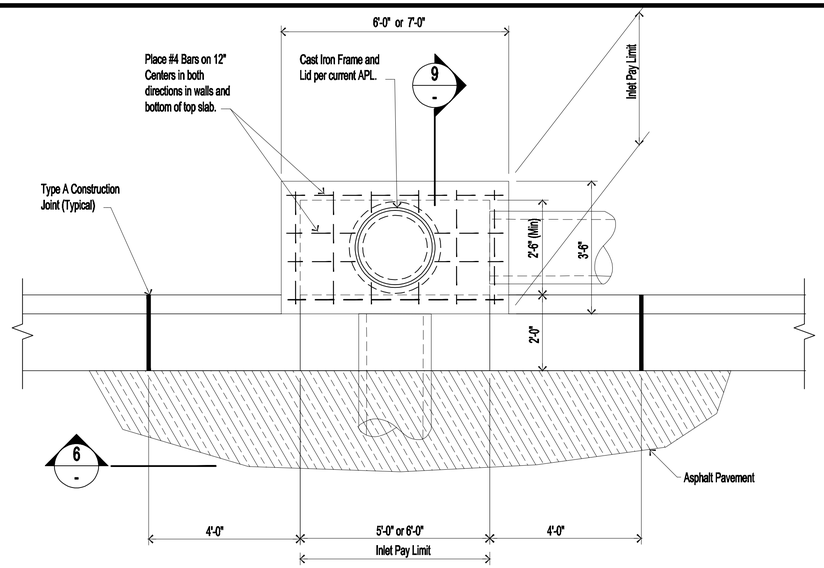


1 Plan at Inlet, Asphalt Pavement with 6" Curb
Scale : 1/2"= 1'-0"

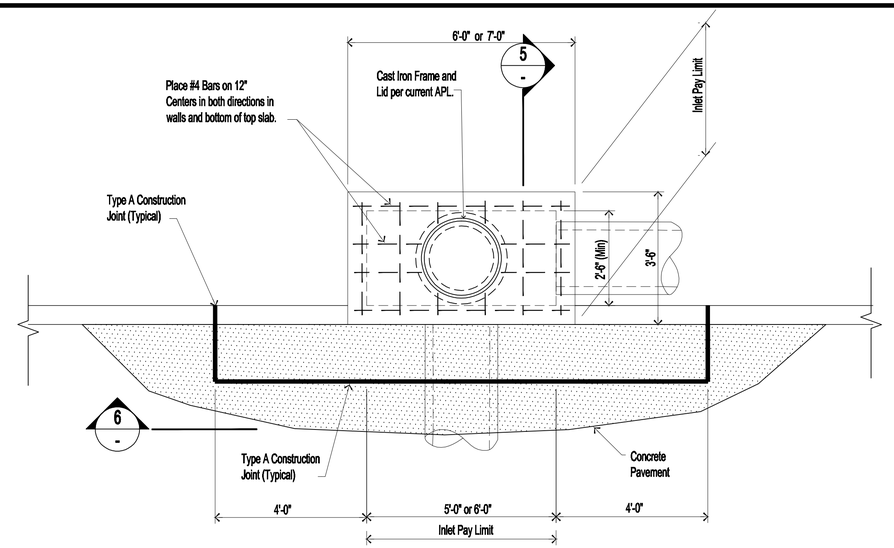


2 Plan at Inlet, Concrete Pavement with 6" Curb
Scale : 1/2"= 1'-0"

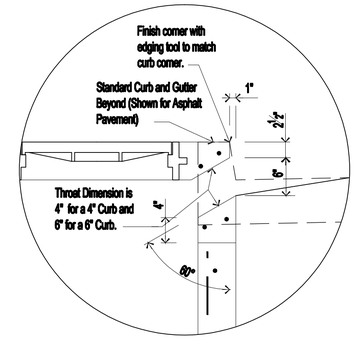


3 Weir Detail
Scale : 1"= 1'-0"

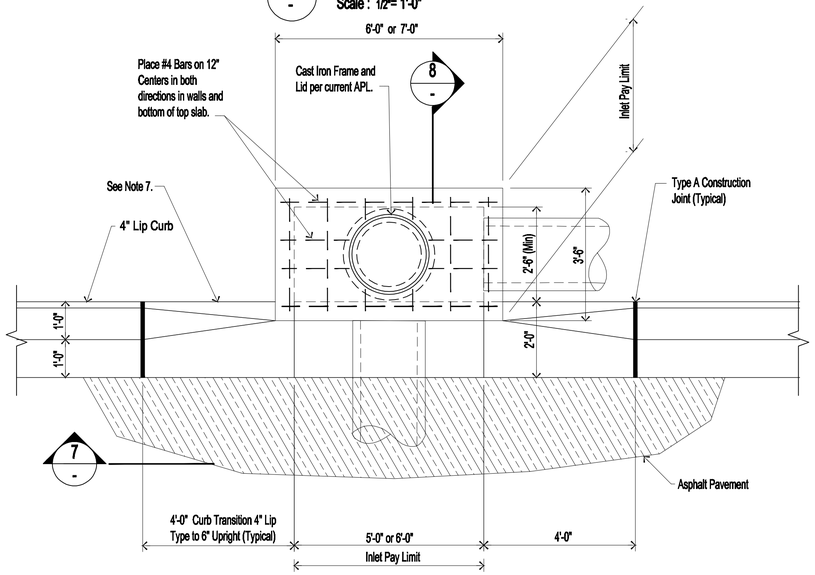


4 Plan at Inlet, Asphalt Pavement with 4" Lip Curb
Scale : 1/2"= 1'-0"

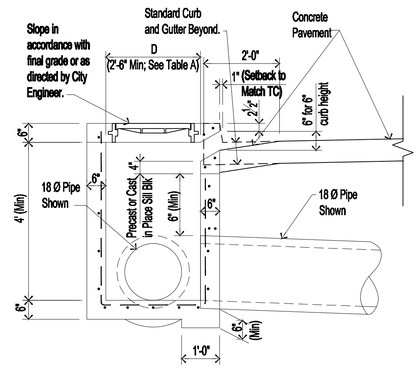


5 Section
Scale : 1/2"= 1'-0"

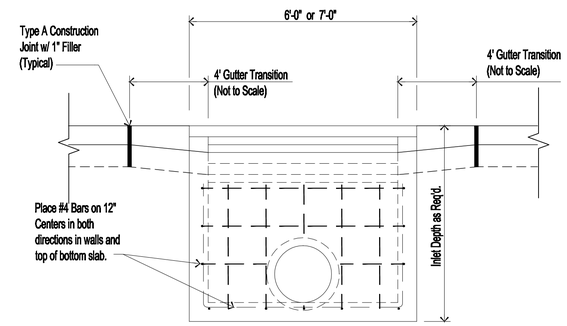


6 Elevation
Scale : 1/2"= 1'-0"

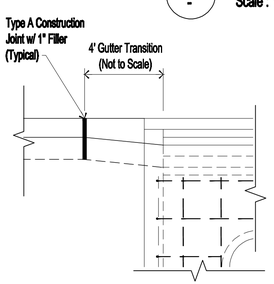


7 Elevation
Scale : 1/2"= 1'-0"

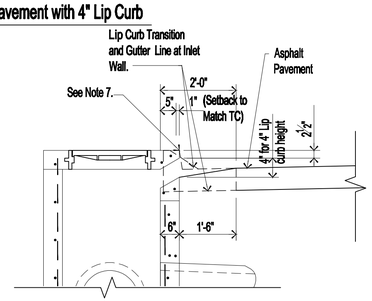


8 Section
Scale : 1/2"= 1'-0"

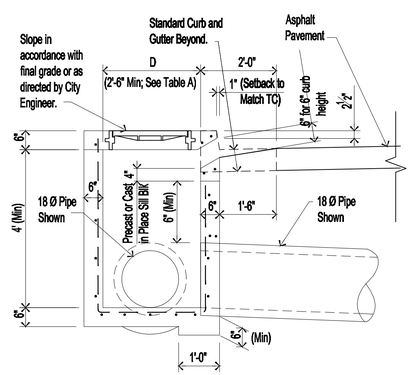


9 Section
Scale : 1/2"= 1'-0"

| TABLE A | | |
|---|---|---|
| No. | Pipe Dia. | D |
| A | 18" and LESS | 2'-6" |
| B | 21" and 24" | 3'-0" |
| C | 27" and 30" | 3'-7" |
| D | 33" and 36" | 4'-2" |
| E | 42" | 4'-9" |
| F | 48" | 5'-0" |
| G | 54" | 6'-1" |

Notes :

1. Inlets shall be designed to intercept the gutter flow capacity according to the latest edition of the Illinois Department of Transportation Drainage Manual, Chapter 8. The Manual is available at www.dot.il.gov/bridges/brmanuals. Inlets shall be constructed according to the plan location and the details shown on this sheet.
2. All Inlet pay limit concrete shall be 5000psi minimum in 28 days.
3. Set front edge of inlet top one inch back to match the top of the curb. Depress gutter flow line at inlet 2 1/2" below normal gutter flow line. Construct flow line transition in 4 feet each side of inlet. Pipes shall be connected to inlet walls where shown on the plan.
4. Curb inlets shall be paid for at the price bid for 6' or 7' Curb Inlet. Price shall include concrete, reinforcement, cast iron frame and lid, steps, joint filler and complete with excavation, installation and backfill, regardless of the "D" dimension in Table A.
5. Inlets may be precast when prior approval is obtained from City Engineer.
6. Cast iron frame and lid (and steps where required) shall be per current APL.
7. Top of 4-inch curb and inlet are at profile grade. Face of 4-inch curb transition to 6-inch upright curb and inlet setback of one inch are aligned.

SURVEY BY: --
DESIGNED BY: City of Cape
DRAWN BY: DEW
CHECKED BY: KG
SCALE: Not to Scale UN

| NO. | DATE | REVISIONS | BY |
|---|---|---|---|

# Standard Details for Curb Inlet

(This standard is current as of March 01, 2010)


CITY OF CAPE GIRARDEAU
401 INDEPENDENCE ST.
CAPE GIRARDEAU, MO. 63702
ENGINEERING DIVISION


The Original drawing is sealed and signed by Kelly Green P.E., City Engineer, May 27, 2010.

Curb Inlet

JOB NO.
FIELD BOOK

U:\Devel Within\New Standard Details\100802 as Plotted for Danner\07 100301 Curb Inlet Std.dwg, set for 22x34, 6/02/10 1:09:23 PM

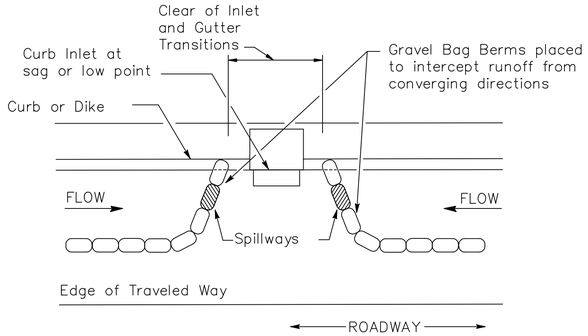


PLAN

## 2 CONFIGURATION FOR SAG POINT INLET, Type 1B (GRAVEL BAG BERM)

### GRAVEL BAG BERM (TYPE 1A) SPACING TABLE

| SLOPE OF ROADWAY (PERCENT) | 1 to 3.9 | 4 to 5.9 | 6 to 7.9 | 8 to 10 | 10+ |
|---|---|---|---|---|---|
| MAXIMUM INTERVAL BETWEEN BERMS | 100' | 75' | 50' | 25' | 12' |

For slope of less than 1%, install barriers If erosion/sediment is prevalent, subject to the approval of the inspector.

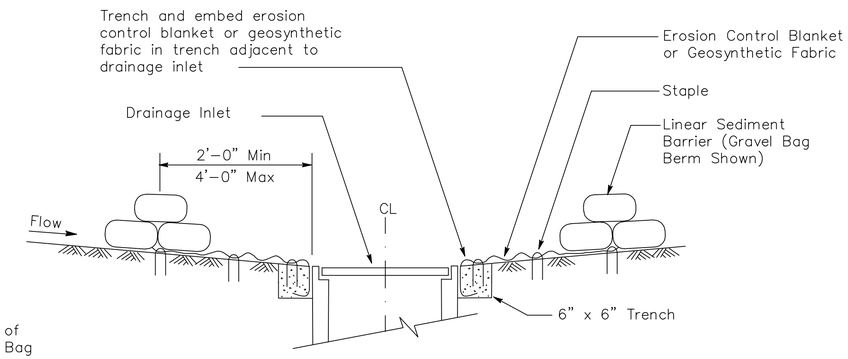


SECTION A-A

### NOTES:

1. Place safety cones adjacent to drainage inlet protection.
2. Dimensions may vary to fit field conditions.
3. Install a minimum of 3 gravel bag berms upstream of each drainage inlet to be protected.
4. Position erosion control blanket or geosynthetic fabric at edge of concrete apron and secure in trench.
5. Erosion control blanket or geosynthetic fabric is not required if the area adjacent to the drainage inlet is vegetated or paved.

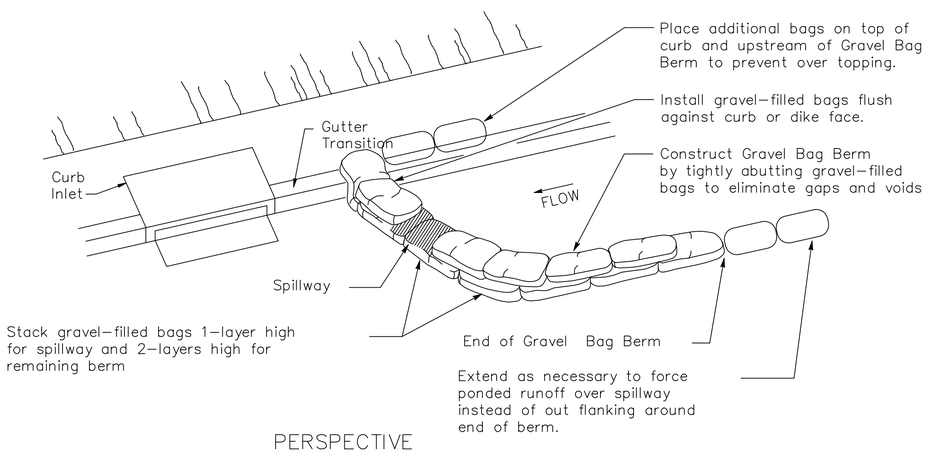


PERSPECTIVE

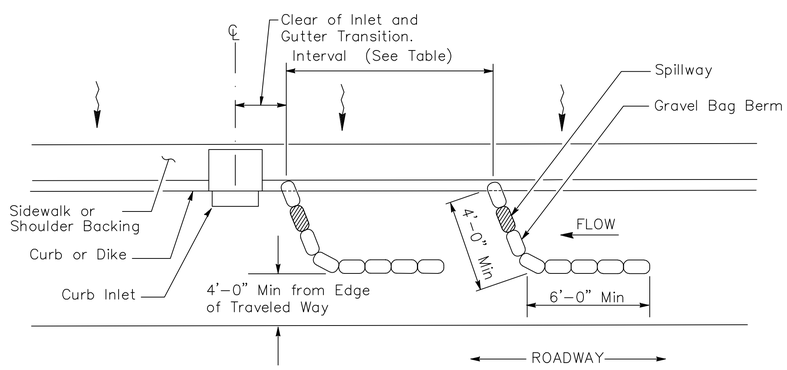


PLAN

## 1 CONFIGURATION FOR INLET ON GRADE, Type 1A (GRAVEL BAG BERM)

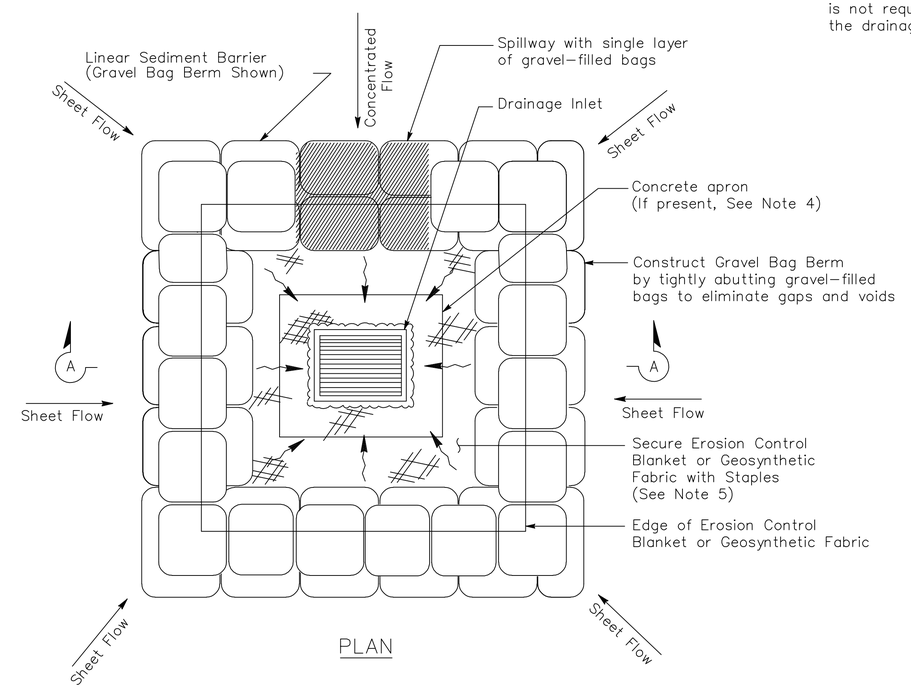


PLAN

## 3 CONFIGURATION FOR AREA INLET, Type 1C (GRAVEL BAG BERM)

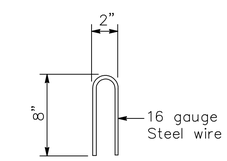


STAPLE DETAIL

SURVEY BY: --
DESIGNED BY: City of Cape
DRAWN BY: DEW
CHECKED BY: KG
SCALE: Not to Scale UN

| NO. | DATE | REVISIONS | BY |
|---|---|---|---|

# Standard Details for Inlet Protection, Type 1

(This standard is current as of March 01, 2010)

CITY OF CAPE GIRARDEAU
401 INDEPENDENCE ST.
CAPE GIRARDEAU, MO. 63702
ENGINEERING DIVISION

The Original drawing is sealed and signed by Kelly Green P.E., City Engineer, May 27, 2010.

JOB NO.
FIELD BOOK

Inlet Protection, Type 1

U:\Dwnd Wildlife\Wee Standard Details\100002 as Plotted for Drawer\06 100001 Inlet Protection Type 1.dwg, Layout1, 6/02/2010 1:01:55 PM

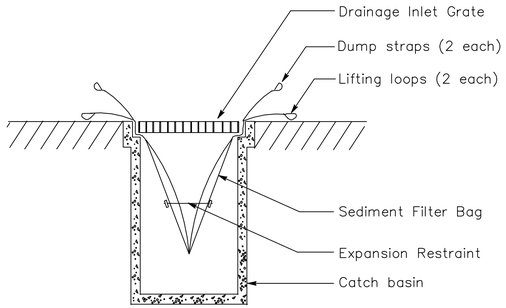


SECTION B–B

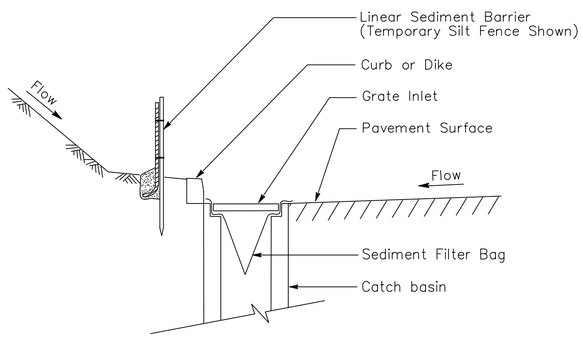


SECTION A–A

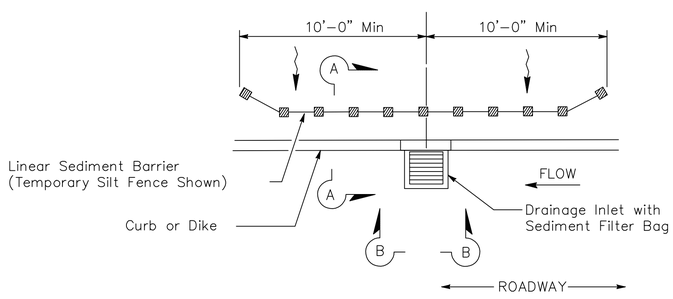


PLAN

1 CONFIGURATION FOR GRATED INLET, TYPE 2A (LINEAR BARRIER WITH SEDIMENT BAG; See Note 3.)

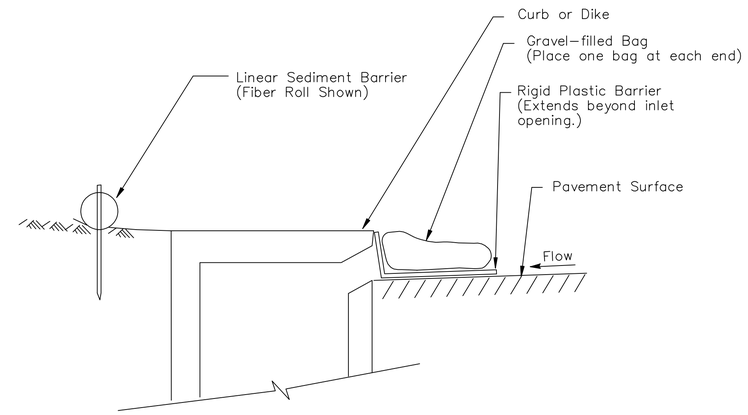


SECTION

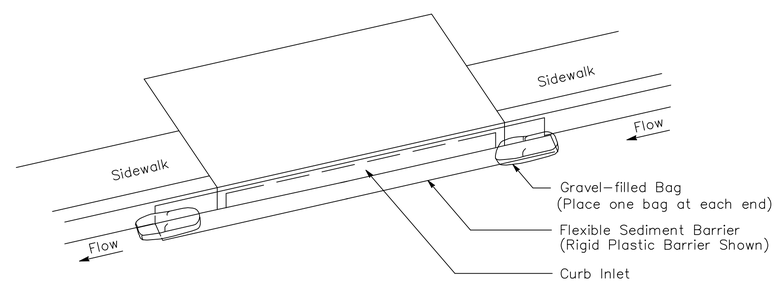


PERSPECTIVE

2 CONFIGURATION FOR CURB INLET DIVERSION, TYPE 2B (LINEAR BARRIER WITH DIVERSION; SEE NOTE 4.)

NOTES:

1. Dimensions may vary to fit field conditions.
2. Inlet diversion can only be used with approval of the Engineer. Additional Type 1 devices shall be used in conjunction with approved inlet diversions.
3. Inlet bag may be used with or without the Linear Barrier, subject to approval by the Engineer.
4. Inlet diversion may be used with or without the Linear Barrier, subject to approval of the Engineer.

SURVEY BY: --
DESIGNED BY: City of Cape
DRAWN BY: DEW
CHECKED BY: KG
SCALE: Not to Scale UN

| NO. | DATE | REVISIONS | BY |
|---|---|---|---|

# Standard Details for Inlet Protection, Type 2

(This standard is current as of March 01, 2010)

CITY OF CAPE GIRARDEAU
401 INDEPENDENCE ST.
CAPE GIRARDEAU, MO. 63702
ENGINEERING DIVISION

The Original drawing is sealed and signed by Kelly Green P.E., City Engineer, May 27, 2010.

JOB NO.
FIELD BOOK

Inlet Protection, Type 2

U:\David Webber\New Standard Details\100302 as Plotted for Drawer\09 100301 Inlet Protection Type 2.dwg, Layout1, 6/3/2010 1:03:11 PM

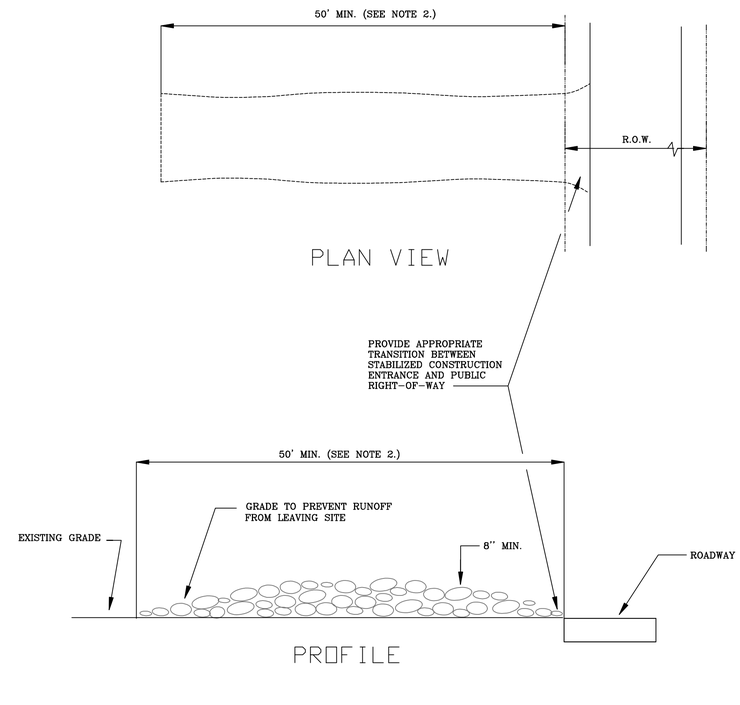


NOTES:

1. STONE SIZE: AS REQUIRED TO BE EFFECTIVE BUT NOT LESS THAN 3"-5" MINIMUM OPEN GRADED ROCK.
2. LENGTH: AS REQUIRED TO BE EFFECTIVE BUT NOT LESS THAN 50'.
3. THICKNESS: NOT LESS THAN 8".
4. WIDTH: NOT LESS THAN FULL WIDTH OF ALL POINTS OF INGRESS/EGRESS.
5. WASHING: WHEN NECESSARY, VEHICLE WHEELS SHALL BE CLEANED TO REMOVE SEDIMENT PRIOR TO ENTRANCE ONTO PUBLIC RIGHT-OF-WAY. WHEN WASHING IS REQUIRED, IT SHALL BE DONE ON AN AREA STABILIZED WITH CRUSHED STONE AND THAT DRAINS INTO AN APPROVED TRAP OR SEDIMENT BASIN. ALL SEDIMENT SHALL BE PREVENTED FROM ENTERING ANY STORM DRAIN, DITCH OR WATERCOURSE USING APPROVED METHODS.
6. MAINTENANCE: THE ENTRANCE SHALL BE MAINTAINED IN A CONDITION THAT WILL PREVENT TRACKING OR FLOWING OF SEDIMENT ONTO PUBLIC RIGHT-OF-WAY. THIS MAY REQUIRE PERIODIC TOP DRESSING WITH ADDITIONAL STONE AS CONDITIONS DEMAND, AS WELL AS REPAIR AND CLEAN OUT OF ANY ASSOCIATED SEDIMENT REMOVAL DEVICES. ALL SEDIMENT THAT IS SPILLED, DROPPED, WASHED OR TRACKED ONTO PUBLIC RIGHT-OF-WAY MUST BE REMOVED IMMEDIATELY.
7. DRAINAGE: ENTRANCE MUST BE PROPERLY GRADED OR INCORPORATE A DRAINAGE SWALE TO PREVENT RUNOFF FROM LEAVING THE CONSTRUCTION SITE.

SURVEY BY: --
DESIGNED BY: City of Cape
DRAWN BY: DEW
CHECKED BY: KG
SCALE: Not to Scale UN

| NO. | DATE | REVISIONS | BY |
|---|---|---|---|

# Standard Details for Construction Entrance

(This standard is current as of March 01, 2010)

CITY OF CAPE GIRARDEAU
401 INDEPENDENCE ST.
CAPE GIRARDEAU, MO. 63702
ENGINEERING DIVISION

The Original drawing is sealed and signed by Kelly Green P.E., City Engineer, May 27, 2010.

Temp Const Ent

JOB NO.
FIELD BOOK

L:\Cad\ Wildcat\New Standard Details\100302 as Plotted for Dawne\10 100301 Construction Entrance 8-1-9-1.dwg, Layout1, 6/28/2010 1:54:11 PM

| TYPE | ROCK DITCH LINER MIN. THICKNESS | BEDDING MATERIAL MIN. THICKNESS |
|---|---|---|
| 1 | 8" | -- |
| 2 | 12" | -- |
| 3 | 22" | 8" |
| 4 | 30" | 12" |

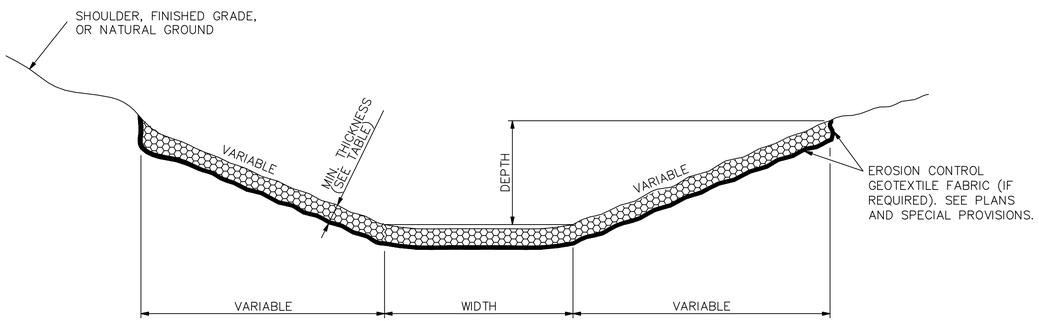


FLAT BOTTOM DITCH
WITHOUT BEDDING MATERIAL

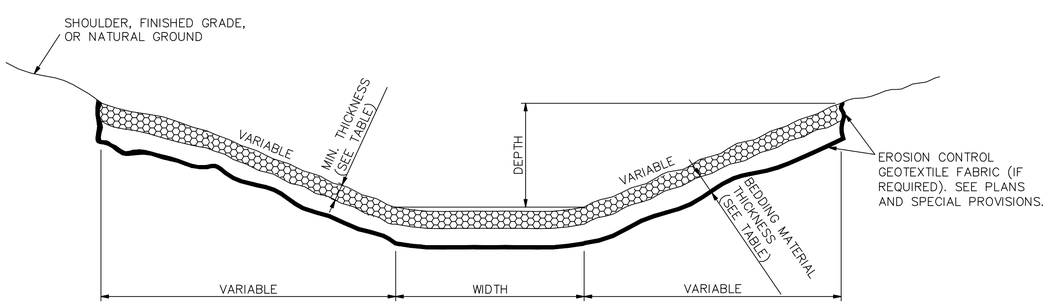


FLAT BOTTOM DITCH
WITH BEDDING MATERIAL

GENERAL NOTES:
1. MATERIAL SHALL BE ROCK LINER, TYPE AS SHOWN ON THE PLANS. SEE CITY SPEC SECTION 304.

**TYPICAL DITCH LINER DETAILS**
MoDOT 609.60C

| ROCK LINING FOR CULVERT OUTLETS | | | | | |
|---|---|---|---|---|---|
| CULVERT SIZE, DIA (IN.) | MINIMUM DEPTH AND WIDTH (FT.) | MINIMUM LENGHT (FT.) | ROCK LINING (CU.YD.) | EQUIVALENT PIPE ARCH CULVERT (APPROX.) | EQUIVALENT CONCRETE BOX CULVERT (APPROX.) |
| 18 | 1 X 4 | 12 | 2 | | |
| 24 | 1 X 6 | 14 | 3 | | 2' X 1?' |
| 30 | 1 X 7 | 16 | 4 | B-5 | 2' X 2' |
| 36 | 1.5 X 9 | 18 | 9 | B-6 | 3' X 2' |
| 42 | 2 X 10 | 20 | 15 | B-7 | 3' X 3' |
| 48 | 2 X 12 | 20 | 18 | B-8 | 4' X 3' |
| 54 | 2 X 13.5 | 22 | 22 | B-9 | 4' X 4' |
| 60 | 2 X 15 | 25 | 28 | B-10 | 5' X 4' |
| 66 | 2 X 18 | 25 | 33 | B-11 | 5' X 5' |
| 72 | 2 X 20 | 30 | 44 | B-12 | 5' X 6' |
| 84 | 2.5 X 25 | 35 | 81 | | 6' X 6' |
| 96 | 2.5 X 30 | 40 | 111 | | 7' X 7' |
| 108 | 3 X 32 | 40 | 142 | | 8' X 8' |

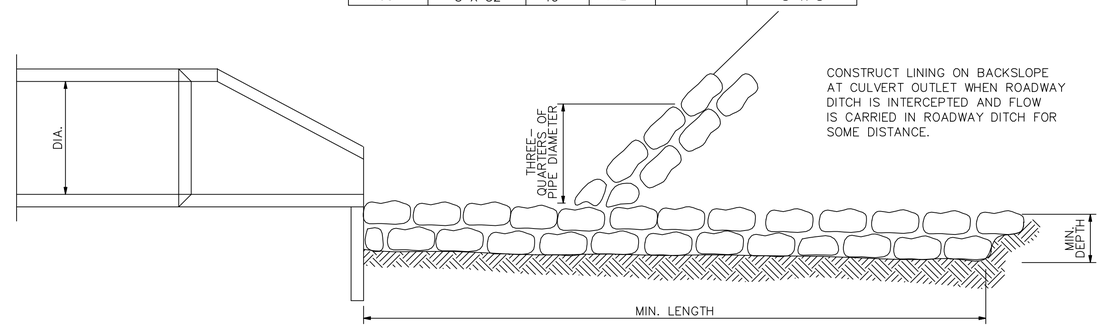


SIDE VIEW

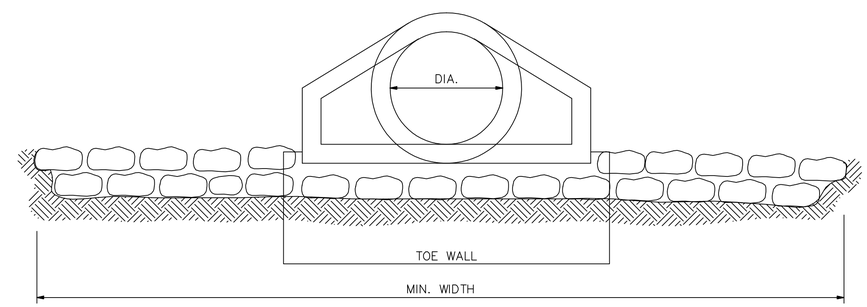


END VIEW

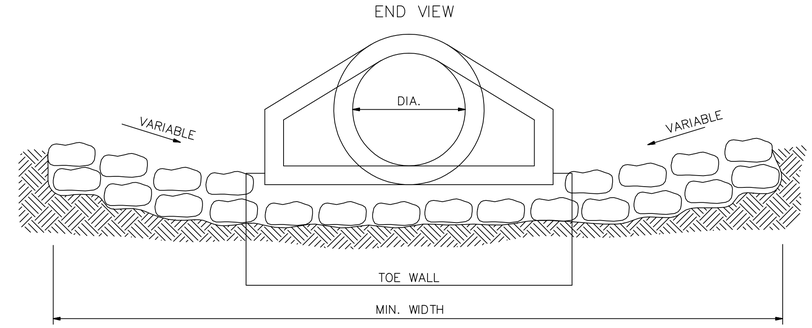


END VIEW
(ALTERNATE METHOD)

GENERAL NOTES:
1. THE DIMENSIONS SHOWN IN THE TABLE CAN BE APPLIED TO BOX OR ARCH CULVERTS OF EQUIVALENT WATERWAY AREA.
2. MATERIAL SHALL BE ROCK BLANKET, TYPE II PER CITY SPEC SECTION 305.

**TYPICAL ROCK LINING DETAILS**
MoDOT 609.70C

SURVEY BY: --
DESIGNED BY: City of Cape
DRAWN BY: DEW
CHECKED BY: KG
SCALE: Not to Scale UN

| NO. | DATE | REVISIONS | BY |
|---|---|---|---|

# Standard Details for Ditch Liner and Rock Lining

(This standard is current as of March 01, 2010)

CITY OF CAPE GIRARDEAU
401 INDEPENDENCE ST.
CAPE GIRARDEAU, MO. 63702
ENGINEERING DIVISION

The Original drawing is sealed and signed by Kelly Green P.E., City Engineer, May 27, 2010.

Ditch Liner & Rock Lining

JOB NO.
FIELD BOOK

U:\Dwg\ Wildwater\New Standard Details\100302 as Plotted for Dianne\11 100301 Ditch Liner and Rock Lining MoDOT.dwg, 609.60C & 609.70C, 6/30/2010 1:52:40 PM

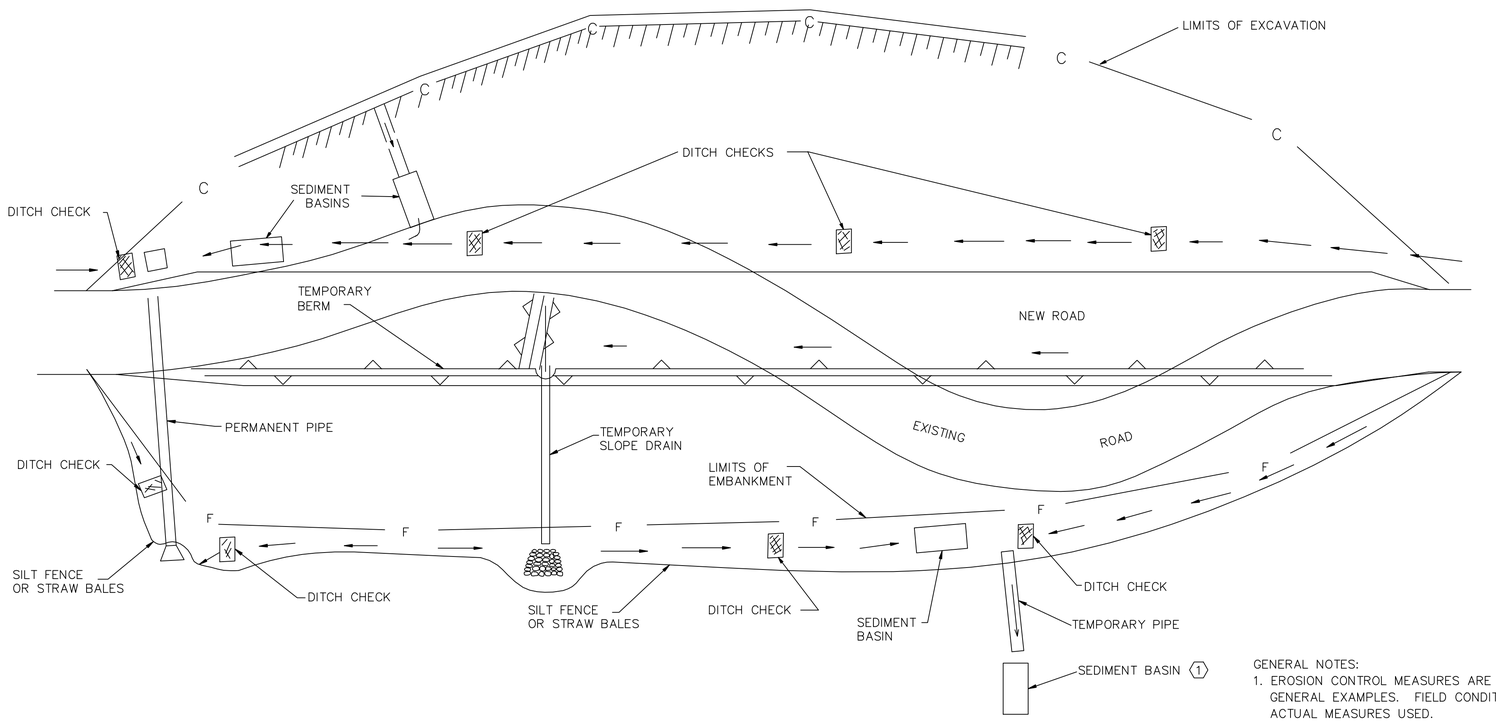


GENERAL NOTES:

1. EROSION CONTROL MEASURES ARE SHOWN HERE AS GENERAL EXAMPLES. FIELD CONDITIONS WILL DICTATE ACTUAL MEASURES USED.
2. TEMPORARY OR FINAL SEEDING IMMEDIATELY UPON COMPLETION OF GRADING.
3. WOOD POSTS SHALL BE USED FOR ALL STRAW BALE APPLICATIONS.
4. STRAW BALES USED AS SILT FENCE SHALL BE EMBEDDED 6 INCHES.

LEGEND

C = CUT LIMITS

F = FILL LIMITS

← = DIRECTION OF FLOW

KEYED NOTES:

1 IF DITCH CHECK IS USED, TOP OF DITCH CHECK MUST BE AT OR LOWER THAN PIPE FLOW LINE.

**TEMPORARY EROSION CONTROL MEASURES**

MoDOT 606.10H, sheet 1 of 7

SURVEY BY: --
DESIGNED BY: City of Cape
DRAWN BY: DEW
CHECKED BY: KG
SCALE: Not to Scale UN

| NO. | DATE | REVISIONS | BY |
|---|---|---|---|

# Standard Details for Temporary Erosion Controls

**Sheet 1 of 7**

(This standard is current as of March 01, 2010)

CITY OF CAPE GIRARDEAU
401 INDEPENDENCE ST.
CAPE GIRARDEAU, MO. 63702
ENGINEERING DIVISION

The Original drawing is sealed and signed by Kelly Green P.E., City Engineer, May 27, 2010.

Er. Controls, 1 of 7

JOB NO.

FIELD BOOK

L:\Cities\Whitewater\New Standard Details\100302 as Plotted for Dawn\12 Rev 18 100301 Er Cont.pwr MoDOT 606.10H.dwg, 606.10H Pl, 6/02/2010 1:09:05 PM

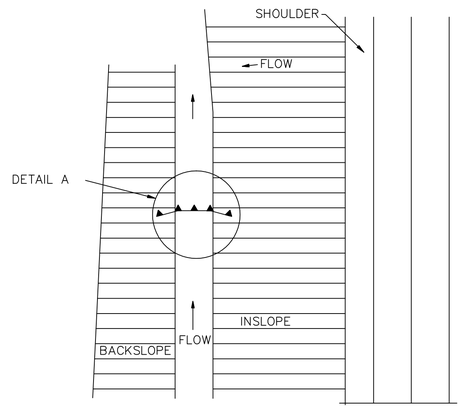


PLAN VIEW

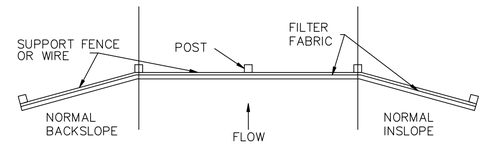


PLAN VIEW
DETAIL A

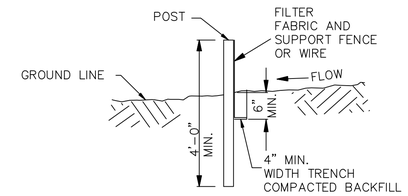


SECTION B–B

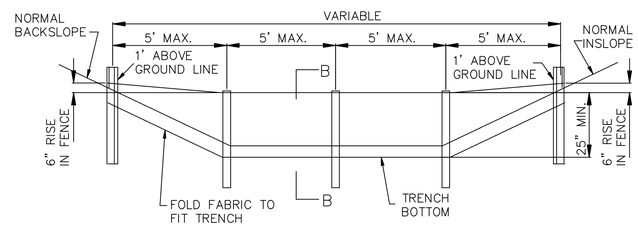


ELEVATION DETAIL

GEOTEXTILE FABRIC DITCH CHECK

NOTES:

SUPPORT FENCE SHALL BE PROVIDED WITH GEOTEXTILE FABRIC DITCH CHECK.

POST SHALL BE STEEL T–POST OR EQUIVALENT.

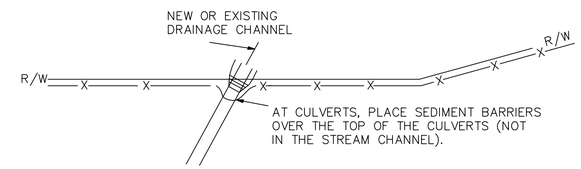


LOCATION DETAIL

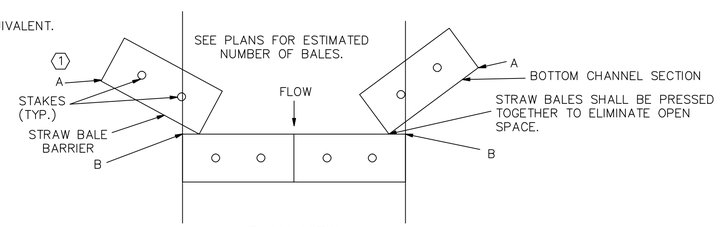


PLAN VIEW
DITCH APPLICATION DETAILS

KEYED NOTES:

1. CORNERS 'A' SHALL BE HIGHER THAN CORNERS 'B' TO ENSURE FLOW THROUGH OR OVER BARRIER, NOT AROUND IT.

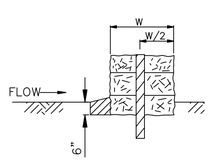


SECTION A–A

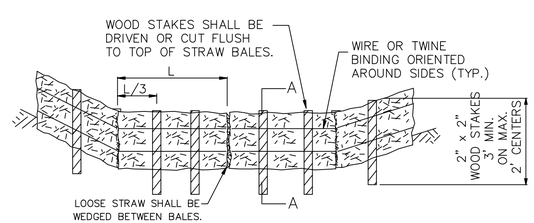


ELEVATION DETAIL

STRAW BALE DITCH CHECK

GENERAL NOTES:

1. REFER TO MoDOT SECTION 806.30 FOR TYPE I DITCH CHECK.
2. SEE SHEET 3 FOR MINIMUM SPACING OF ALL DITCH CHECK TYPES.
3. THE TYPE I DITCH CHECK USING GEOTEXTILE FABRIC AND/OR STRAW BALES MAY BE REMOVED, AS DIRECTED BY THE ENGINEER, WHEN THE VEGETATION HAS SUFFICIENTLY MATURED TO PROTECT THE DITCH OR SWALE, OR THE CONCRETE DITCH LINER HAS BEEN CONSTRUCTED.
4. DRIVE SUPPORT STAKES TO HALF THEIR LENGTH.

**TEMPORARY EROSION CONTROL MEASURES**

MoDOT 606.10H, sheet 2 of 7

SURVEY BY: --
DESIGNED BY: City of Cape
DRAWN BY: DEW
CHECKED BY: KG
SCALE: Not to Scale UN

| NO. | DATE | REVISIONS | BY |
|---|---|---|---|

# Standard Details for Temporary Erosion Controls

**Sheet 2 of 7**

(This standard is current as of March 01, 2010)


CITY OF CAPE GIRARDEAU
401 INDEPENDENCE ST.
CAPE GIRARDEAU, MO. 63702
ENGINEERING DIVISION


The Original drawing is sealed and signed by Kelly Green P.E., City Engineer, May 27, 2010.

Er. Controls, 2 of 7

JOB NO.
FIELD BOOK

U:\Dwnld Wildlife\New Standard Details\103002 as Plotted for Drawer\12 Rev 18 100301 SI Cost per MoDOT 606.10H.dwg, 606.10H 02, 6/3/2010 2:05:16 PM

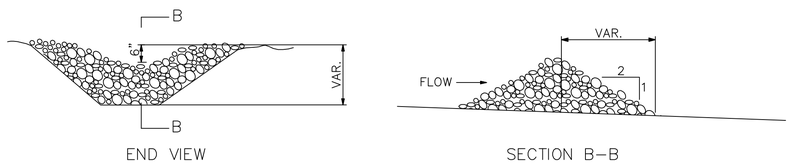


END VIEW SECTION B–B

SEDIMENT TRAP

| EXAMPLE DITCH CHECK SPACING FOR STANDARD HEIGHTS (FT.) | | |
|---|---|---|
| DITCH SLOPE % | SPACING FOR 24" HEIGHT | SPACING FOR 18" HEIGHT |
| 0.5 | 400 | 300 |
| 1.0 | 200 | 150 |
| 1.5 | 133 | 100 |
| 2.0 | 100 | 75 |
| 2.5 | 80 | 60 |
| 3.0 | 66 | 50 |
| 3.5 | 57 | 43 |
| 4.0 | 50 | 38 |
| 4.5 | 44 | 33 |
| 5.0 | 40 | 30 |
| 5.5 | 38 | 27 |
| 6.0 | 35 | 25 |
| 6.5 | 30 | 23 |
| 7.0 | 28 | 21 |
| 7.5 | 26 | 20 |
| 8.0 | 25 | 19 |
| 8.5 | 23 | 18 |
| 9.0 | 22 | 17 |
| 9.5 | 21 | 16 |
| 10.0 | 20 | 15 |

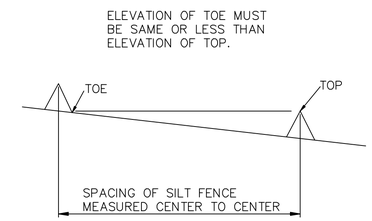


MINIMUM DITCH CHECK SPACING

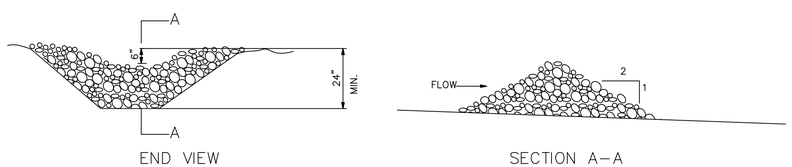


END VIEW SECTION A–A

ROCK DITCH CHECK

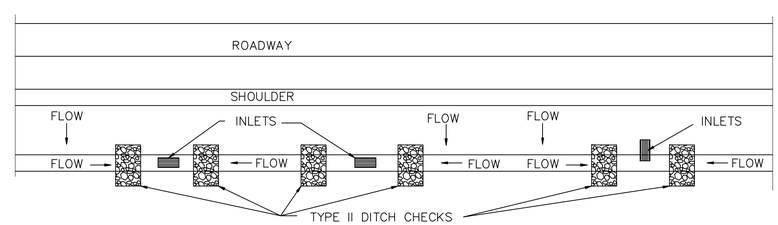


NOTE:

1. TYPE II DITCH CHECK IN THE CLEAR ZONE SHALL BE REMOVED AFTER THE VEGETATION HAS SUFFICIENTLY MATURED TO PROTECT THE DITCH OR SWALE, AS DETERMINED BY THE ENGINEER, OR THE CONCRETE DITCH LINER HAS BEEN CONSTRUCTED.

TEMPORARY ROCK DITCH CHECK, TYPE II

NOTES:

1. THE DROP INLET CHECK SHALL PROVIDE A MINIMUM OF 12 INCHES AND A MAXIMUM OF 18 INCHES OF HEIGHT ABOVE THE INLET GRADE.

DROP INLET CHECK

GENERAL NOTES:

1. REFER TO CITY SPEC SECTION 307 FOR TYPE II DITCH CHECK.

**TEMPORARY EROSION CONTROL MEASURES**

MoDOT 606.10H, sheet 3 of 7

SURVEY BY: --
DESIGNED BY: City of Cape
DRAWN BY: DEW
CHECKED BY: KG
SCALE: Not to Scale UN

| NO. | DATE | REVISIONS | BY |
|---|---|---|---|

# Standard Details for Temporary Erosion Controls

**Sheet 3 of 7**

(This standard is current as of March 01, 2010)

CITY OF CAPE GIRARDEAU
401 INDEPENDENCE ST.
CAPE GIRARDEAU, MO. 63702
ENGINEERING DIVISION

The Original drawing is sealed and signed by Kelly Green P.E., City Engineer, May 27, 2010.

Er. Controls, 3 of 7

JOB NO.
FIELD BOOK

L:\Cityfiles\Webster\New Standard Details\100302 as Plotted for Dwnwrd\12 Rev 18 100301 Er Cont.pwr MoDOT 606.10H.dwg, 606.10H (6), 05/20/10 2:01:39 PM

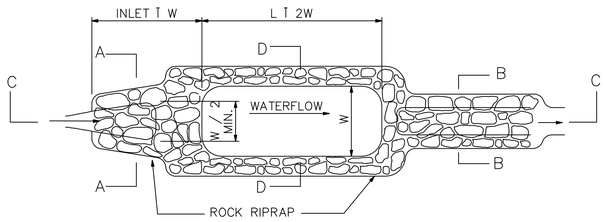


PLAN VIEW

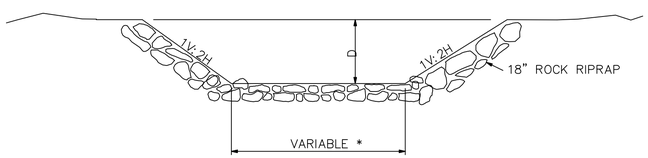


SECTION A–A
INLET

D = 1.0' + DESIGN FLOW DEPTH–MIN.
* VARIES FROM WIDTH OF STREAM AT INLET TO ONE–HALF WIDTH OF POND AT OUTLET.

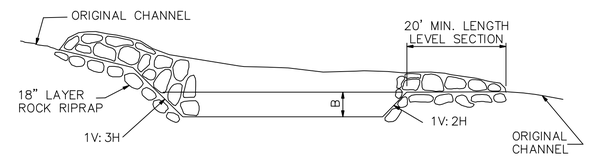


EFFECTIVE DEPTH "B" = MIN. 2', MAX. 6' DEPENDENT UPON CONFIGURATION REQUIRED BY LOCATION AND ESTIMATED VOLUME.

SECTION C–C

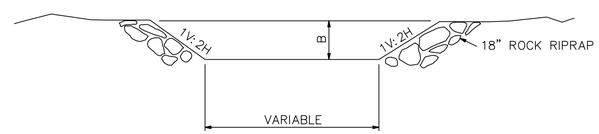


SECTION D–D

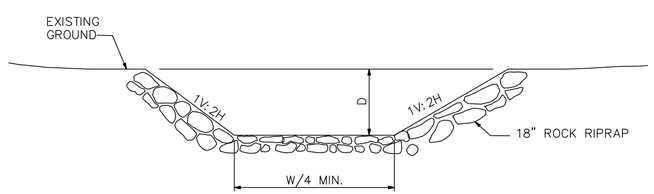


SECTION B–B
OUTLET

GENERAL NOTES:

THE MATERIALS FOR ROCK RIPRAP SHALL MEET THE REQUIREMENTS OF CITY SPEC SECTION 305 FOR TYPE 2 ROCK BLANKET.

SEE PLANS FOR LENGTH, DEPTH AND WIDTH OF BASIN.

**TEMPORARY EROSION CONTROL MEASURES**

MoDOT 606.10H, sheet 4 of 7

SURVEY BY: --
DESIGNED BY: City of Cape
DRAWN BY: DEW
CHECKED BY: KG
SCALE: Not to Scale UN

| NO. | DATE | REVISIONS | BY |
|---|---|---|---|

# Standard Details for Temporary Erosion Controls

**Sheet 4 of 7**

(This standard is current as of March 01, 2010)

CITY OF CAPE GIRARDEAU
401 INDEPENDENCE ST.
CAPE GIRARDEAU, MO. 63702
ENGINEERING DIVISION

The Original drawing is sealed and signed by Kelly Green P.E., City Engineer, May 27, 2010.

Er. Controls, 4 of 7

JOB NO.
FIELD BOOK

U:\Shared Wildlife\New Standard Details\103002 as Plotted for Drawer\12 Rev 18 100301 Et Cost per MoDOT 606.10H.dwg, 606.10H.04, 6/3/2010 2:52:26 PM

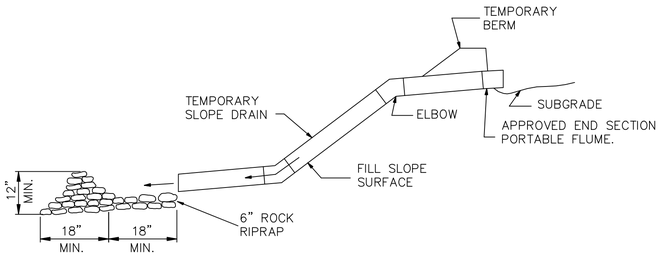


NOTE:

IN SOME CASES IT MAY BE NECESSARY TO EMBED METAL OR PLASTIC PIPE INTO THE FILL SLOPE TO SECURE PROPER ANCHORAGE.

SECTION A–A

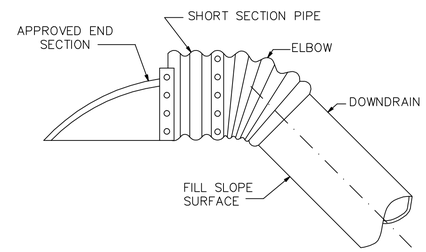


INLET TREATMENT

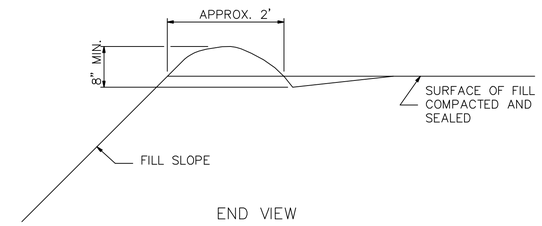


END VIEW

TYPE 'A' TEMPORARY BERM

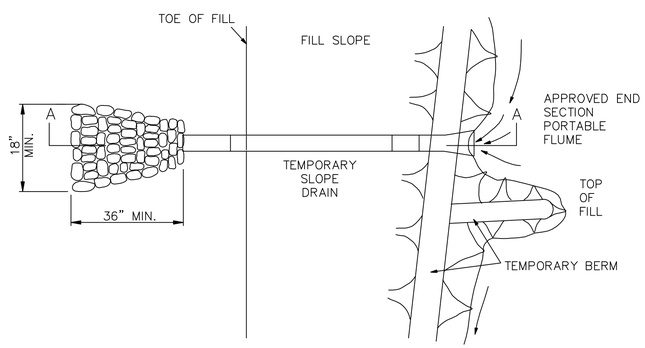


PLAN VIEW

TEMPORARY SLOPE DRAIN

(METAL, FLEXIBLE RUBBER OR PLASTIC PIPE)

NOTE:
MAXIMUM LENGTH BETWEEN SLOPE DRAINS SHALL BE APPROXIMATELY 500 FEET.

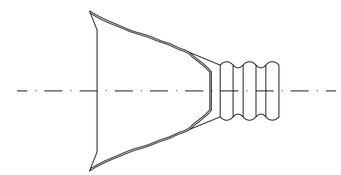

PLAN VIEW END SECTION

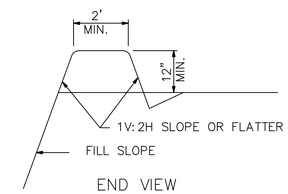


END VIEW
FILL BERM

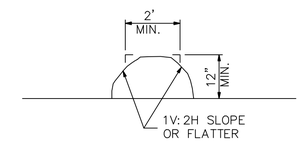


END VIEW
TRANSVERSE BERM

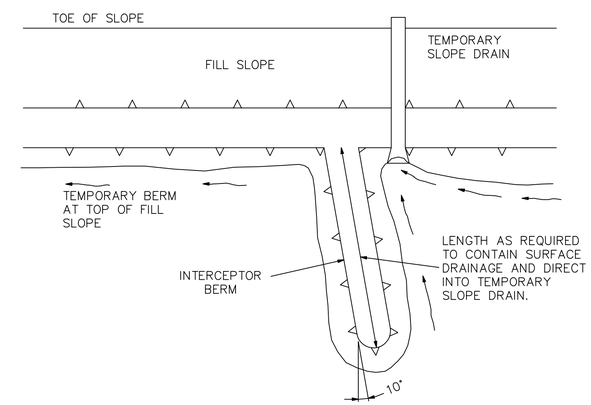


PLAN VIEW

TYPE 'B' TEMPORARY BERM

**TEMPORARY EROSION CONTROL MEASURES**

MoDOT 606.10H, sheet 5 of 7

SURVEY BY: --
DESIGNED BY: City of Cape
DRAWN BY: DEW
CHECKED BY: KG
SCALE: Not to Scale UN

| NO. | DATE | REVISIONS | BY |
|---|---|---|---|

# Standard Details for Temporary Erosion Controls

**Sheet 5 of 7**

(This standard is current as of March 01, 2010)

CITY OF CAPE GIRARDEAU
401 INDEPENDENCE ST.
CAPE GIRARDEAU, MO. 63702
ENGINEERING DIVISION

The Original drawing is sealed and signed by Kelly Green P.E., City Engineer, May 27, 2010.

Er. Controls, 5 of 7

JOB NO.
FIELD BOOK

U:\Devel Whitener\New Standard Details\100802 as Plotted for Dsnsw\12.0mx 19.1002001 Er Cntrl per MoDOT 606.10H.dwg, 606.10H.06, 6/02/2010 2:05:29 PM

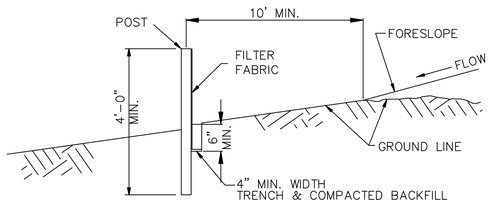


TYPICAL B–B

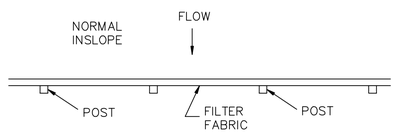


PLAN VIEW
DETAIL A

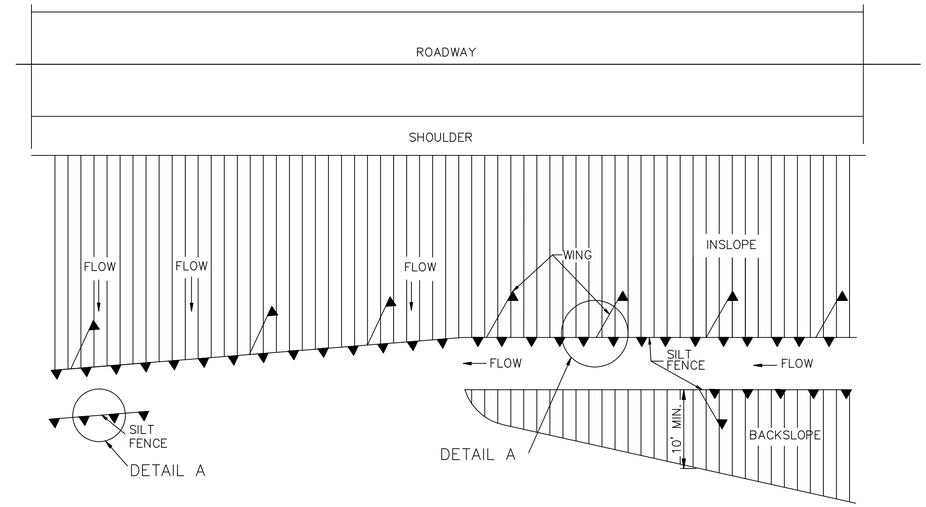


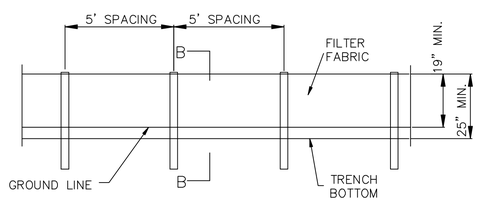


ELEVATION DETAIL

FABRIC SILT FENCE

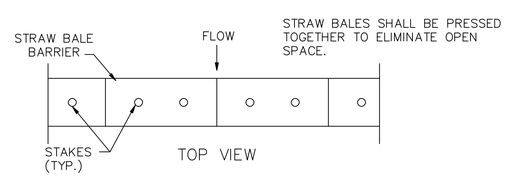


TOP VIEW

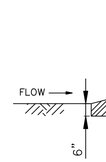


SECTION A–A

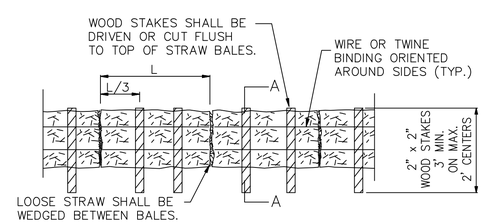


SIDE VIEW DETAIL

STRAW BALE SILT FENCE

GENERAL NOTES:

1. SILT FENCES SHALL BE IN ACCORDANCE WITH MoDOT SECTION 806.70.
2. USE SILT FENCE FOR FILL HEIGHTS GREATER OR EQUAL TO 10 FEET. ON ALL FILLS GREATER THAN 10 FEET HIGH, MID–SLOPE RUNS OF SILT FENCE SHOULD BE CONSIDERED.
3. FOR FABRIC SILT FENCE, THE MINIMUM LONGITUDINAL SPLICE OVERLAP SHALL BE 2' WITH A POST AT EACH END. THE FABRIC SHALL BE SECURED TO POSTS.
4. INSTEAD OF SILT FENCE ACROSS DRAINAGE DITCHES AND DRAINS, DITCH CHECK SHALL BE USED AS SHOWN ON PLANS OR AS DIRECTED BY ENGINEER.
5. SILT FENCE WING SPACING APPROXIMATELY TWICE DITCH CHECK SPACING.
6. DRIVE SUPPORT STAKES TO HALF OF THEIR LENGTH.

**TEMPORARY EROSION CONTROL MEASURES**

MoDOT 606.10H, sheet 6 of 7

SURVEY BY: --
DESIGNED BY: City of Cape
DRAWN BY: DEW
CHECKED BY: KG
SCALE: Not to Scale UN

| NO. | DATE | REVISIONS | BY |
|---|---|---|---|

# Standard Details for Temporary Erosion Controls

**Sheet 6 of 7**

(This standard is current as of March 01, 2010)

CITY OF CAPE GIRARDEAU
401 INDEPENDENCE ST.
CAPE GIRARDEAU, MO. 63702
ENGINEERING DIVISION

The Original drawing is sealed and signed by Kelly Green P.E., City Engineer, May 27, 2010.

Er. Controls, 6 of 7

JOB NO.
FIELD BOOK

L:\Cloud Whitaker\New Standard Details\100302 as Plotted for Dissent\12 Rev 18 100301 Er Cont.pwr MoDOT 606.10H.dwg, 606.10H (B), 05/20/10 2:04:46 PM

SECTION B–B ③

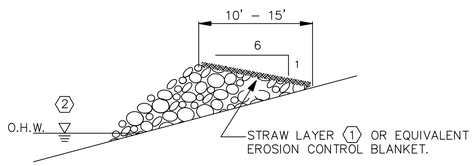


SECTION A–A
TYPE C BERM ③

KEYED NOTES:

① STRAW LAYER SHALL BE A THICKNESS OF 2" COMPACTED.

② TYPE C BERM SHALL BE PLACED NO LOWER THAN THE ORDINARY HIGH WATER (O.H.W.) OR AT AN ELEVATION AS DIRECTED BY THE ENGINEER.

③ TYPE C BERM SHALL BE BUILT TO HANDLE SIGNIFICANT RUNOFF EVENTS AND SHALL BE INSTALLED PRIOR TO SOIL DISTURBANCE OR PLACEMENT OF FILL IN THE DRAINAGE AREA OF THE BERM.

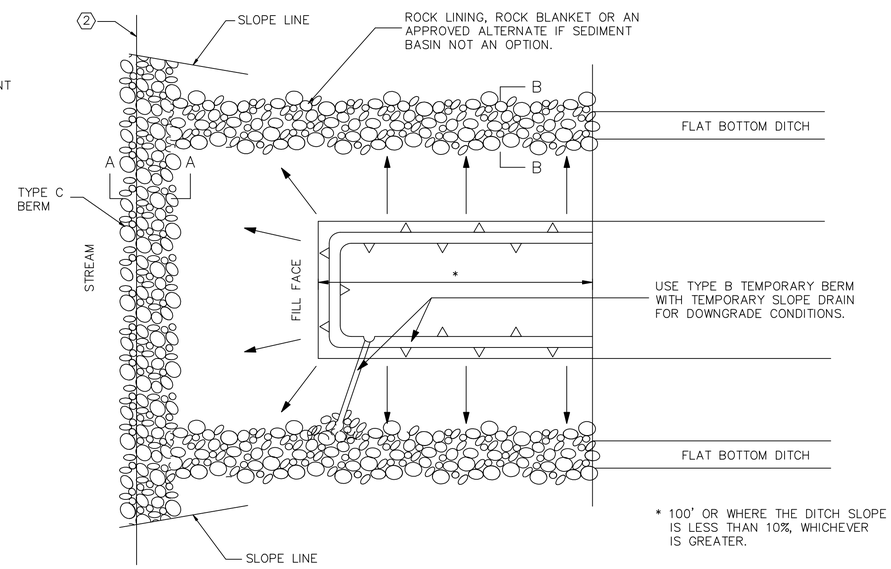


PLAN VIEW

NOTE:

1. MATERIAL SHALL BE ROCK LINER, TYPE AS SHOWN ON THE PLANS. SEE CITY SPEC SECTION 304.

TEMPORARY ROCK SEDIMENT BASIN

**TEMPORARY EROSION CONTROL MEASURES**

MoDOT 606.10H, sheet 7 of 7

SURVEY BY: --
DESIGNED BY: City of Cape
DRAWN BY: DEW
CHECKED BY: KG
SCALE: Not to Scale UN

| NO. | DATE | REVISIONS | BY |
|---|---|---|---|

# Standard Details for Temporary Erosion Controls

**Sheet 7 of 7**

(This standard is current as of March 01, 2010)


CITY OF CAPE GIRARDEAU
401 INDEPENDENCE ST.
CAPE GIRARDEAU, MO. 63702
ENGINEERING DIVISION


The Original drawing is sealed and signed by Kelly Green P.E., City Engineer, May 27, 2010.

Er. Controls, 7 of 7

JOB NO.
FIELD BOOK


L:\Chuck Whitaker\New Standard Details\100302 as Plotted for Drawer\12 Rev 18 100301 Er Cont per MoDOT 606.10H.dwg, 606.10H.07, 6/5/2010 2:05:27 PM

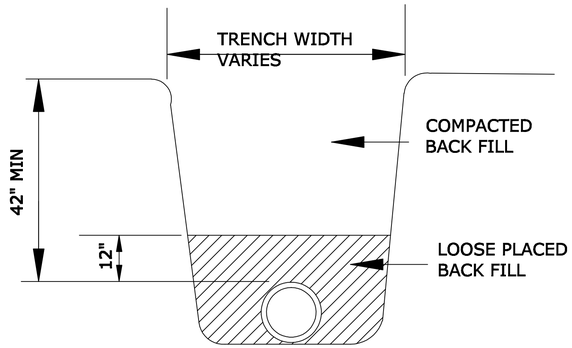


DUCTILE IRON (DI), POLYVINYL CHLORIDE (PVC),
HIGH DENSITY POLYETHYLENE PIPE (HDPE)
PRESSURE PIPE

NOTE: BEDDING FOR DI, PVC AND HDPE PRESSURE PIPE TO BE FLAT BOTTOM TRENCH, BACK FILL AS SHOWN (EXCEPT FOR SPECIAL BACK FILL AREAS DESIGNATED BY SPECIFICATIONS. I.E. DRIVEWAYS, STREETS, SIDEWALKS, ETC.)

## PRESSURE PIPE BEDDING

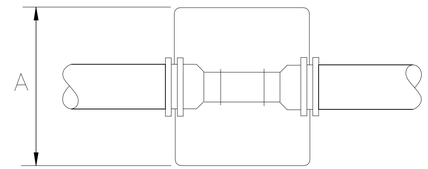


DIMENSION "A"

| DIA\BEND | 45° | 90° | TEE |
|---|---|---|---|
| 6" | 18" | 20" | 22" |
| 8" | 20" | 30" | 30" |
| 10" | 30" | 45" | 45" |
| 12" | 36" | 59" | 59" |
| 18" | 52" | 70" | 70" |

TIE DOWNS
6"–10"ø #4 REBAR
12"–18"ø #5 REBAR

PLAN

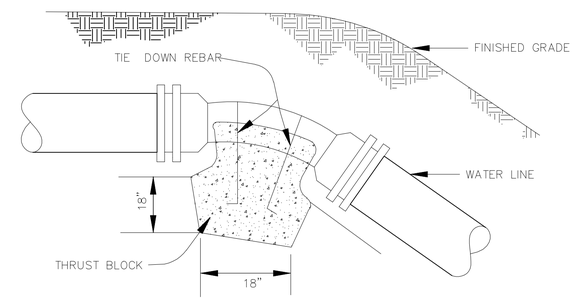


NOTE:
THRUST BLOCK TO BE POURED AGAINST UNDISTURBED EARTH. COAT ALL EXPOSED BARS WITH BITUMINOUS PAINT.

ELEVATION

## VERTICAL BEND THRUST BLOCK DETAILS

## THRUST BLOCKS DIMENSIONS

| 90° BEND | | | | | | | |
|---|---|---|---|---|---|---|---|
| SIZE | 2" | 4" | 6" | 8" | 10" | 12" | 18" |
| A | 16" | 16" | 26" | 33" | 40" | 50" | 70" |
| B | 16" | 16" | 24" | 33" | 40" | 50" | 70" |
| C | 9" | 9" | 12" | 12" | 15" | 16" | 22" |
| D | 8" | 8" | 12" | 16" | 20" | 25" | 24" |

| 45° BEND | | | | | | | |
|---|---|---|---|---|---|---|---|
| SIZE | 2" | 4" | 6" | 8" | 10" | 12" | 18" |
| A | 12" | 12" | 18" | 24" | 31" | 37" | 52" |
| B | 12" | 12" | 18" | 24" | 31" | 37" | 52" |
| C | 8" | 8" | 10" | 12" | 14" | 16" | 14" |
| D | 6" | 6" | 9" | 12" | 15" | 18" | 18" |

| 22 1/2° BEND | | | | | | | |
|---|---|---|---|---|---|---|---|
| SIZE | 2" | 4" | 6" | 8" | 10" | 12" | 18" |
| A | 9" | 9" | 13" | 18" | 23" | 26" | 40" |
| B | 9" | 9" | 13" | 18" | 23" | 26" | 40" |
| C | 8" | 8" | 10" | 12" | 14" | 16" | 15" |
| D | 4" | 4" | 6" | 9" | 11" | 13" | 16" |

| 11 1/4° BEND | | | | | | | |
|---|---|---|---|---|---|---|---|
| SIZE | 2" | 4" | 6" | 8" | 10" | 12" | 18" |
| A | 9" | 9" | 11" | 13" | 16" | 18" | 30" |
| B | 9" | 9" | 11" | 13" | 16" | 18" | 30" |
| C | 8" | 8" | 10" | 12" | 14" | 16" | 15" |
| D | 4" | 4" | 5" | 6" | 8" | 9" | 16" |

| TEE | | | | | | | | |
|---|---|---|---|---|---|---|---|---|
| SIZE | MAIN | 2"-6" | 8"-12" | 8"-10" | 12" | 12" | 12" | 18" |
| | BRANCH | 2"-6" | 2"-6" | 8"-10" | 2"-6" | 8"-10" | 12" | 16"-18" |
| A | | 26" | 26" | 43" | 26" | 43" | 52" | 70" |
| B | | 26" | 26" | 43" | 26" | 43" | 52" | 70" |
| C | | 12" | 12" | 12" | 12" | 12" | 12" | 30" |
| D | | 13" | 13" | 21" | 13" | 21" | 26" | 24" |

| PLUG/STRADDLE | | | | | | | |
|---|---|---|---|---|---|---|---|
| SIZE | 2" | 4" | 6" | 8" | 10" | 12" | 18" |
| A | 26" | 26" | 26" | 34" | 43" | 52" | 70" |
| B | 26" | 26" | 26" | 34" | 43" | 52" | 70" |
| C | 12" | 12" | 12" | 12" | 12" | 12" | 30" |
| D | 11" | 11" | 11" | 15" | 22" | 32" | 32" |

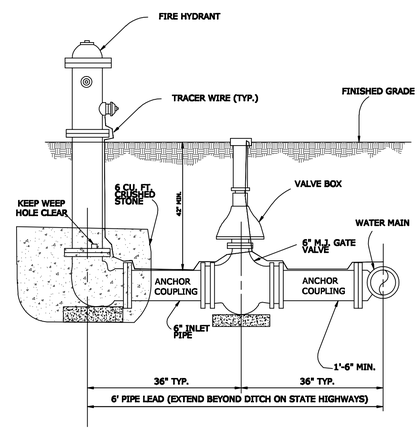


## FIRE HYDRANT INSTALLATION

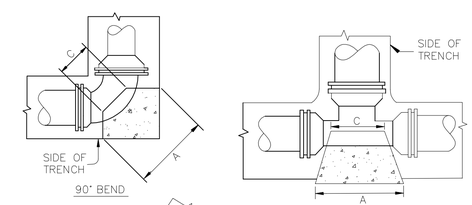


90° BEND

TEE

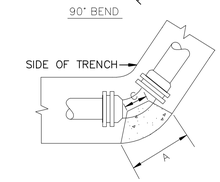


45°–22 1/2°–11 1/4° BENDS

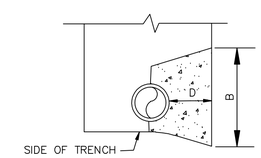


TYPICAL SECTION

**NOTES:**

**THRUST BLOCKS TO BE POURED AGAINST UNDISTURBED EARTH.**

**CONCRETE TO BE 3000 PSI 28 DAY STRENGTH**

**PIPE JOINTS SHALL REMAIN ACCESSIBLE.**

SURVEY BY: ---
DESIGNED BY: City of Cape
DRAWN BY: DEW
CHECKED BY: KG
SCALE: Not to Scale UN

| NO. | DATE | REVISIONS | BY |
|---|---|---|---|

# Standard Details for Water

Sheet 1 of 2

(This standard is current as of March 01, 2010)

CITY OF CAPE GIRARDEAU
401 INDEPENDENCE ST.
CAPE GIRARDEAU, MO. 63702
ENGINEERING DIVISION

The Original drawing is sealed and signed by Kelly Green P.E., City Engineer, May 27, 2010.

Water 1 of 2

JOB NO.
FIELD BOOK

U:\Shared Utilities\Water Standard Details\100802 as Plotted for Channel19 and 20 100301 Water Std 1 and 2.dwg, Water 1 of 2, 6/30/2010 2:26:11 PM

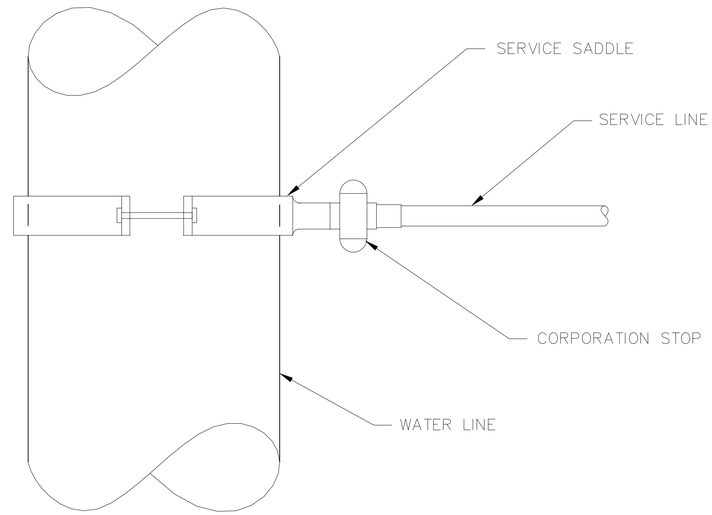


NOTE:

A MINIMUM DISTANCE OF 2'-0" IS REQUIRED FROM THE END OF THE CONNECTIONS AND MINIMUM DISTANCE OF 2'-0" IS REQUIRED BETWEEN SERVICE CONNECTIONS.

## SERVICE CONNECTION DETAIL-TYPICAL

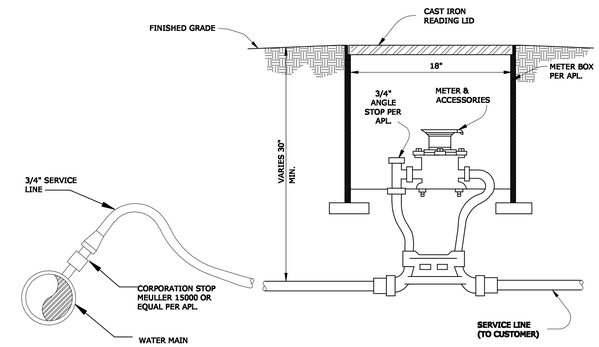


NOTE: METER BOXES SHALL NOT BE LESS THAN 18" DEEP AND SHALL BE PVC

## WATER SERVICE ASSEMBLY

5/8 X 3/4 METER

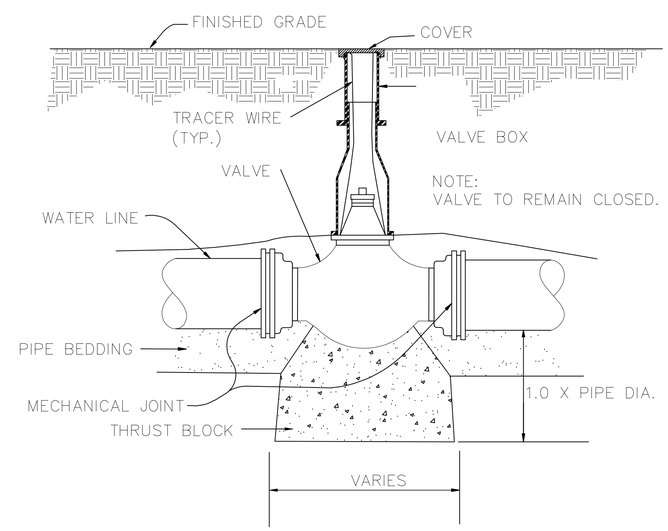


NOTE: THRUST BLOCK TO BE 24" PERPENDICULAR TO PIPE

## VALVE AND VALVE BOX

SURVEY BY: ---
DESIGNED BY: City of Cape
DRAWN BY: DEW
CHECKED BY: KG
SCALE: Not to Scale UN

| NO. | DATE | REVISIONS | BY |
|---|---|---|---|

# Standard Details for Water

Sheet 2 of 2

(This standard is current as of March 01, 2010)

CITY OF CAPE GIRARDEAU
401 INDEPENDENCE ST.
CAPE GIRARDEAU, MO. 63702
ENGINEERING DIVISION

The Original drawing is sealed and signed by Kelly Green P.E., City Engineer, May 27, 2010.

Water 2 of 2

JOB NO.
FIELD BOOK

U:\Dwg\ Wildcat\Water Standard Details\100802 as Plotted for Channel19 and 20 100301 Water Std 1 and 2.dwg, Water 2 of 2, 6/9/2010 2:25:51 PM

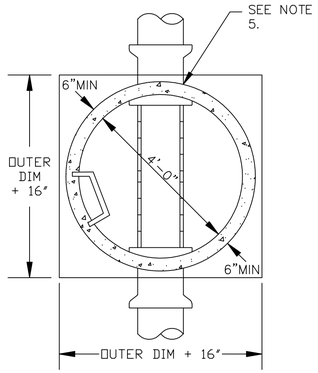


SECTION A–A

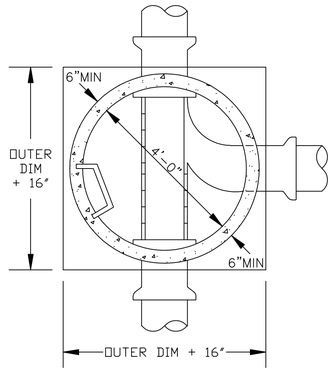


SECTION B–B

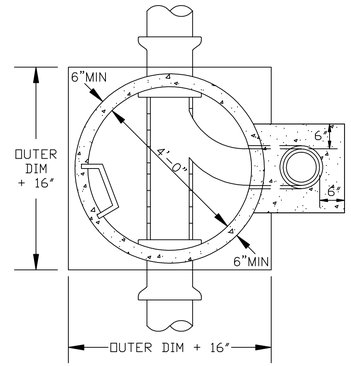


SECTION C–C

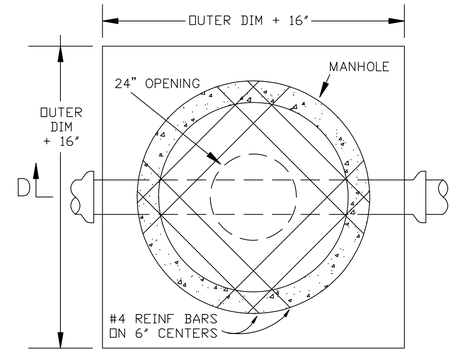


PLAN VIEW

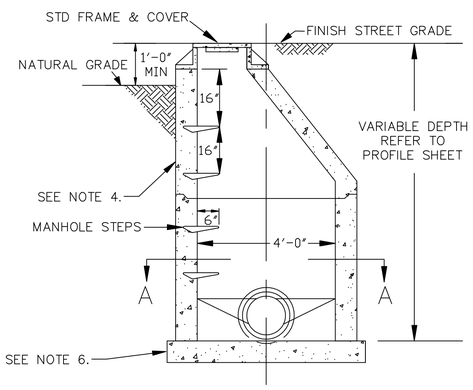


CROSS SECTION
STANDARD MANHOLE

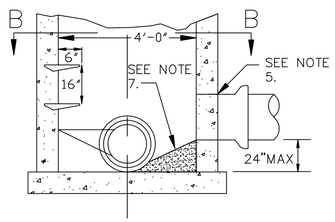


CROSS SECTION
DROP IN MANHOLE

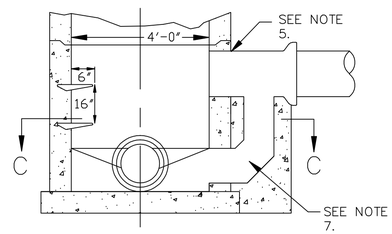


CROSS SECTION
DROP MANHOLE

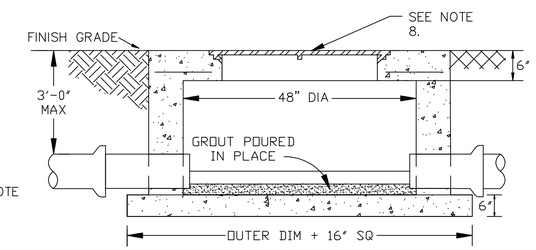


CROSS SECTION
SHALLOW MANHOLE

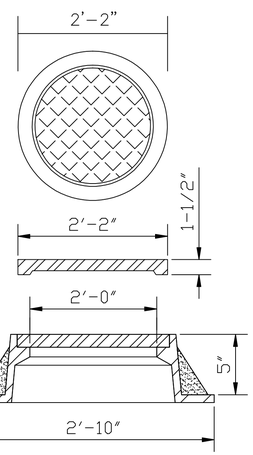


MANHOLE FRAME
AND COVER (SEE NOTE 8.)

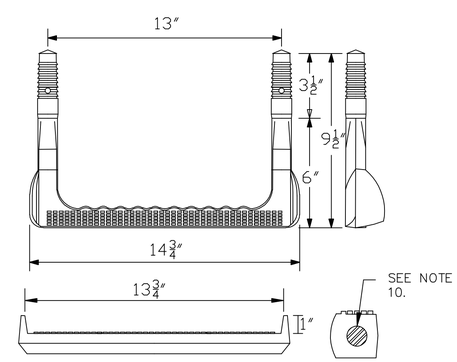


MANHOLE STEP (SEE NOTE 9.)

## Notes:

1. ALL WORK SHALL BE DONE IN ACCORDANCE WITH THE LATEST EDITION OF THE CITY OF CAPE GIRARDEAU STANDARD DETAILS AND SPECIFICATIONS
2. CONCRETE SHALL HAVE 28 DAY MINIMUM STRENGTH OF 4000 PSI.
3. REINFORCEMENT STEEL PER APL.
4. ASPHALT WATERPROOFING PER APL.
5. GROUT PIPE OPENING WITH A–LOCK PRODUCT.
6. IF MANHOLE DEPTH IS 0' TO 8', BASE SLAB SHALL BE 8" THICK. IF MANHOLE DEPTH IS 8' TO 12', BASE SLAB SHALL BE 10" THICK. IF MANHOLE DEPTH IS 12' AND ABOVE, BASE SLAB SHALL BE 12" THICK.
7. USE DROP–IN MANHOLE, IF ELEVATION DIFFERENCE OF INFLOW AND OUTFLOW IS LESS THAN 2 FEET. USE OUTSIDE DROP MANHOLE, IF DIFFERENCE IS 2 FEET OR GREATER.
8. FRAME AND COVER PER APL.
9. MANHOLE STEPS PER APL.
10. POWDER EPOXY COATED STEEL REINFORCEMENT PER APL.
11. BOX OUT AROUND STRUCTURES IN PAVEMENTS SHALL NOT BE ALLOWED EXCEPT AS APPROVED BY CITY ENGINEER.
12. SEE SPECIFICATIONS FOR GRANULAR BEDDING.
13. BACKFILL BENEATH STREETS, PAVEMENTS, DRIVES, WALKS SHALL BE COMPACTED AT 95% OPTIMUM DRY DENSITY AS DETERMINED BY ASTM D698 MOISTURE–DENSITY STANDARD (PROCTOR) TEST.

SURVEY BY: --
DESIGNED BY: City of Cape
DRAWN BY: DEW
CHECKED BY: KG
SCALE: Not to Scale UN

| NO. | DATE | REVISIONS | BY |
|---|---|---|---|

# Standard Details for Sanitary Sewer

Sheet 1 of 3

(This standard is current as of March 01, 2010)

CITY OF CAPE GIRARDEAU
401 INDEPENDENCE ST.
CAPE GIRARDEAU, MO. 63702
ENGINEERING DIVISION

The Original drawing is sealed and signed by Kelly Green P.E., City Engineer, May 27, 2010.

Sewer 1 of 3

JOB NO.
FIELD BOOK

U:\Shared Wildlands\New Standard Details\100302 as Plotted for Drawer\100301 Sab Bar Rd 1and2.dwg, Sheet 1 of 2, 6/25/2010 2:10:41 PM

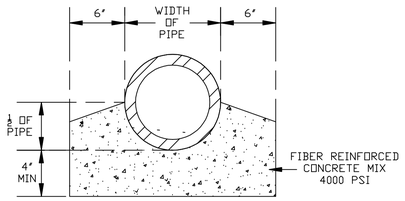


CONCRETE CRADLE

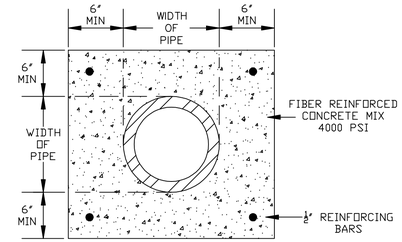


CONCRETE ENCASEMENT

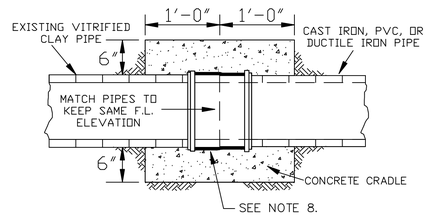


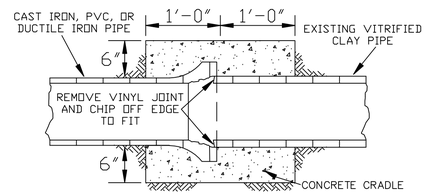


CONNECTION: CAST IRON, PVC OR DIP TO VCP

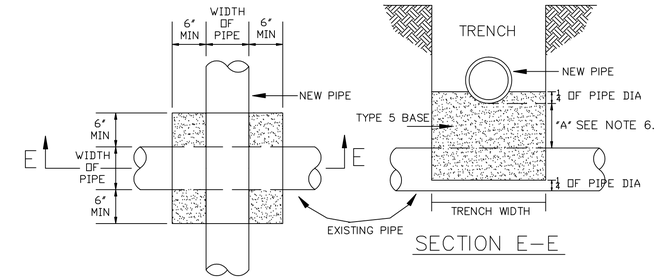


SECTION E-E

PIPE ENCASEMENT FOR NEW PIPE OVER EXISTING PIPE

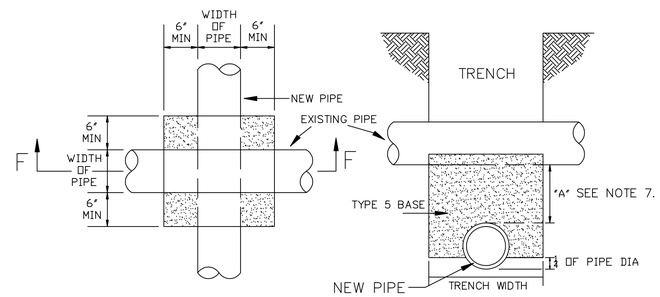


SECTION F-F

PIPE ENCASEMENT FOR NEW PIPE UNDER EXISTING PIPE

## Notes:

1. ALL WORK SHALL BE DONE IN ACCORDANCE WITH THE LATEST EDITION OF THE CITY OF CAPE GIRARDEAU STANDARD SPECIFICATIONS.
2. CONCRETE SHALL HAVE 28 DAY MINIMUM STRENGTH OF 4000 PSI.
3. SEE SPECIFICATIONS FOR GRANULAR BEDDING.
4. CLAY CUTOFF WALLS SHALL BE PLACED AT NO GREATER THAN 200' INTERVALS.
5. BACKFILL BENEATH STREET AND ALLEY PAVEMENTS, DRIVEWAYS AND SIDEWALKS SHALL BE PLACED AND COMPACTED PER CITY STANDARD DETAILS AND SPECIFICATIONS.
6. WHERE "A" IS GREATER THAN 12" NO CONCRETE ENCASEMENT IS REQUIRED.
7. WHERE "A" IS 12" OF GREATER USE STANDARD CONCRETE SEWER CRADLE ON EXISTING SEWER PIPE. WHERE "A" IS LESS THAN 12" USE PIPE ENCASEMENT AS SHOWN.
8. NEOPRENE ADAPTER BAND SHALL BE USED ON PIPES LESS THAN 12" IN DIAMETER. SEE APL.

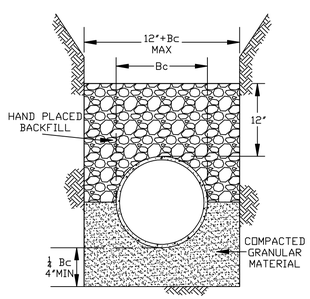


CLASS B
RIGID PIPE BEDDING
(SEE NOTE 3.)

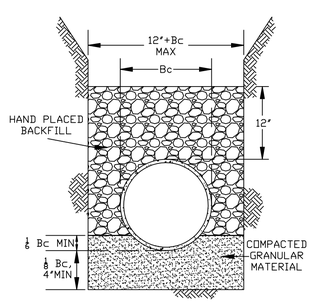


CLASS C
RIGID PIPE BEDDING
(SEE NOTE 3.)

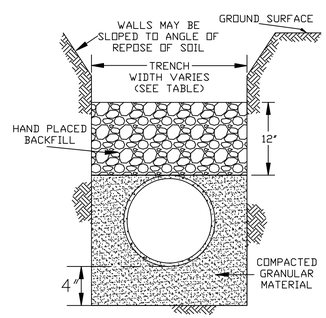


GRAVITY SEWER BEDDING
POLYVINYL CHLORIDE (PVC)
(SEE NOTE 3.)

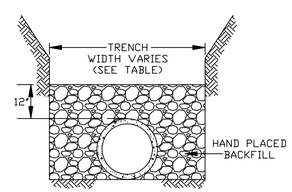


PRESSURE PIPE BEDDING
CAST IRON, DUCTILE IRON AND POLYVINYL CHLORIDE (PVC)
(SEE NOTE 3.)

| PIPE DIAMETER (IN) | TRENCH WIDTH (IN) | ½ Bc (IN) | ⅙ Bc (IN) | ⅛ Bc (4"MIN) |
|---|---|---|---|---|
| 4 | 18 | 4 | 1 | 4 |
| 6 | 18 | 4 | 1 | 4 |
| 8 | 24 | 4 | 1.5 | 4 |
| 10 | 26 | 4 | 2 | 4 |
| 12 | 30 | 4 | 2 | 4 |
| 15 | 30 | 4.5 | 2.5 | 4 |
| 18 | 36 | 5.5 | 3 | 4 |
| 21 | 36 | 6.25 | 3.5 | 4 |
| 24 | 42 | 7.25 | 4 | 4 |

SURVEY BY: --
DESIGNED BY: City of Cape
DRAWN BY: DEW
CHECKED BY: KG
SCALE: Not to Scale UN

| NO. | DATE | REVISIONS | BY |
|---|---|---|---|

# Standard Details for Sanitary Sewer
Sheet 2 of 3

(This standard is current as of March 01, 2010)

CITY OF CAPE GIRARDEAU
401 INDEPENDENCE ST.
CAPE GIRARDEAU, MO. 63702
ENGINEERING DIVISION

The Original drawing is sealed and signed by Kelly Green P.E., City Engineer, May 27, 2010.

Sewer 2 of 3

JOB NO.
FIELD BOOK

U:\Shared Workflows\New Standard Details\100302 as Plotted for Drawer\100301 Sim Bar Std 1and2.dwg, Sheet 2 of 2, 6/02/2010 2:11:39 PM

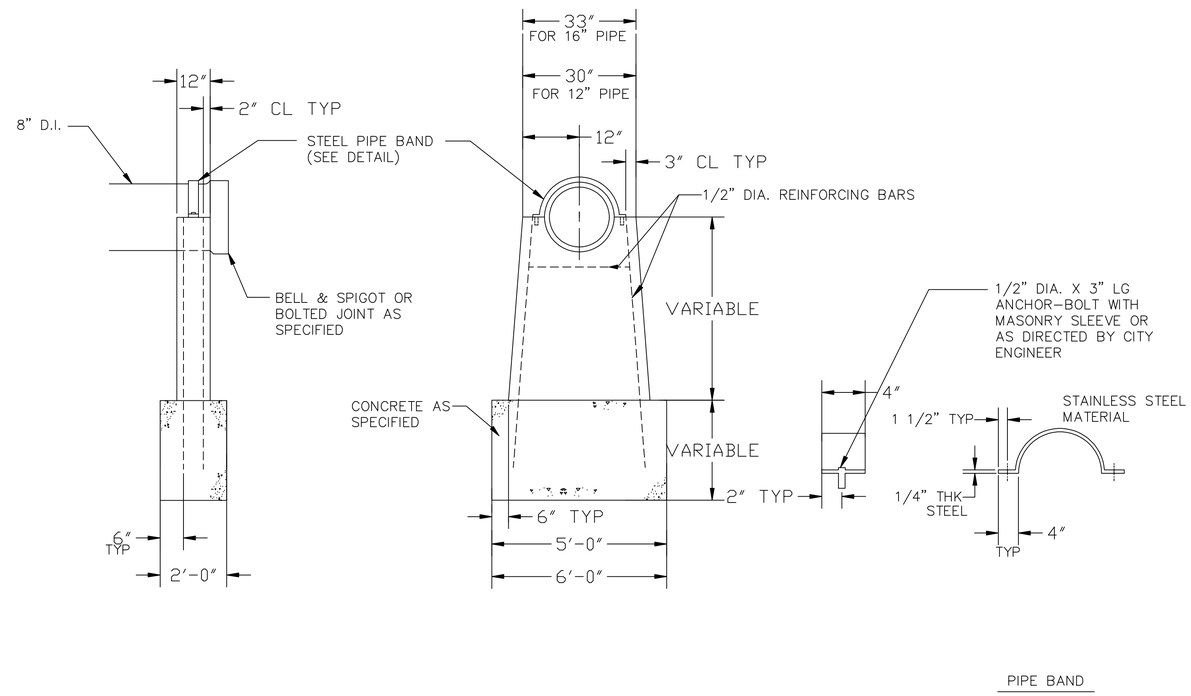


CONCRETE PIER

PIPE BAND

| NO. | DATE | REVISIONS | BY |
|---|---|---|---|

SURVEY BY: --
DESIGNED BY: City of Cape
DRAWN BY: DEW
CHECKED BY: KG
SCALE: Not to Scale UN

# Standard Details for Sanitary Sewer

Sheet 3 of 3

(This standard is current as of March 01, 2010)

CITY OF CAPE GIRARDEAU
401 INDEPENDENCE ST.
CAPE GIRARDEAU, MO. 63702
ENGINEERING DIVISION

The Original drawing is sealed and signed by Kelly Green P.E., City Engineer, May 27, 2010.

Sewer 3 of 3

JOB NO.
FIELD BOOK

U:\Dwnld Wildlife\New Standard Details\100302 as Plotted for Drawer\21 Rev 23 100301 Sam Bar 3\6 1 Rev 3.dwg, Layout1, 6/02/10 2:13:09 PM